Assembly instructions

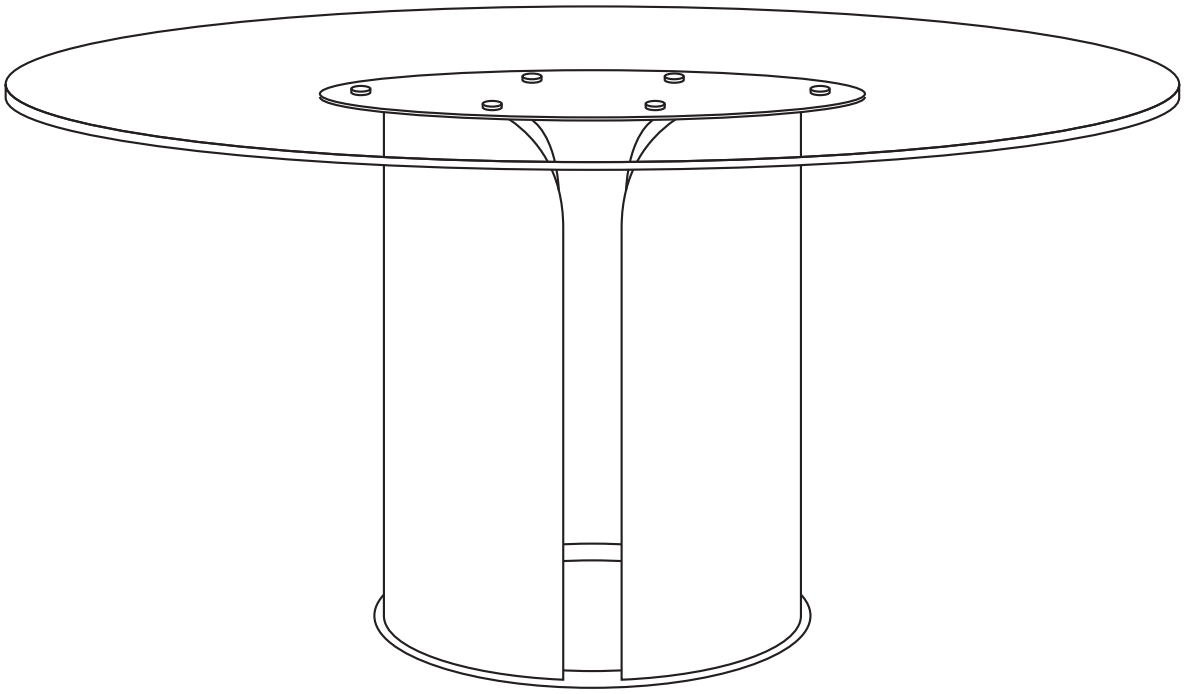

IMPORTANT:

PLEASE READ INSTRUCTION BEFORE STARING THE ASSEMBLY

Scan this QR code and watch our assembly tutorials

Or go to: https://youtu.be/q2mdckOnjOE

PLEASE DO NOT RETURN TO STORE



Please do not return this product to the retailer!!
We are able to assist you in ANY way

If you find that you have any trouble with assembly or missing or damaged parts please contact the seller.

Before Installation

Important-Please read these instructions fully before starting the assembly

Thank you for purchasing this quality product. Be sure to check all packing materials carefully for small parts,which may have come loose inside the carton during shipment. Identify and count all items according to the PARTS LIST and/or HARDWARE LIST shown below. Check you have all the components and tools listed on the following pages.

- We recommend that you assemble this product with the assistance of another person; this will make the assembly easier,and will help eliminate damage to the product or injury to persons during assembly.
- Please do not over tighten screws or bolts until the assembly is completed.
- Keep children and animal away from the work area,small parts could choke if swallowed.

Please put all parts on a non-abrasive floor before assembly,and follow the assembly steps to assemble your newly purchased product correctly and efficiently.

Parts List

No.	Sketch	Description	Qty
A		Desktop	1
B		Seat base	1

Hardware List

No.	Sketch	Description	Qty
①		Screw set	6
②		Wrench	1

Step 1:

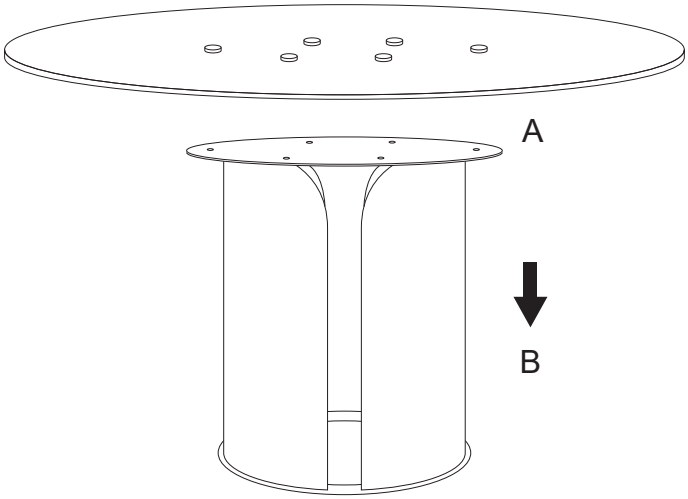

Step 2:

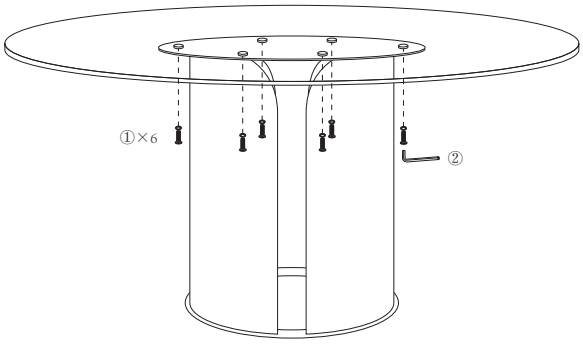

Step 3:

