Bed Frame

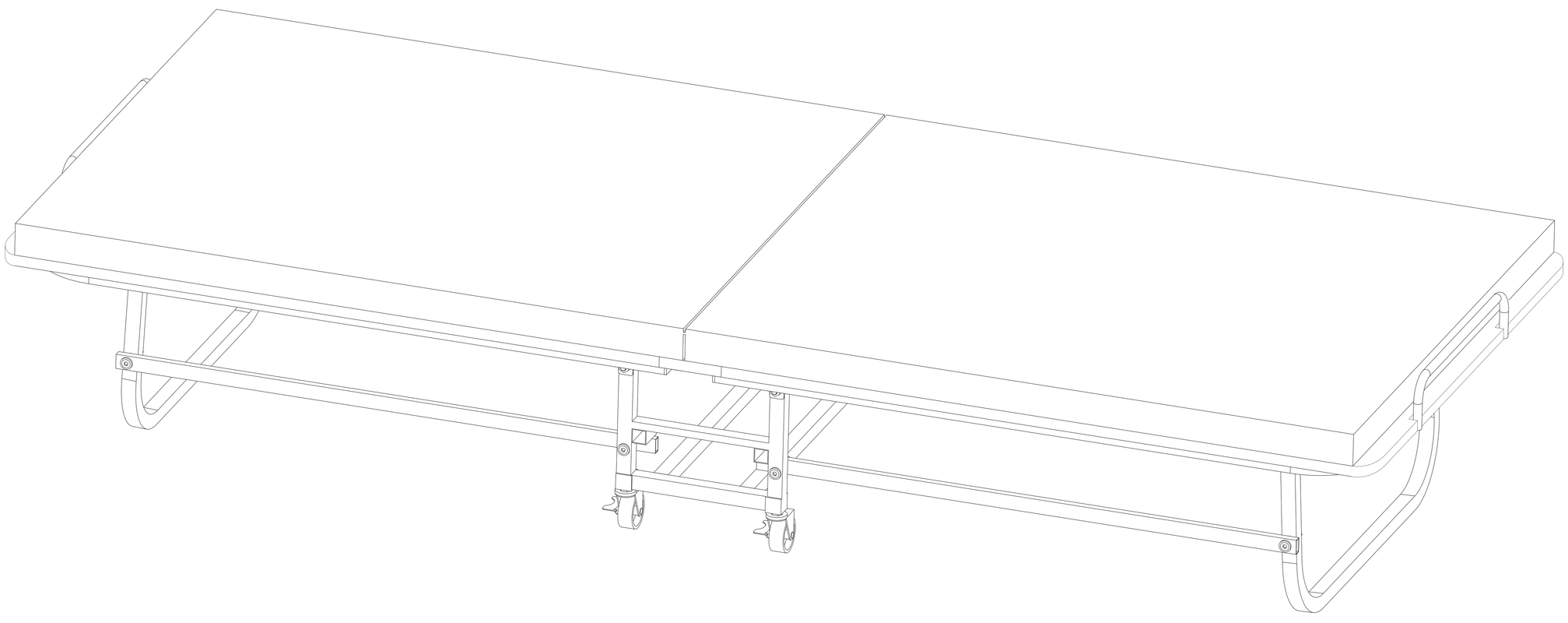

Model: T3963P447221

PRODUCT GUIDE AND INSTALLATION MANUAL

Parts List:

A 1pcs

B 4pcs

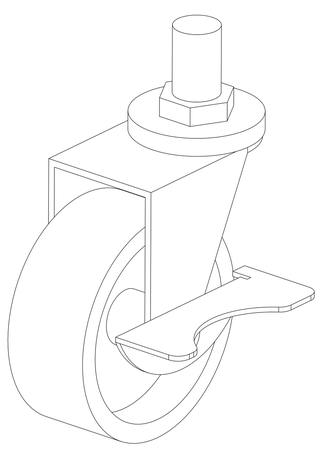

C 1pcs

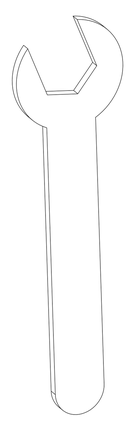

D 1pcs

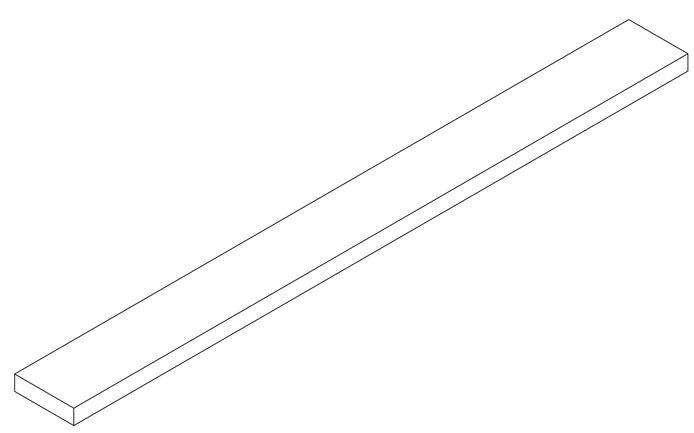

ASSEMBLY

Before your installation, please make sure that you have all the parts listed on the manual. If you find something missing, stop installing and contact your supplier immediately.

1

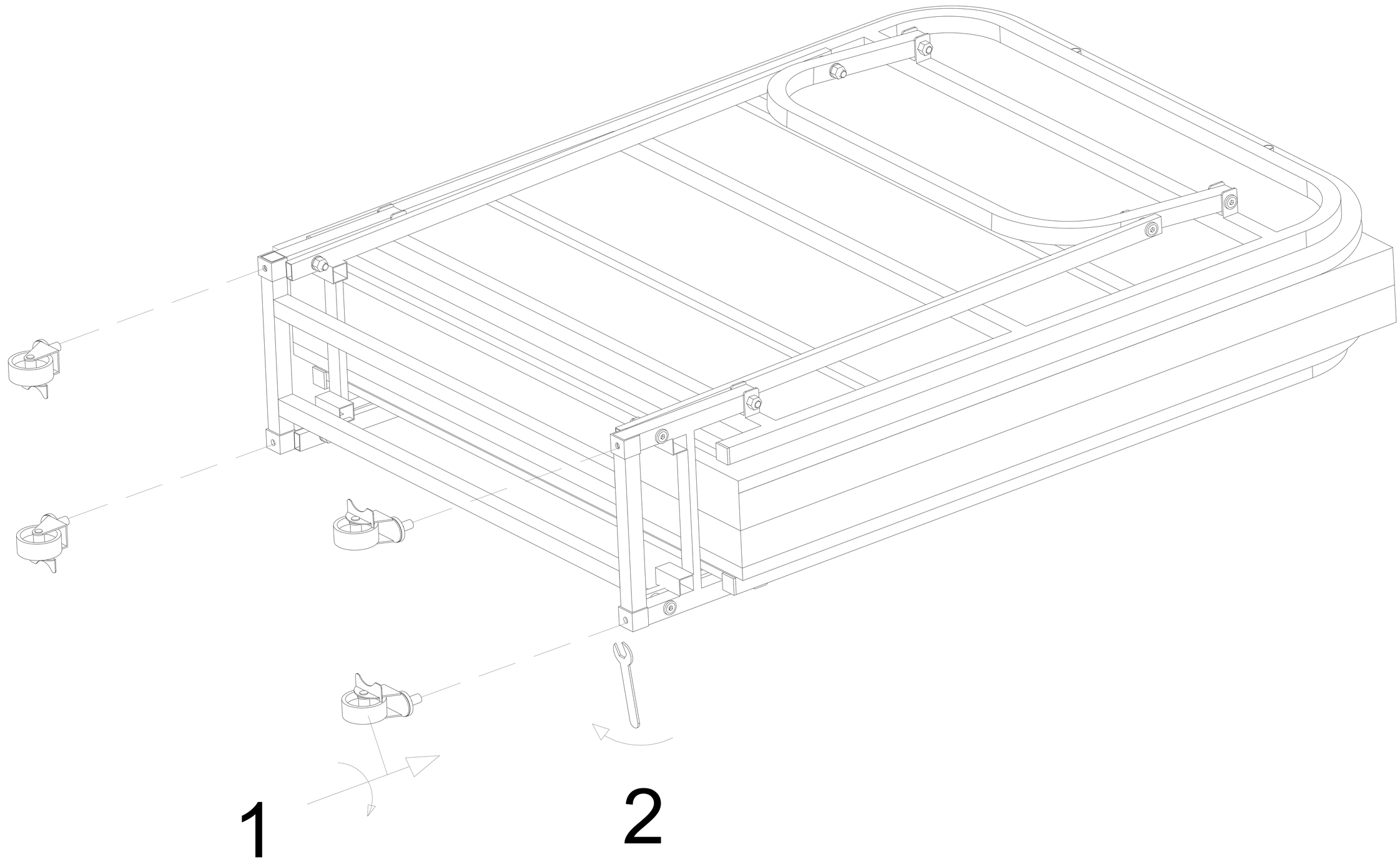

3

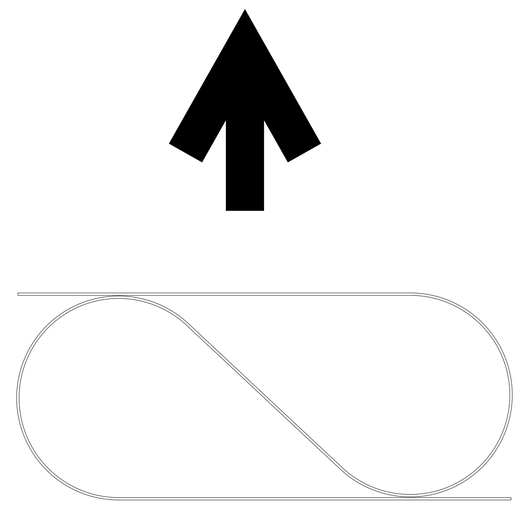

This tape can be used
for closing the bed
when it stored

2

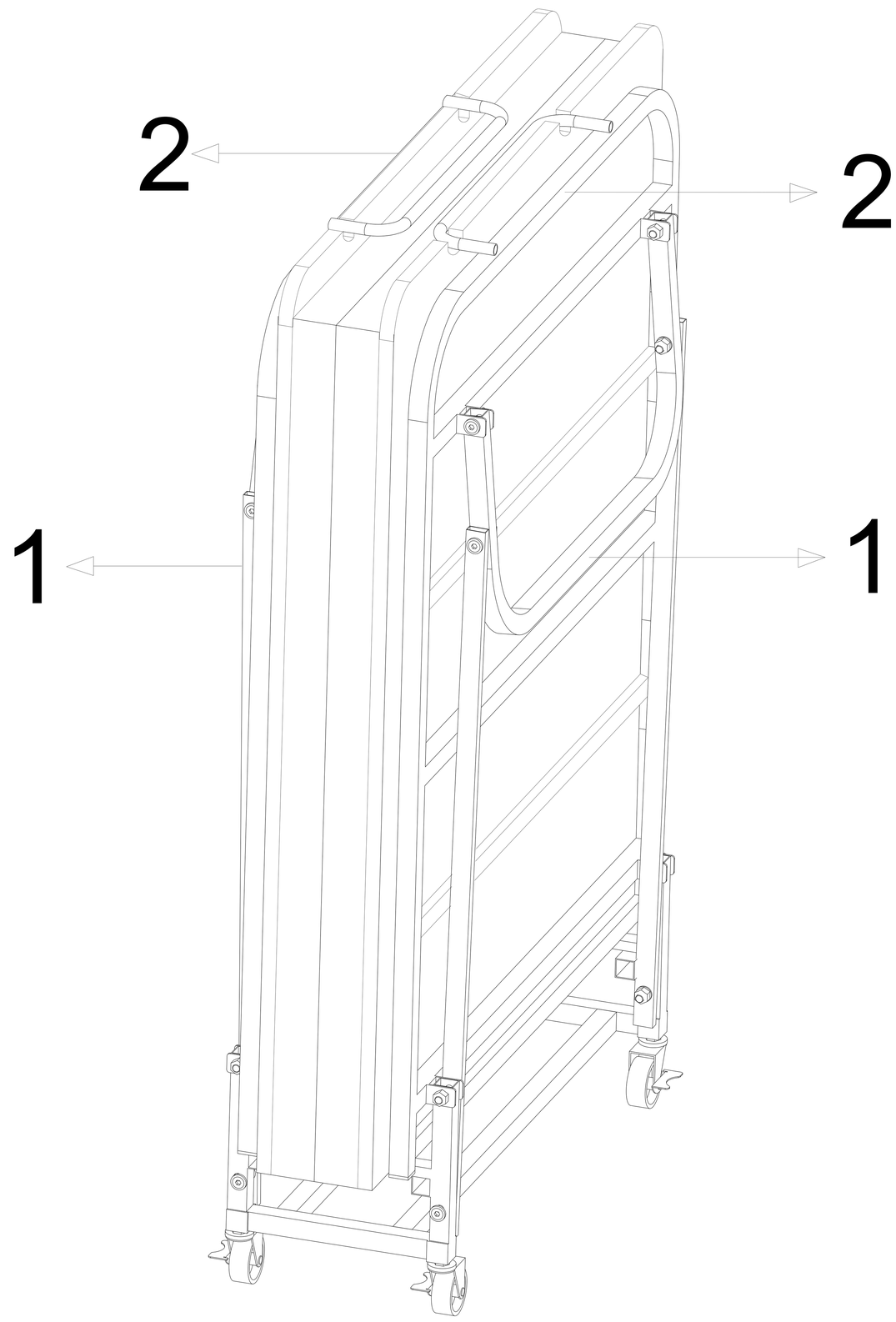

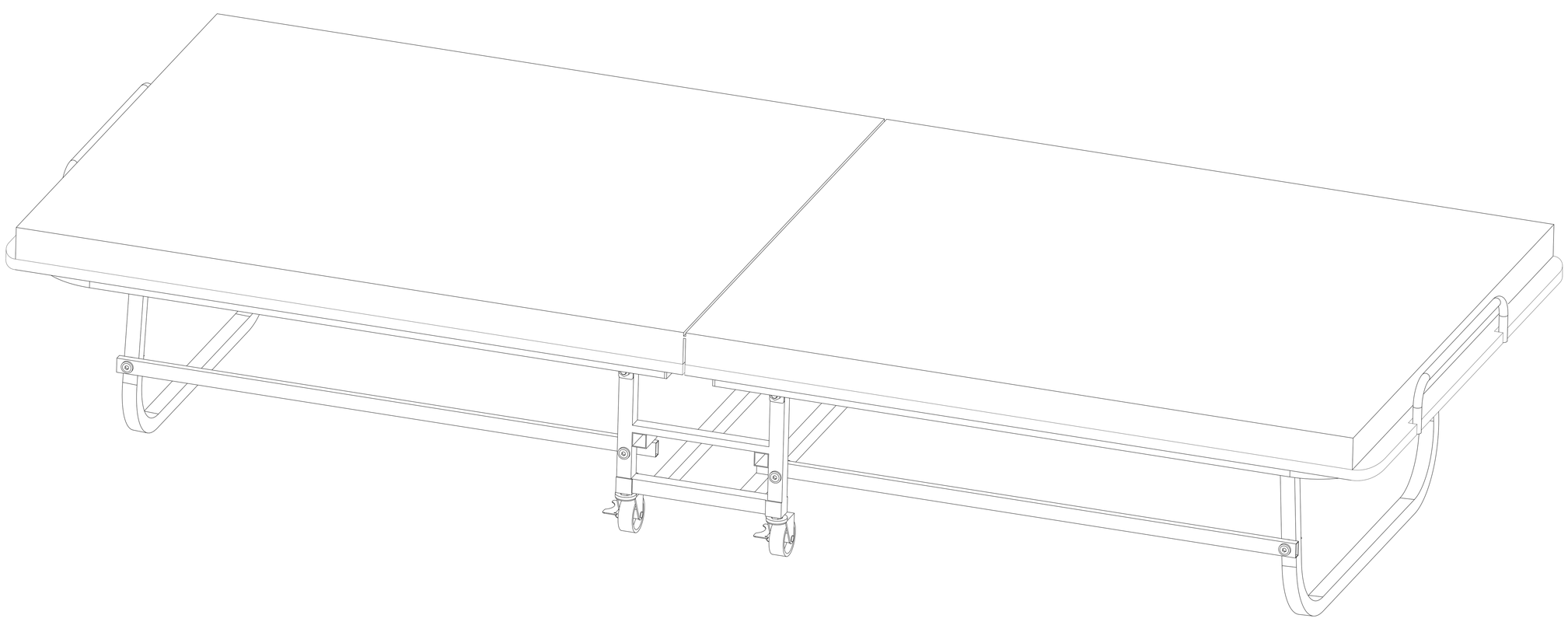

5

OPTION
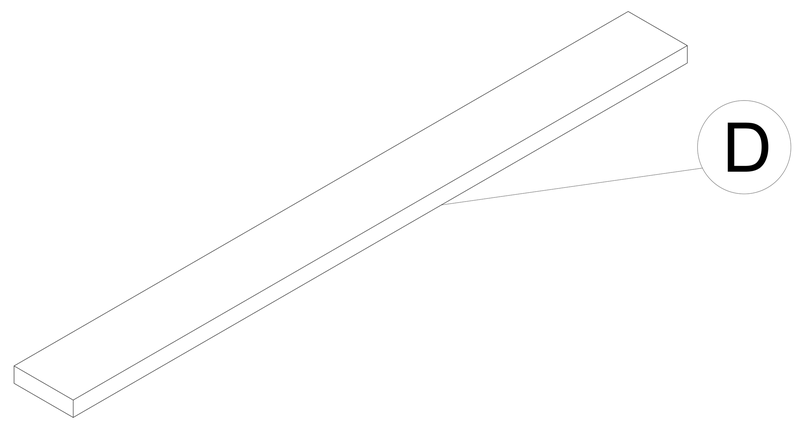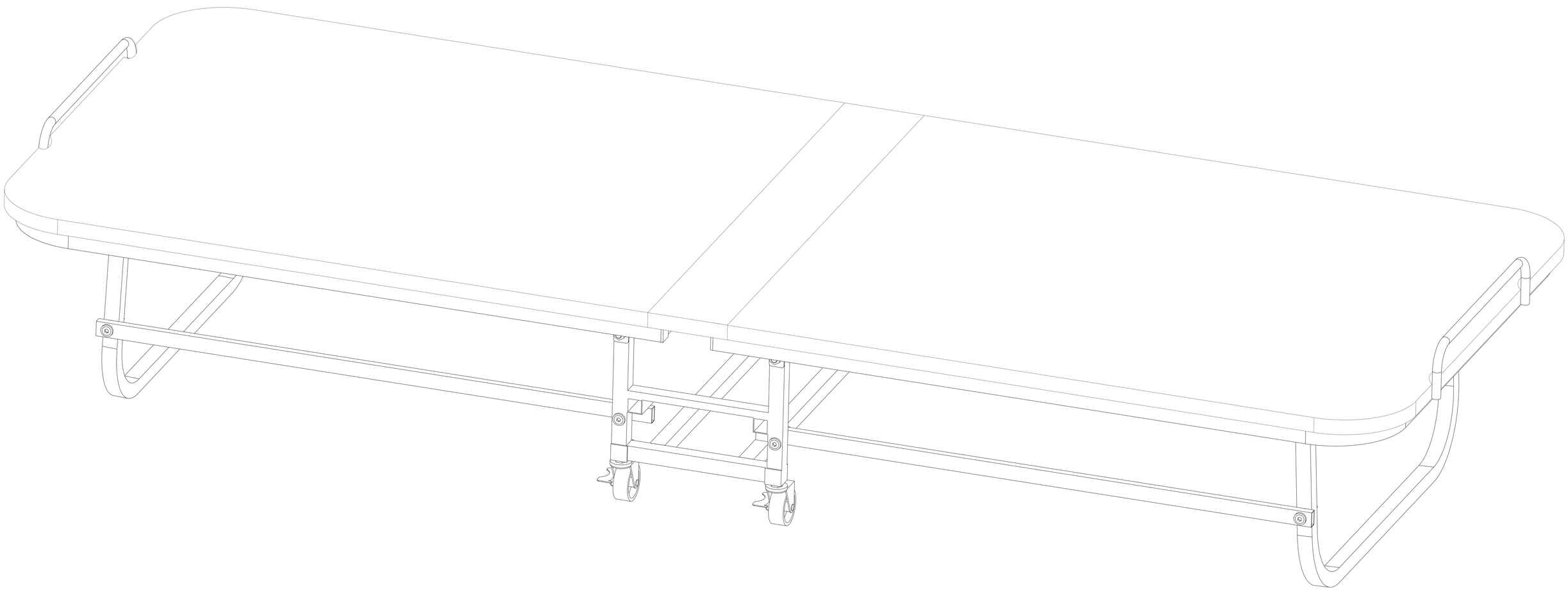
Put this on before placing the mattress.