148×210mm

ASSEMBLE INSTRUCTIONS

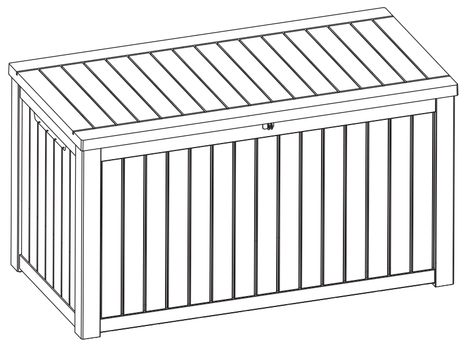

IMPORTANT

Once installed, the product cannot be detached. Strictly follow each step in the installation manual.

- Gather and organize all required parts prior to assembly. If you have any problems or discover any missing parts, please contact customer service.
- Some parts may contain sharp edges. Wear protective gloves if necessary during assembly.

CARE & SAFETY

- Assemble on a flat, clean and soft surface.
- In case of fire, do not attempt to extinguish any burning polypropylene with water.
- Wear safety-goggles and always follow the manufacturer's instructions when using power tools.
- During installation, please refer to the accessories guide to ensure that they are installed in the correct directions.
- Do not stand on the lid.

PARTS LIST

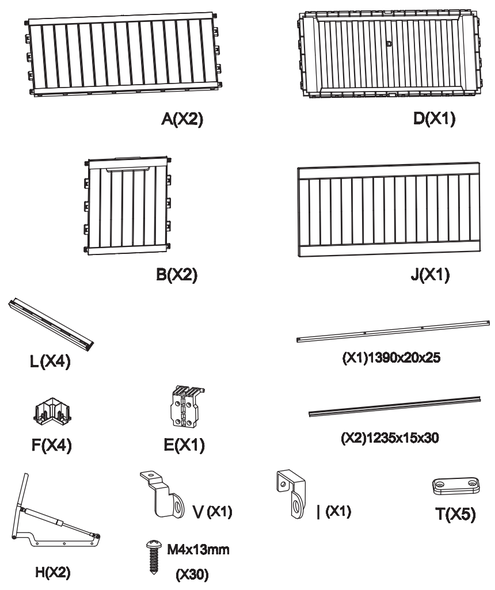

L(X4) packed in carton2-2, may not be delivered at the same time, please wait for all the parts to arrive before starting assembly.

1 A(X2) (X2)1235x15x30 T(X4) M4x13mm (X8)

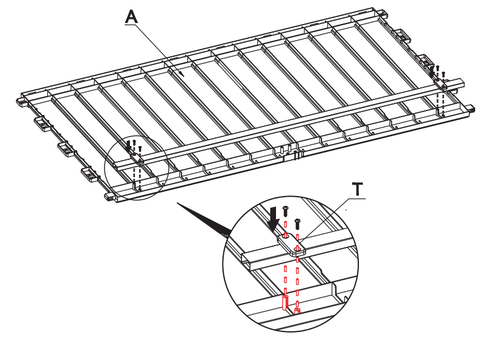

X2

2 D(X1)

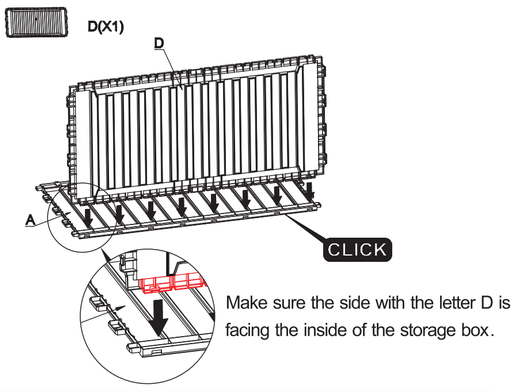

Make sure the side with the letter D is facing the inside of the storage box.

3

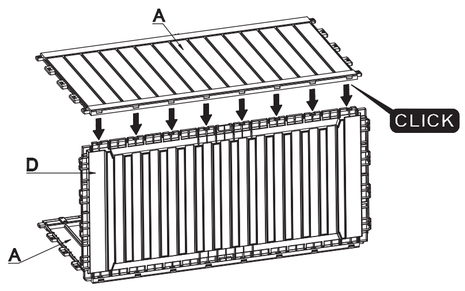

4 B(X2) L(X4)

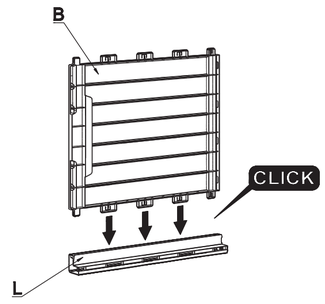

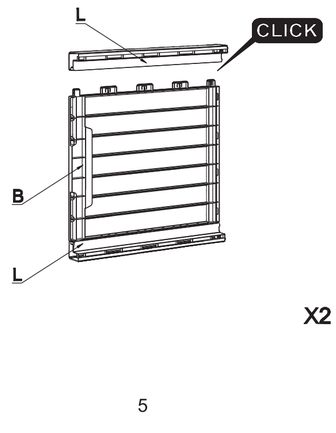

X2

5

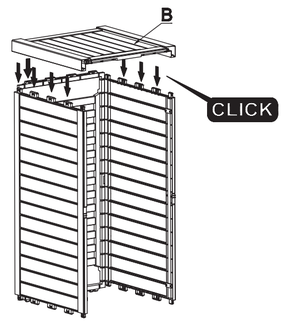

6

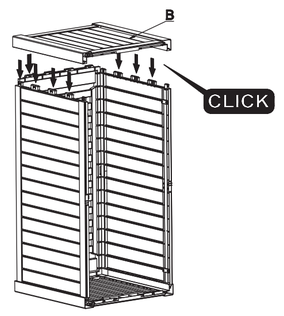

7 F(X4)

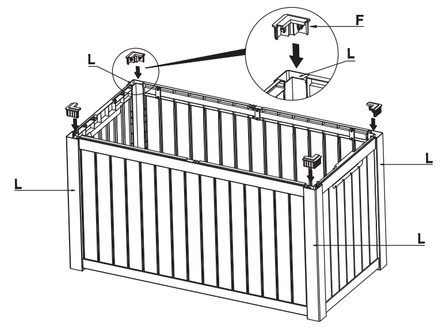

8 T(X1) M4x13mm (X2)

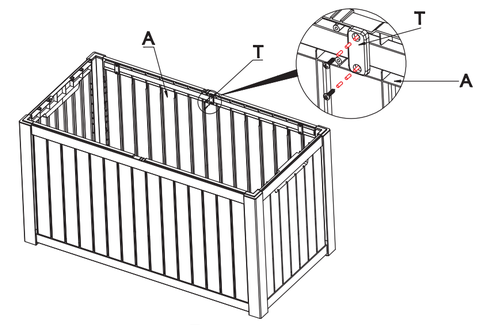

9 I (X1) M4x13mm (X1)

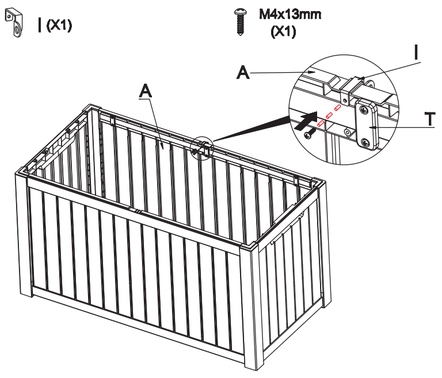

10 J(X1) (X1)1390x20x25 M4x13mm (X4)

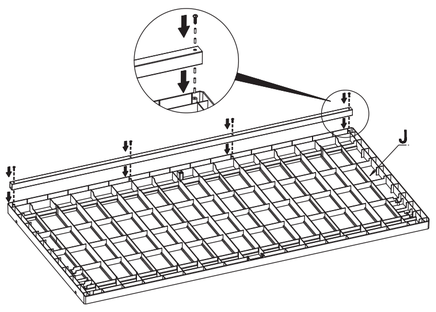

11 V (X1) E(X1) M4x13mm (X1)

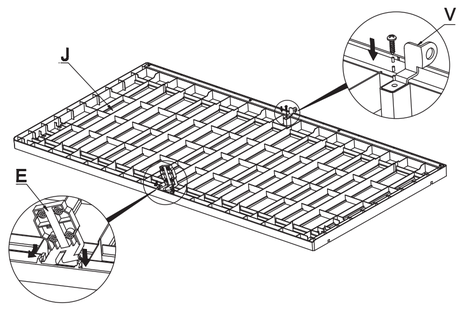

12 H(X2) M4x13mm (X4)

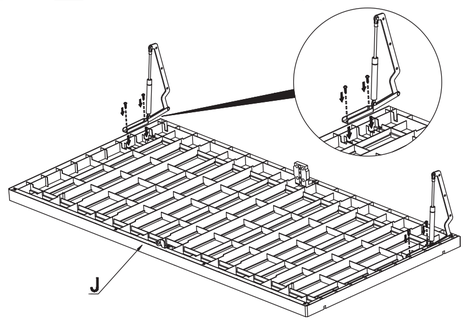

13 M4x13mm (X10)

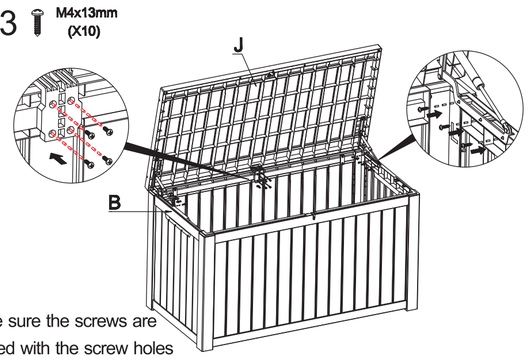

Make sure the screws are aligned with the screw holes and tighten them all.

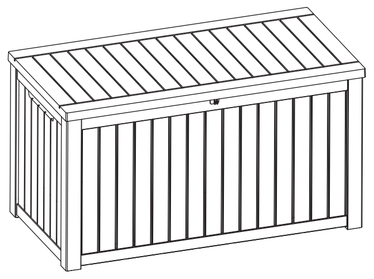

148A