ASSEMBLY INSTRUCTIONS
BOOKCASE

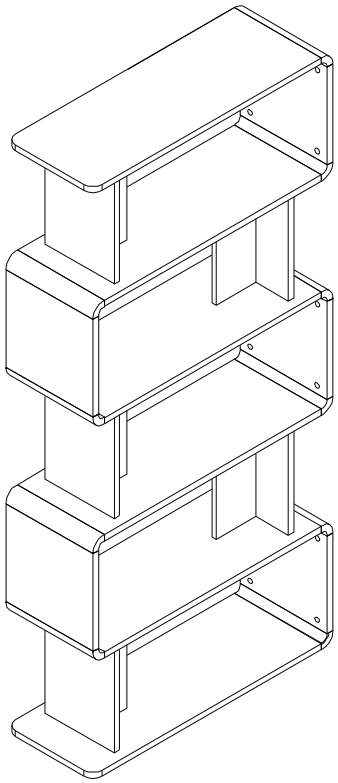

NOTE TO CUSTOMERS:

- For ease and speed of assembly we recommend that before you commence each step of the assembly that you identify all the parts required to complete that step.
- We recommend that where possible you allow sufficient space to assemble the item as close as possible to the place where it will be once assembled.
- For the protection of your furniture we recommend that the product is placed on a dry, soft, smooth and clean surfaces during assembly to prevent any damage. Avoid damp and direct sunlight.
- During assembly do not over tighten the screws or bolts, as this may damage the product.
- Please ensure you retain all the product packaging until the item is completely assembled.
- Periodically check all fitting and re-tighten as necessary.
- Never allow any liquids to remain on your furniture as absorption can cause the wood to warp or finish to de-laminate.
- It is recommended that this item should be assembled by two adults.

ASSEMBLY INSTRUCTIONS

PARTS IDENTIFICATION

P1 Quantity: 1	P2 Quantity: 1	P3 Quantity: 4	P4 Quantity: 5	P5 Quantity: 5
Top Shelve	Base Panel	Middle Shelve Panel	Vertical Panel	Side Panel
P6 Quantity: 10	P7 Quantity: 3	P8 Quantity: 2	Tools required:	
Corner Connector	Right Support Panel	Left Support Panel	MALLET	HOUSEHOLD SCREWDRIVER

HARDWARE LIST

H1 Screw #9 x 1 1/2" Ø 11/64" 1 1/2"	H2 Connecting Bolts	H3 Cam Lock 15 x 12.5mm	H4 Wooden Dowel M8 x 25 Ø 5/16" 1"	H5 Sticker
Quantity: 15 pcs	Quantity: 55 pcs	Quantity: 55 pcs	Quantity: 60 pcs	Quantity: 55 pcs
H6 Leg Stud	H7 Screw for anti-tip M3.5 x 16 Ø 1/8" 5/8"	H8 Anti-tip web strip	H9 Screw for mount to wall #6 x 1 1/4" Ø 9/64" 1 1/4"	H10 Wall plug for Screw H9
Quantity: 6 pcs	Quantity: 1 pc	Quantity: 1 pc	Quantity: 1 pc	Quantity: 1 pc

STEP 1 *Insert wooden dowels (H4) into the following parts, Use a mallet to knock the dowels until they are snug in the hole.*

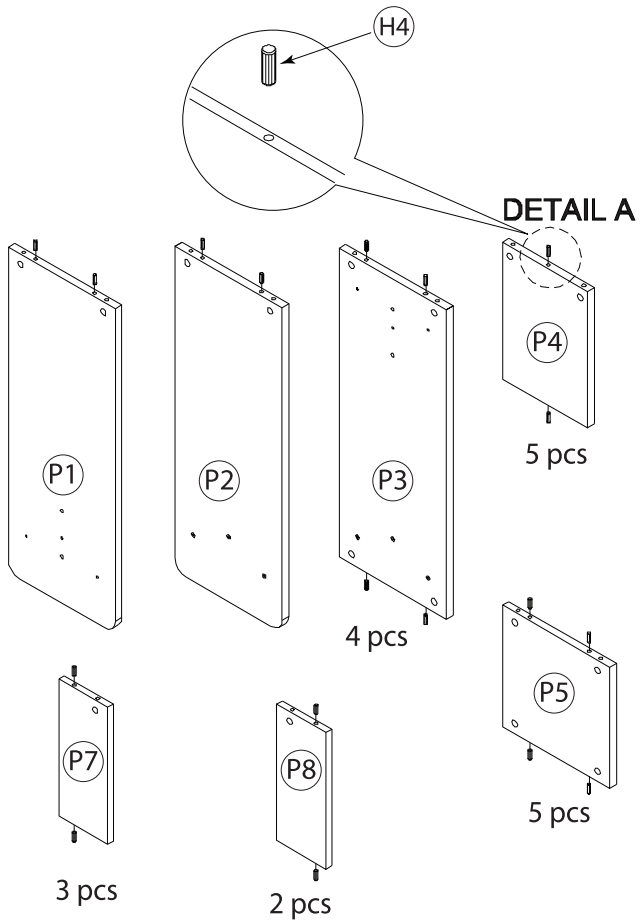

STEP 2 *Align the Connecting Bolt (H2), use a household Philip Screwdriver to drive the bolt until it is snug.*

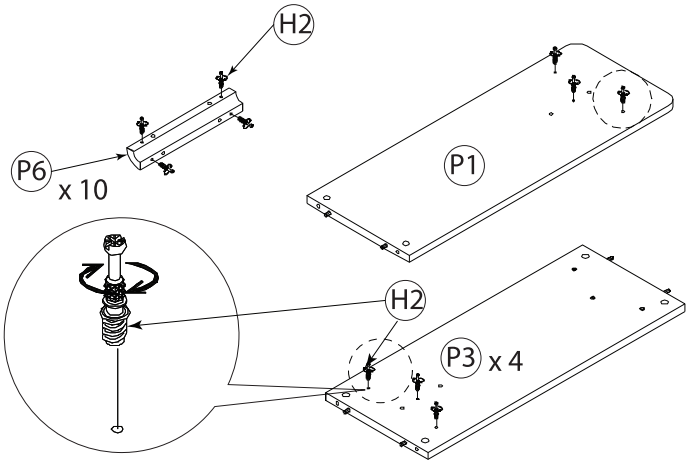

STEP 3 *Attach the Corner Connector (P6) to both ends of the Panel (P5). Repeat the assembly for another four similar parts.*

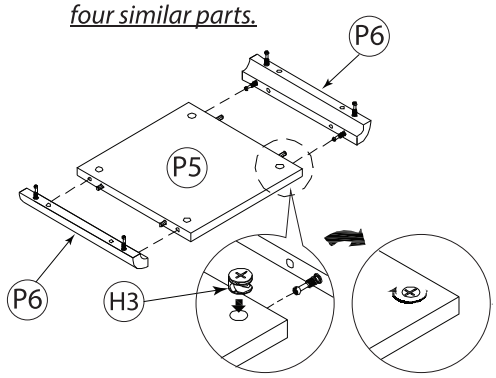

Align the Camlock (H3) & use a screwdriver to turn it to locked position when it is connected to the bolt.

ASSEMBLY INSTRUCTIONS

STEP 4

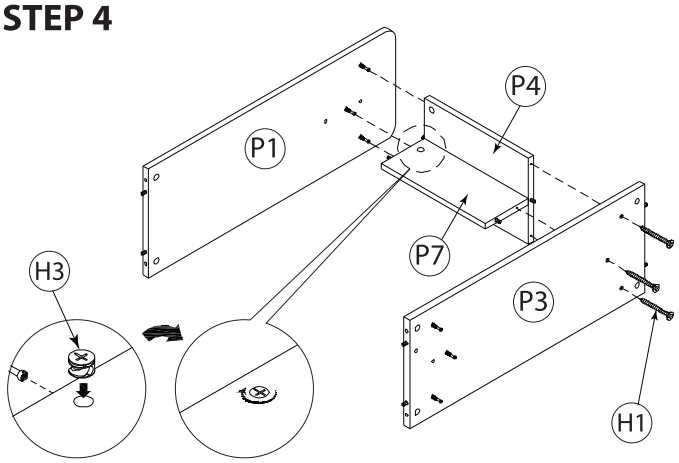

Align the Camlock (H3) & use a screwdriver to turn it to locked position when it is connected to the bolt.

STEP 5

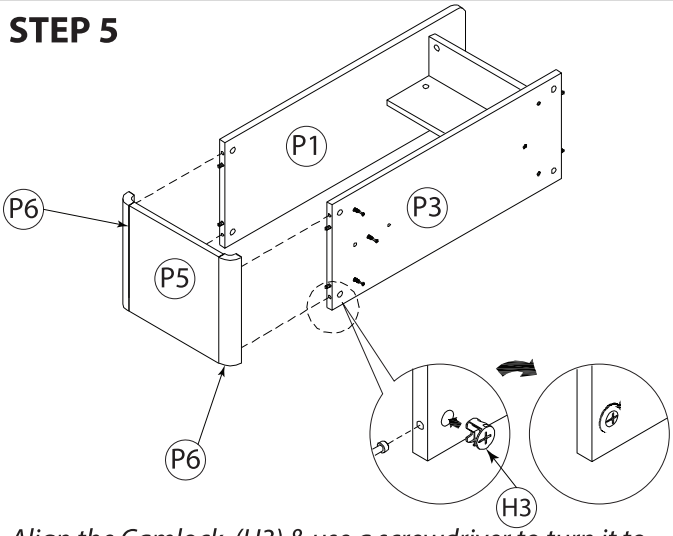

Align the Camlock (H3) & use a screwdriver to turn it to locked position when it is connected to the bolt.

STEP 6

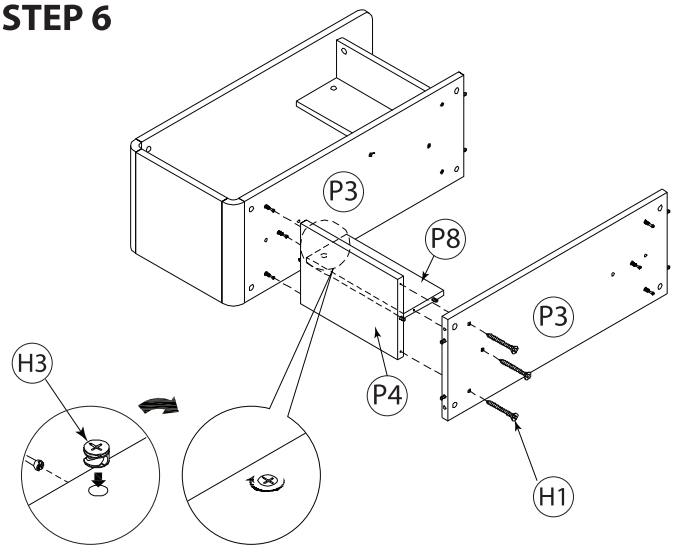

Align the Camlock (H3) & use a screwdriver to turn it to locked position when it is connected to the bolt.

STEP 7

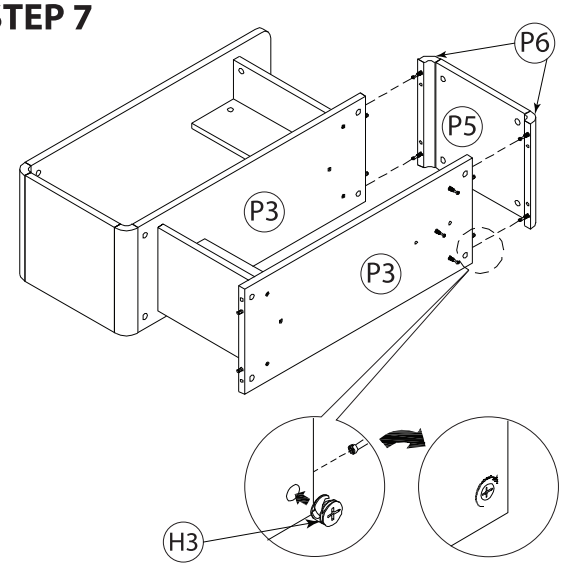

Align the Camlock (H3) & use a screwdriver to turn it to locked position when it is connected to the bolt.

STEP 8

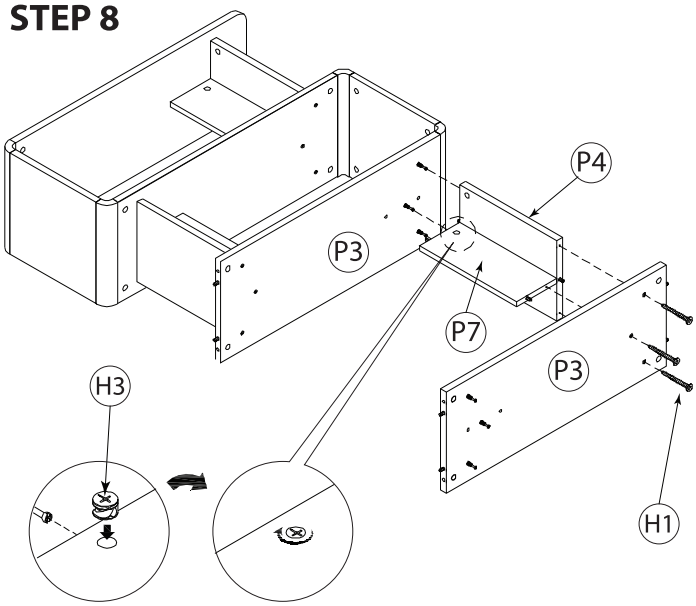

Align the Camlock (H3) & use a screwdriver to turn it to locked position when it is connected to the bolt.

STEP 9

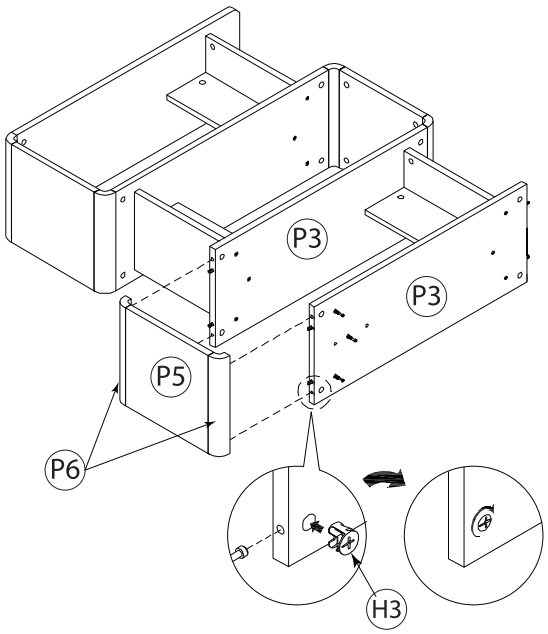

Align the Camlock (H3) & use a screwdriver to turn it to locked position when it is connected to the bolt.

ASSEMBLY INSTRUCTIONS

STEP 10

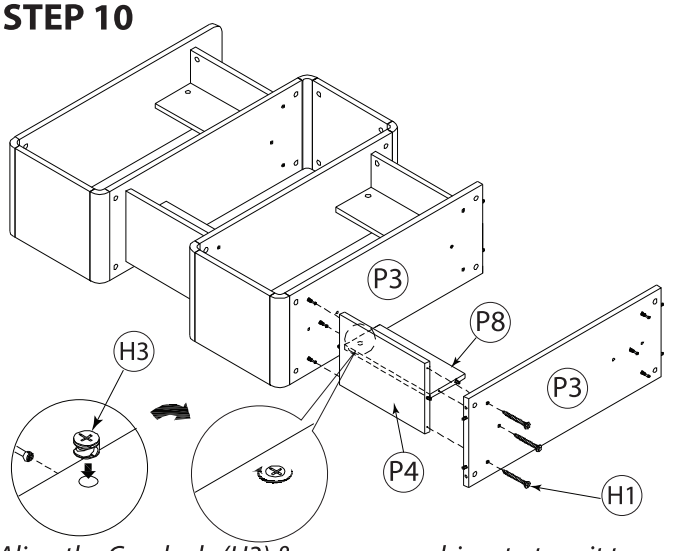

Align the Camlock (H3) & use a screwdriver to turn it to locked position when it is connected to the bolt.

STEP 11

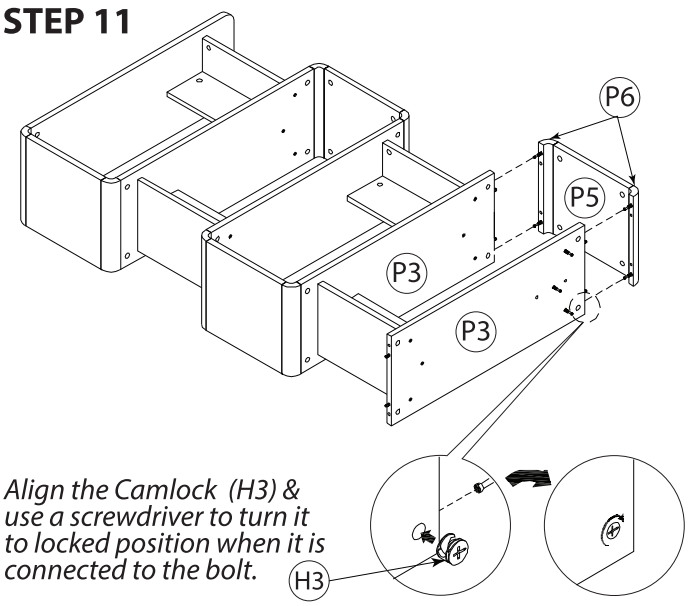

Align the Camlock (H3) & use a screwdriver to turn it to locked position when it is connected to the bolt.

STEP 12

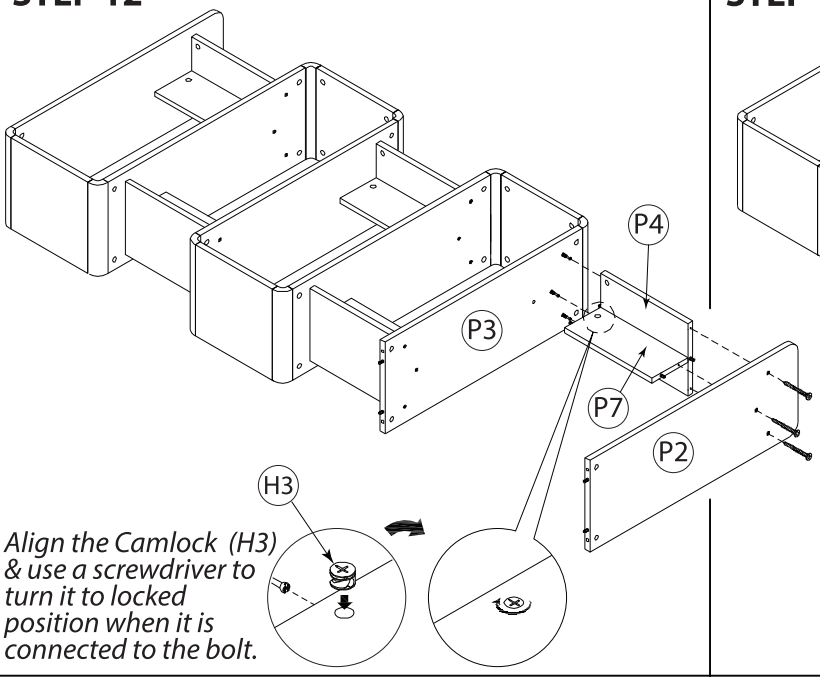

Align the Camlock (H3) & use a screwdriver to turn it to locked position when it is connected to the bolt.

STEP 13

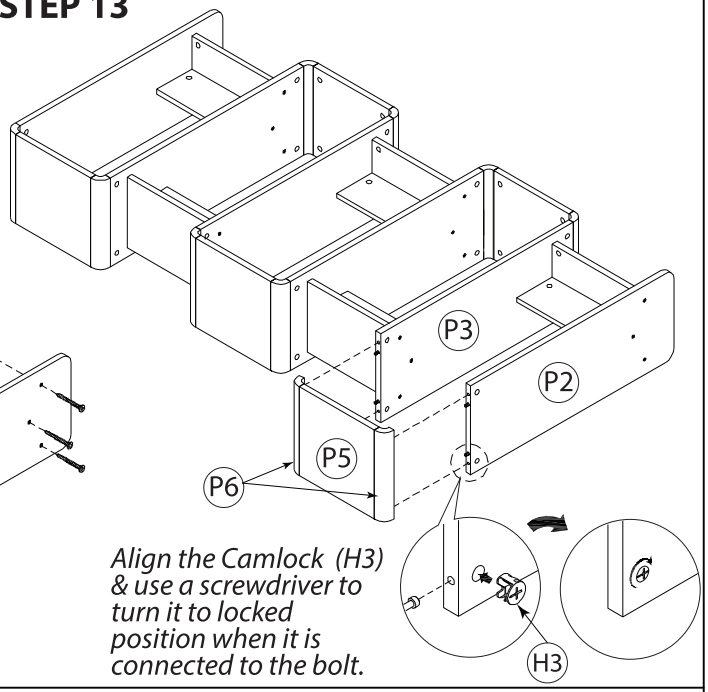

Align the Camlock (H3) & use a screwdriver to turn it to locked position when it is connected to the bolt.

STEP 14

Tap the Leg Stud (H6) to the underside of (P2) with a mallet untill it firmly fits on the panel.

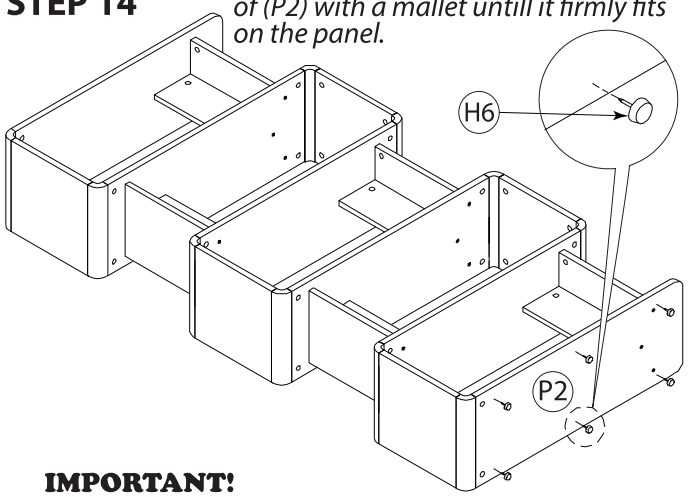

STEP 15

Install these Tip-Over Restraint fittings to avoid severe tip-overs of the unit.

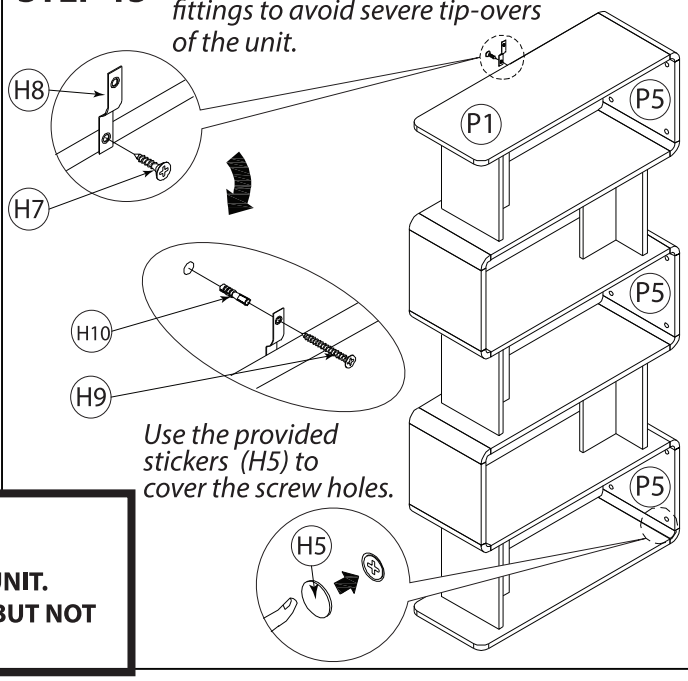

Use the provided stickers (H5) to cover the screw holes.

IMPORTANT!

ANCHOR THE UNIT TO THE WALL TO AVOID TIPPING.
PLACE THE HEAVIEST ITEMS IN THE LOWEST SHELVES.
NEVER ALLOW CHILDREN TO STAND OR CLIMB ON THE UNIT.
THE USE OF TIP-OVER RESTRAINTS MAY ONLY REDUCE, BUT NOT ELIMINATE,THE RISK OF TIP-OVER.