Owner Manual

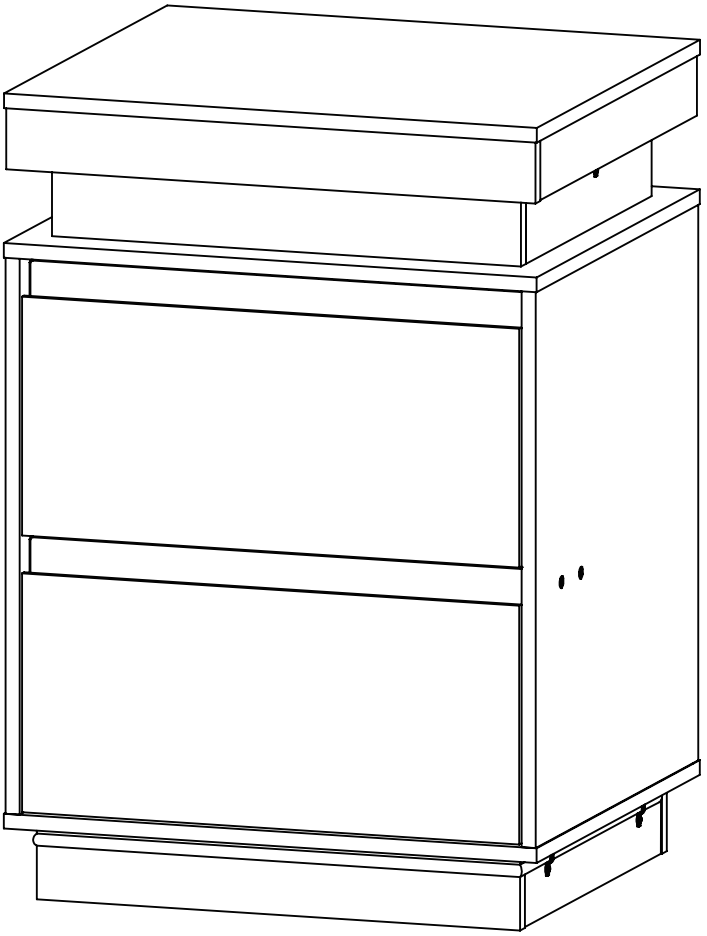



V5.5.0

NightStand

IMPORTANT INFORMATION
READ CAREFULLY.
KEEP THIS INFORMATION FOR FURTHER REFERENCE.

GENERAL GUIDELINES

Please read the following instruction carefully and use the product accordingly.
Please keep this manual and hand it over when you transfer the product.
This summary may not include every detail of all variations and considered steps.
Please contact us when further information and help are needed.



NOTES

Please follow the assembly instructions precisely and only use the product as intended.

If an odor is present when first opening the package, please leave the unwrapped product in a shaded and ventilated area for a few days to air out.Please follow the assembly instructions precisely and only use the product as intended.

Prior to assembly, please check the product for defects or missing accessories. If any defects are found or accessories are missing, do not use product as damage or injury may occur;
Please contact us for assistance and replacement.

It is suggested you regularly check the products bolts and connections to ensure safe use.

Assemble the item on a soft flat and clean surface to avoid scratches and damage.

It is recommended that two people assemble this product.During assembly, please only slightly tighten all screws in their correct position first, then fully tighten them. A Philips screwdriver is recommended but not included.

WARNINGS

During assembly, keep parts and packaging materials away from children and pets as there could cause injury and are a potential choking hazard.

Avoid sharp objects or corrosive chemicals to prevent damage to the product.

Please open the item slowly and cautiously to avoid pinching your hands by metal joints, especially children.

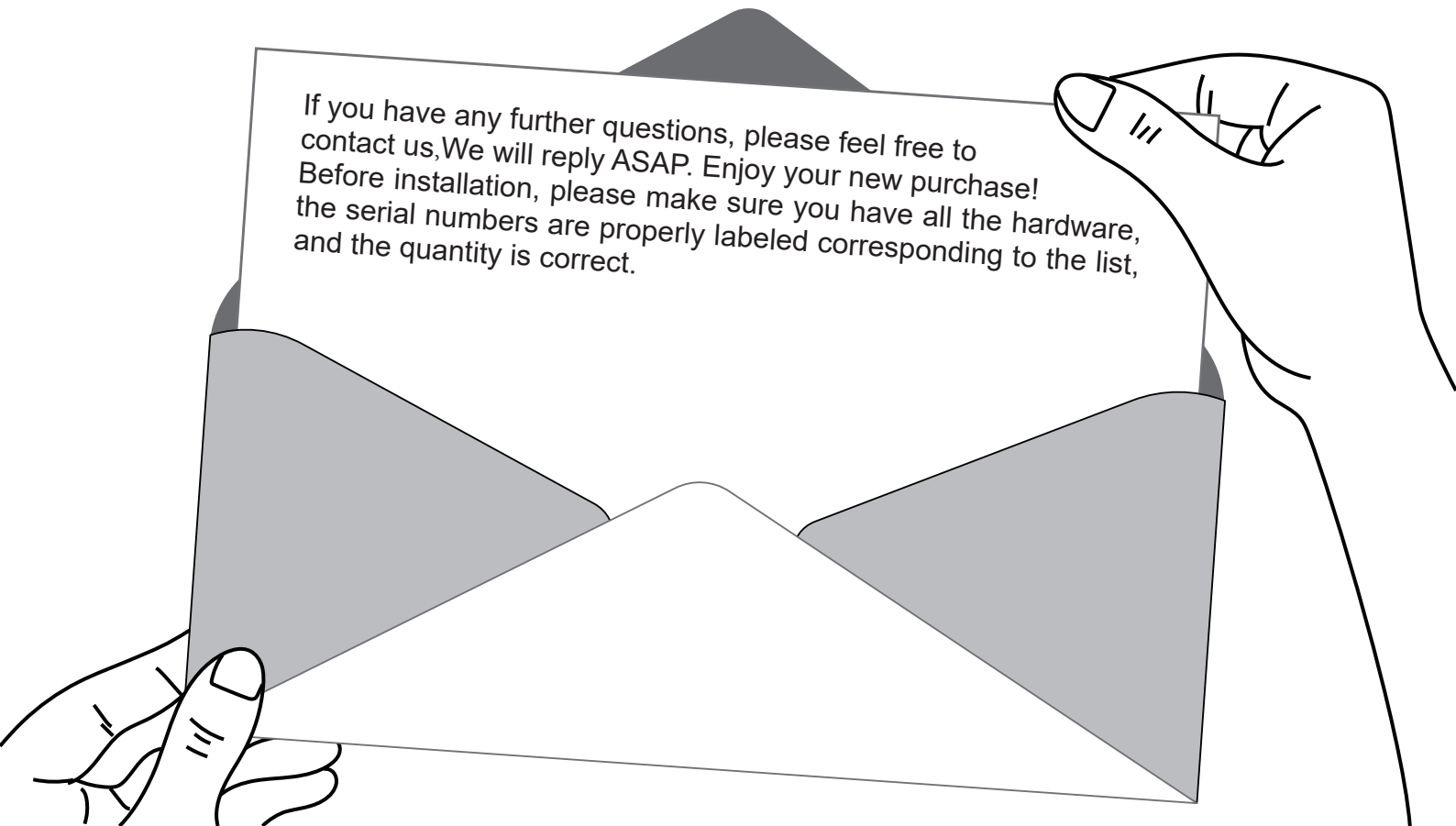

INSTRUCTIONS

❶

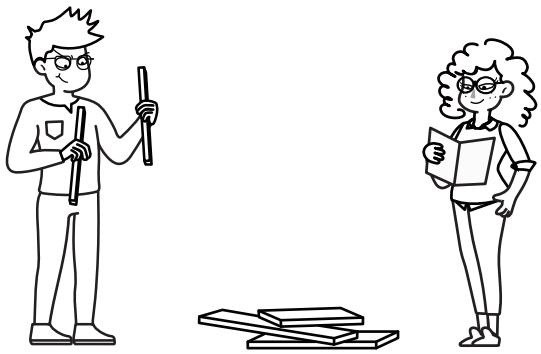

❷

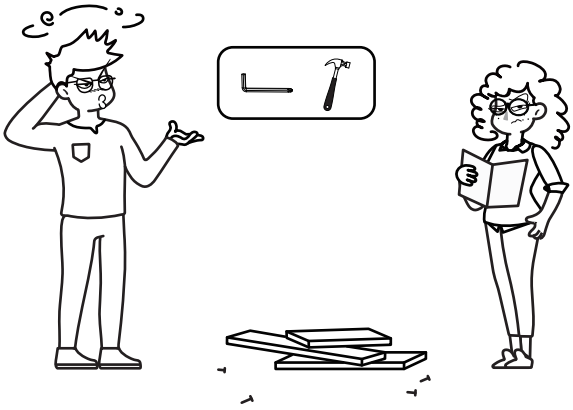

❸

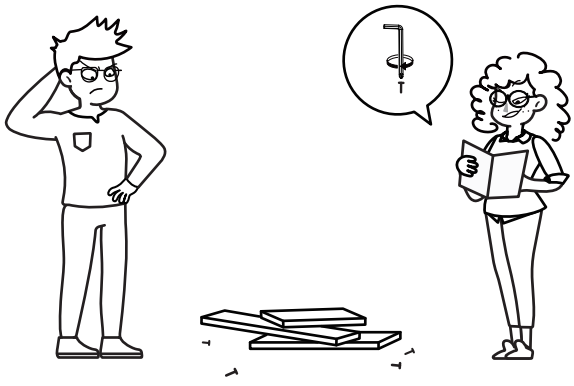

❹



❺

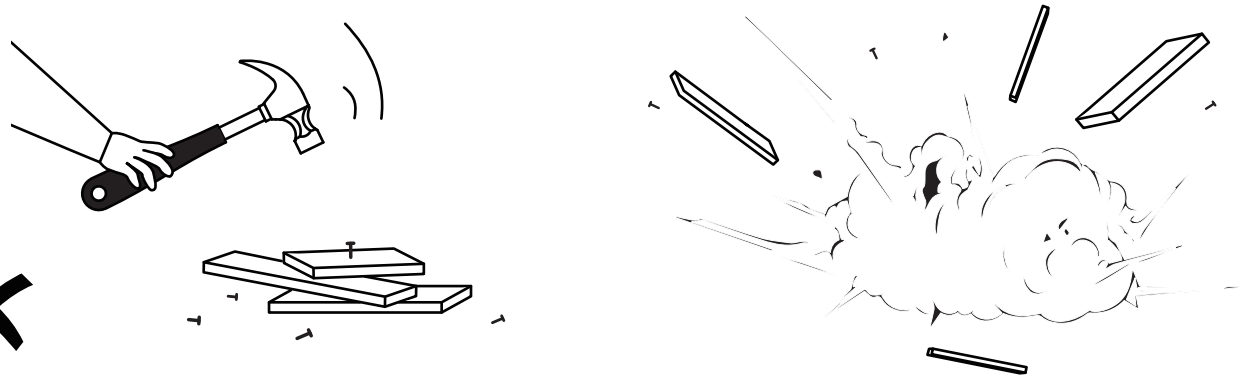

❻

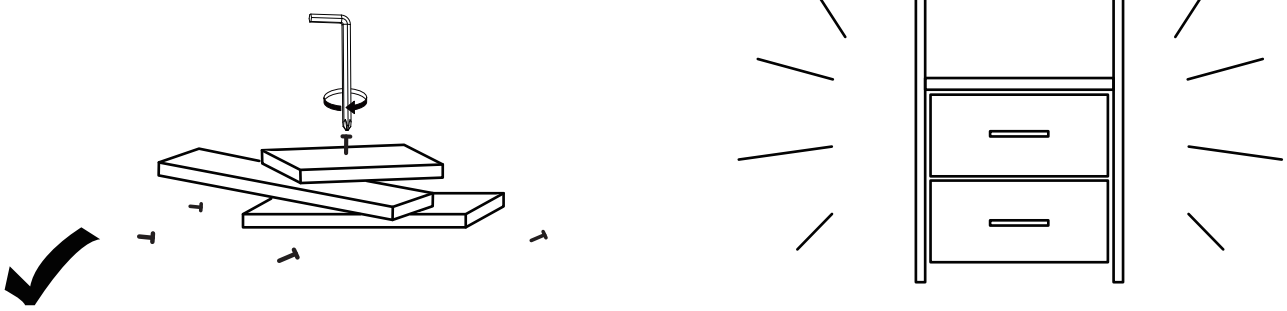

EXPLODED DRAWING

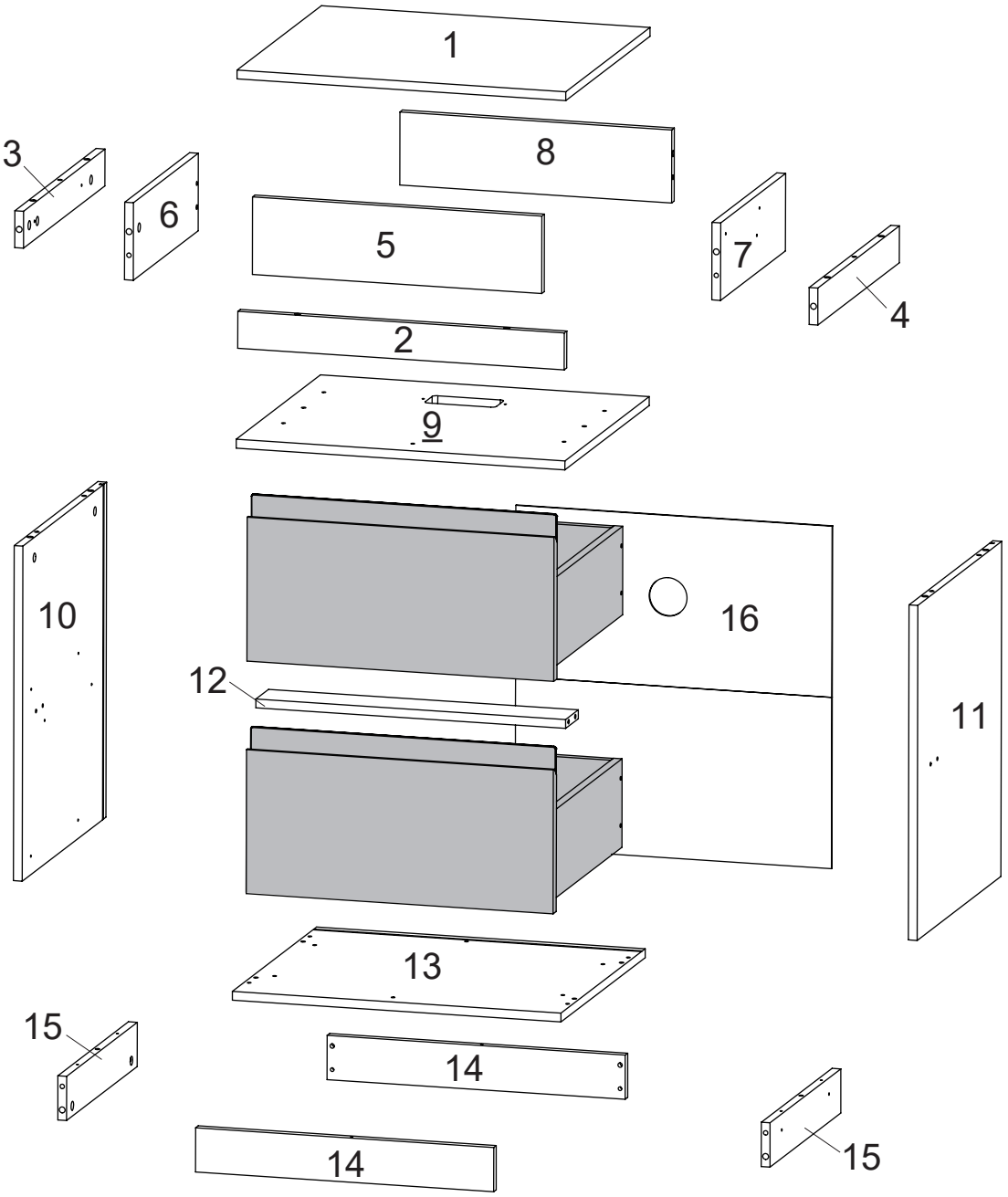

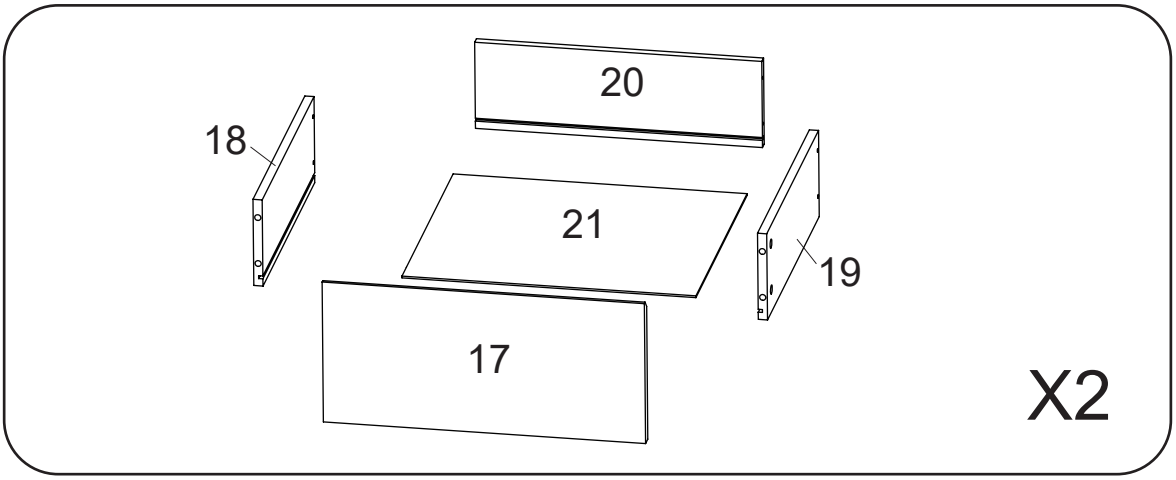

PARTS

A X28

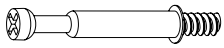

B X22



C X28



D X2

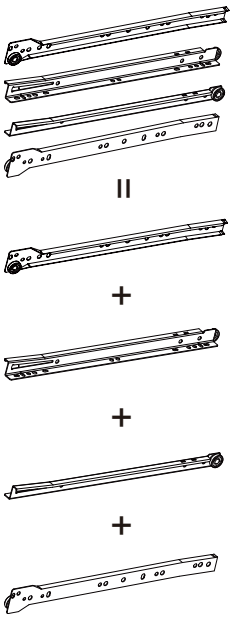

E X1

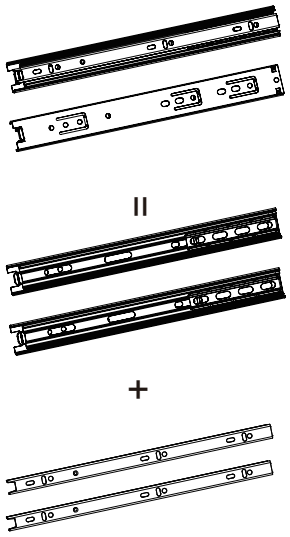

F X10
M4x14

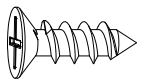

G X27
M4x35



H X2

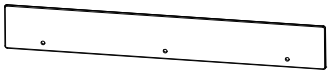

I X1



J X26
M3x12

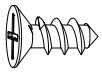

K X4

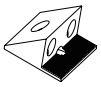

M X1

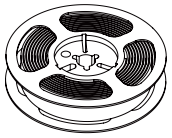

M1



M2

N X14

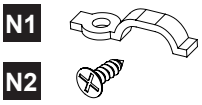

O X2

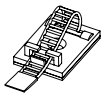

P X1

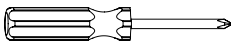

R X32

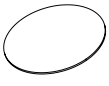

REMARK

MINIFIX POSITION

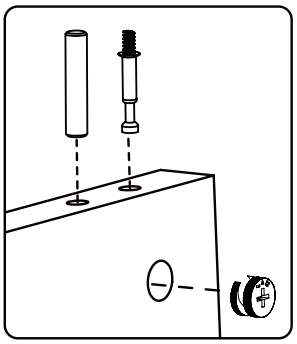

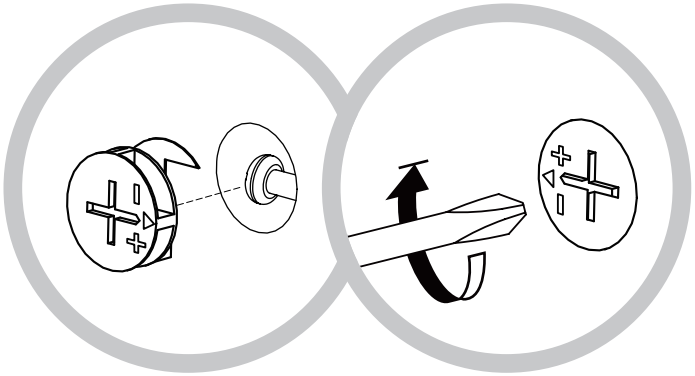

Step 1

Put a blanket under the product to avoid scratch or damage.

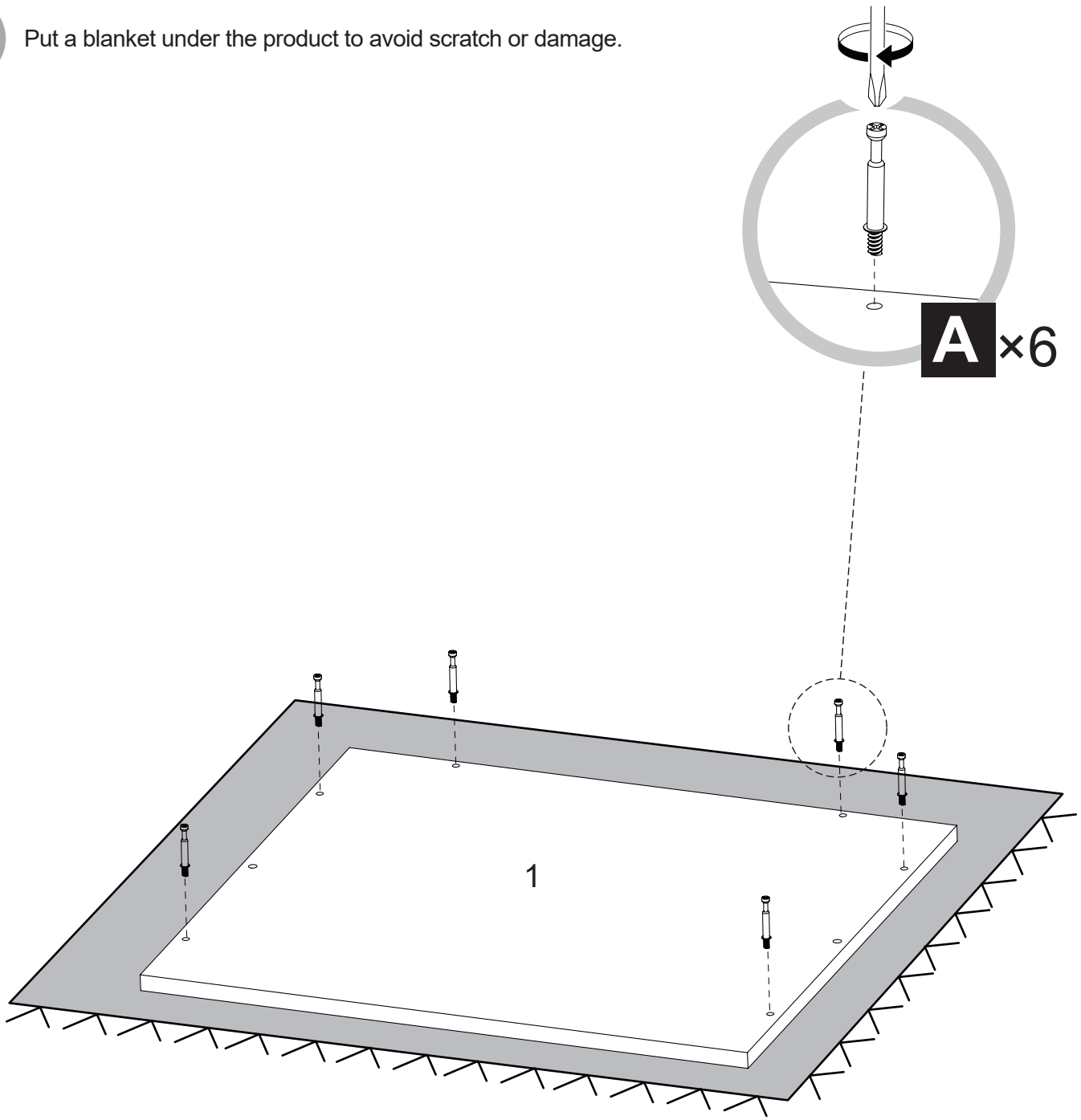

Step 2

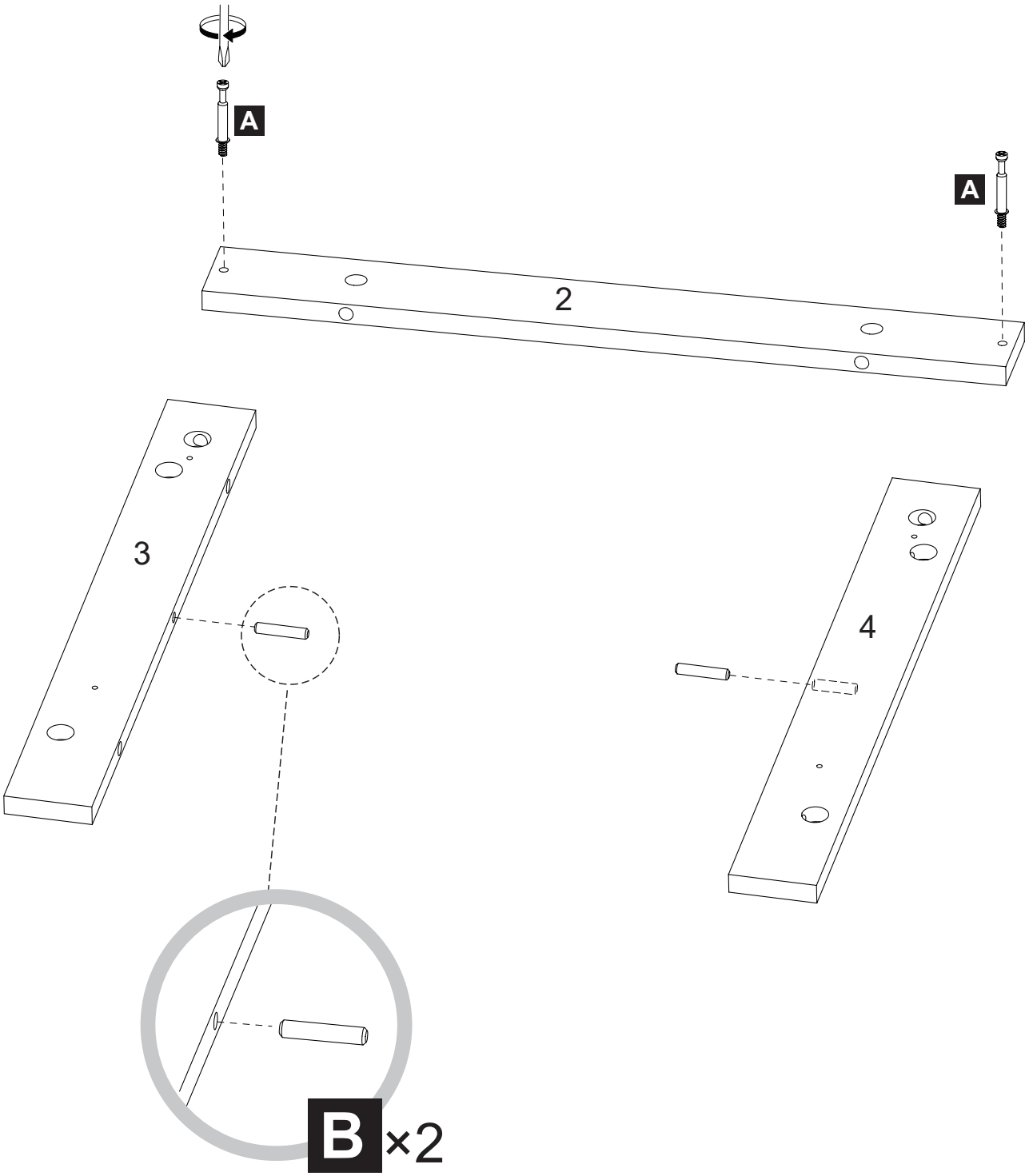

Step 3

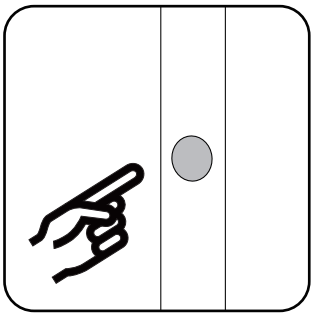

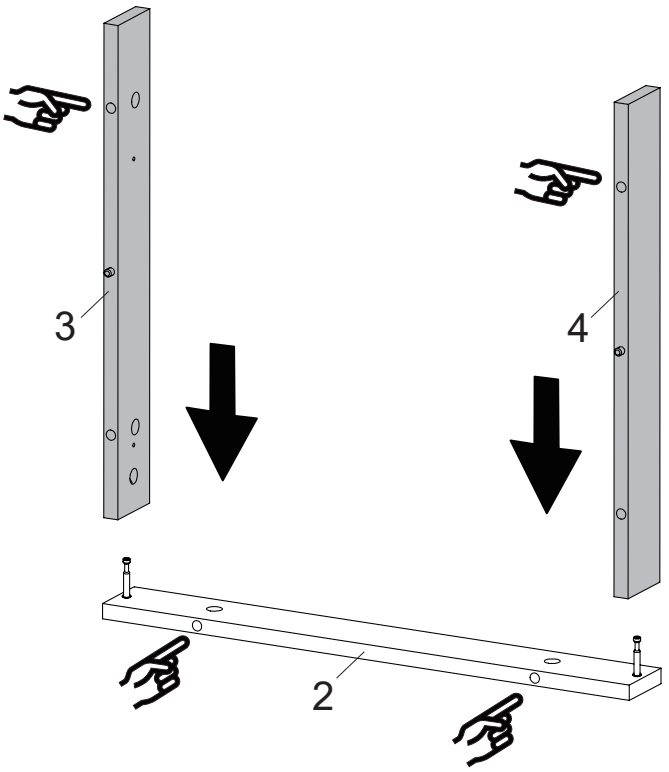

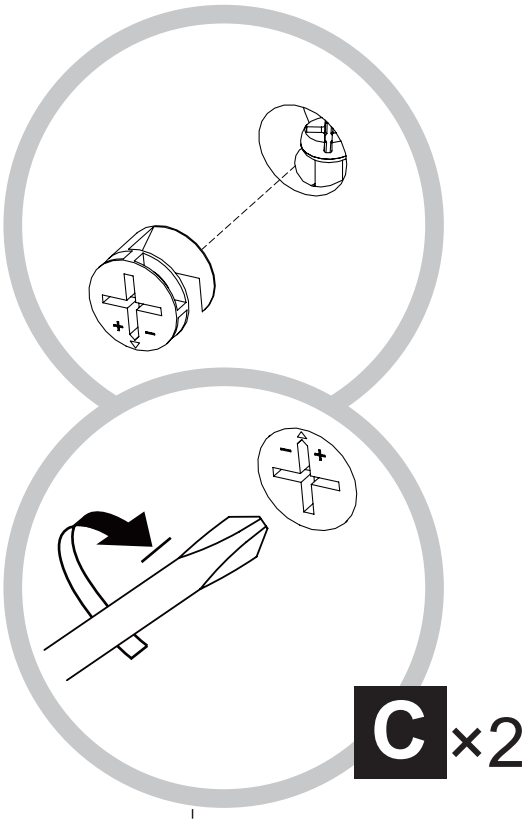

C ×2

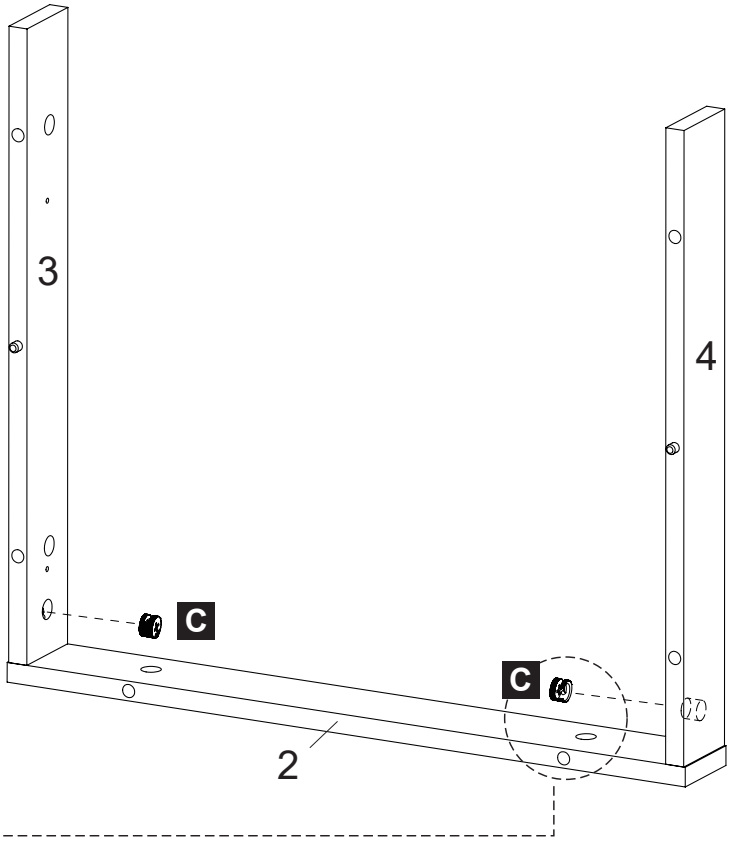

Step 4

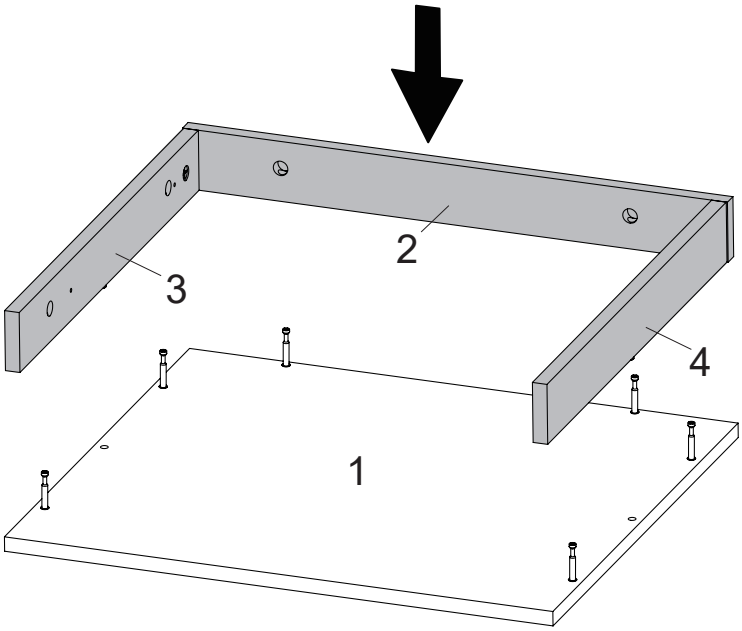

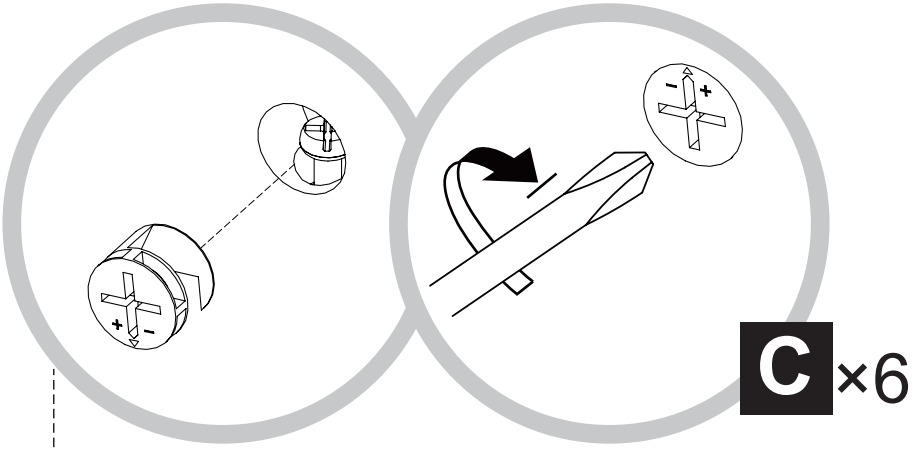

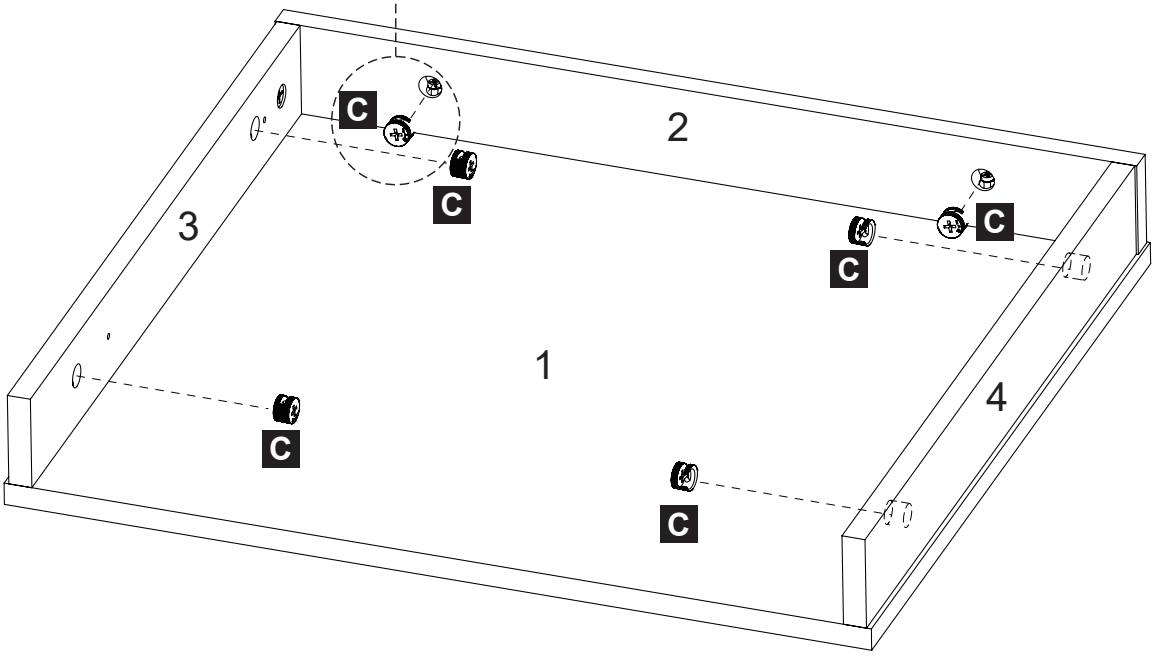

Step 5

1. Press the plastic part in the indicated direction to separate drawer runner **E1** and **E2** before assembling.

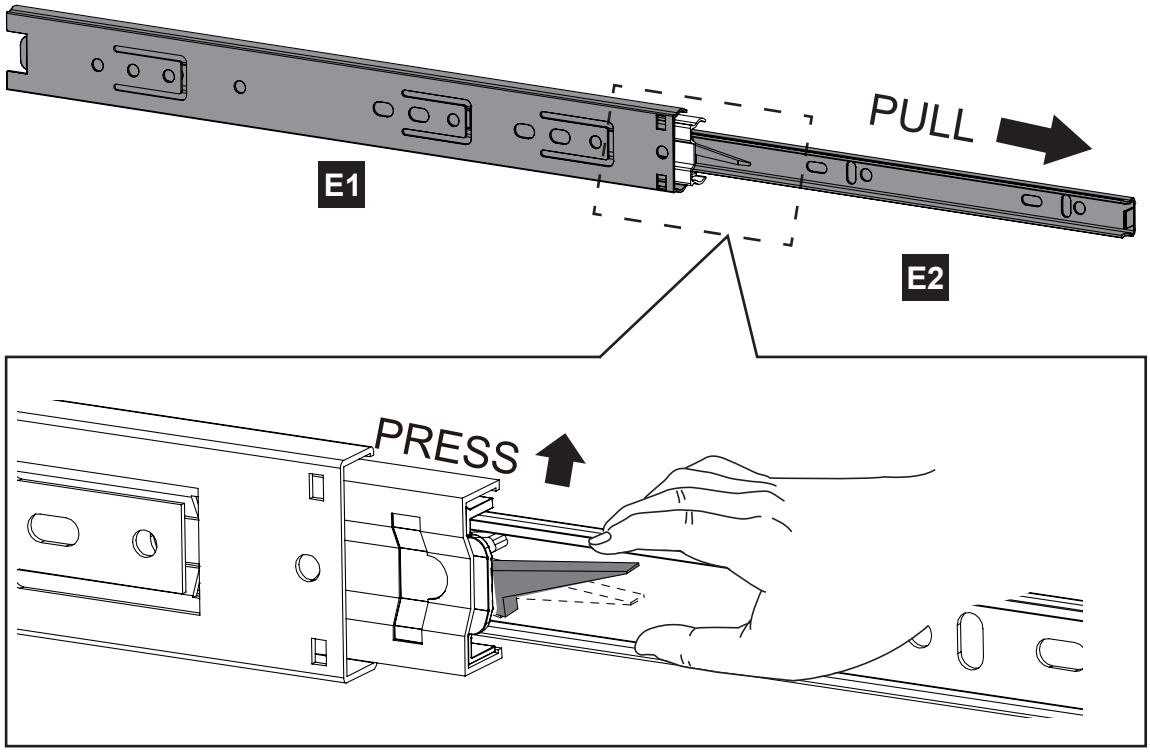

2. Please grip the **E1** part while sliding the **E2** part.

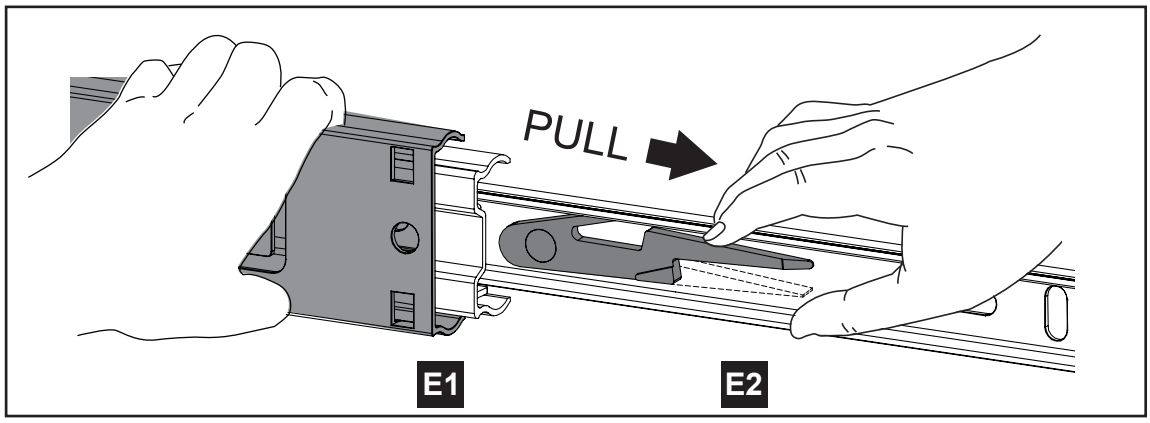

3. Accomplish.

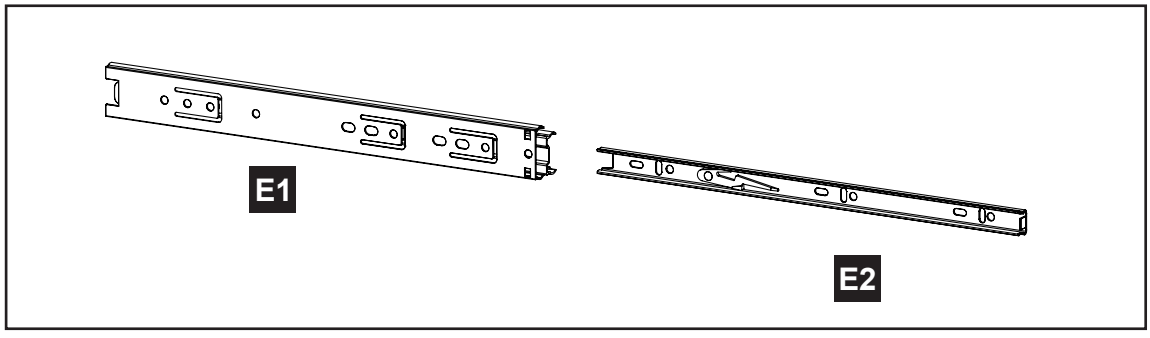

Step 6

When installing, please make sure the screws are flattened, not crooked; Otherwise the drawers will not be installed perfectly.

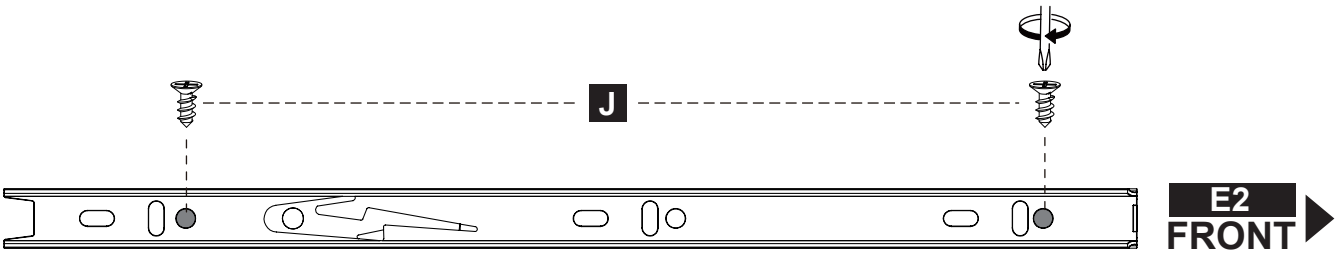





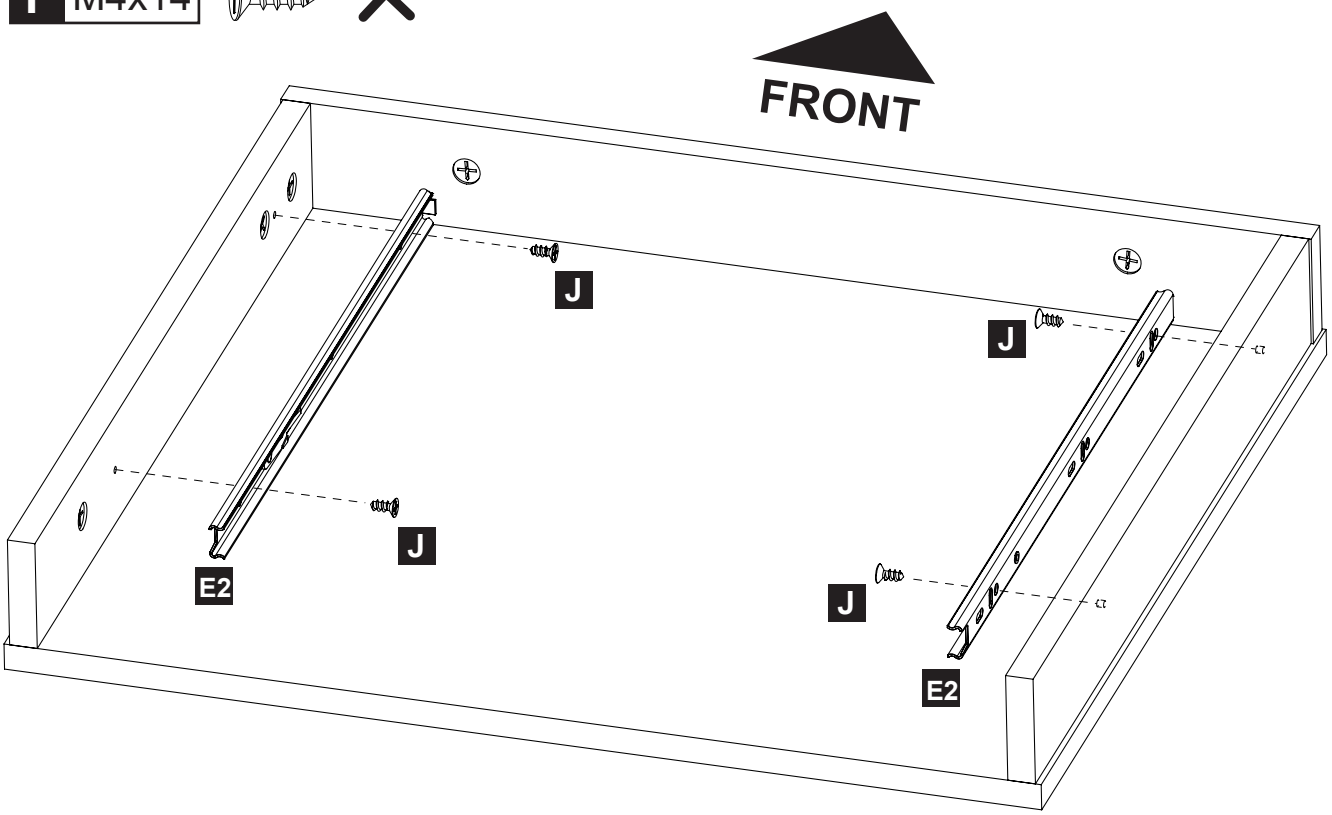

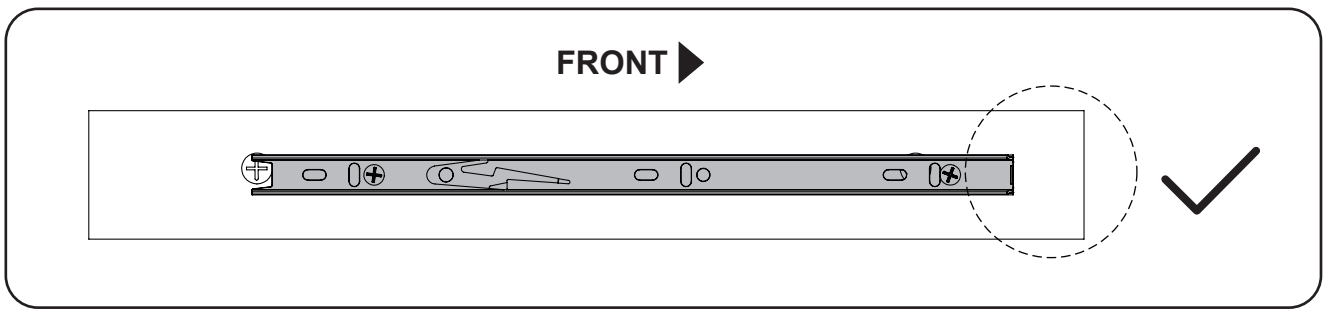

Step 7

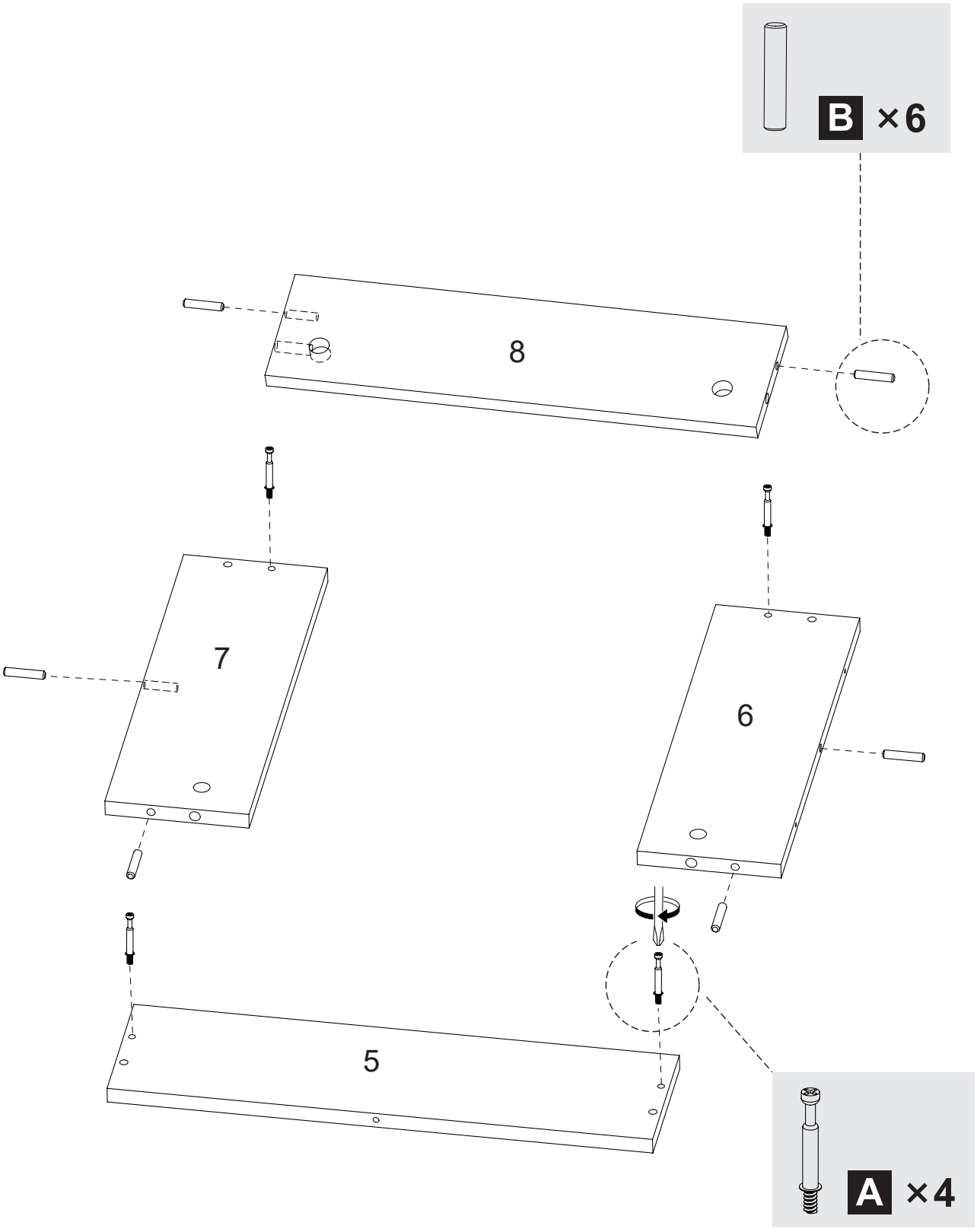

Step 8

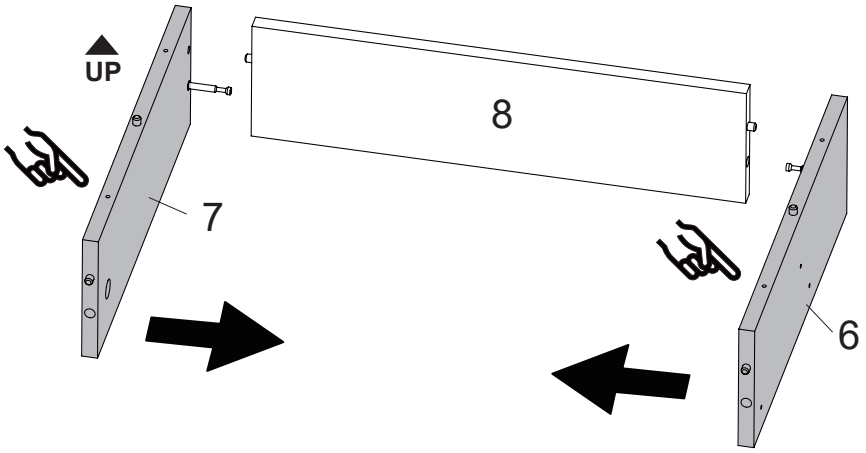

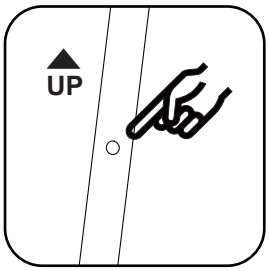

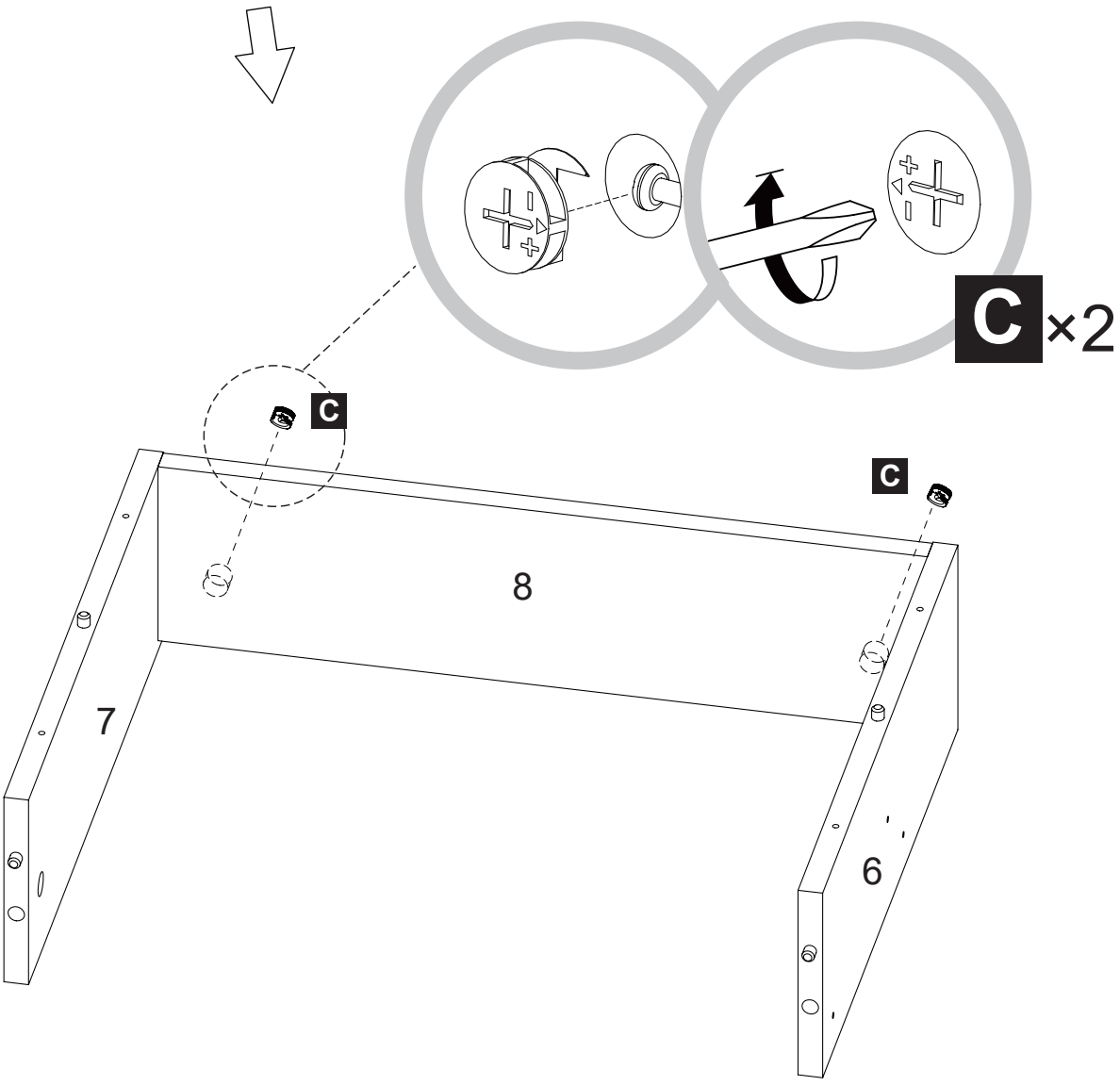

Step 9

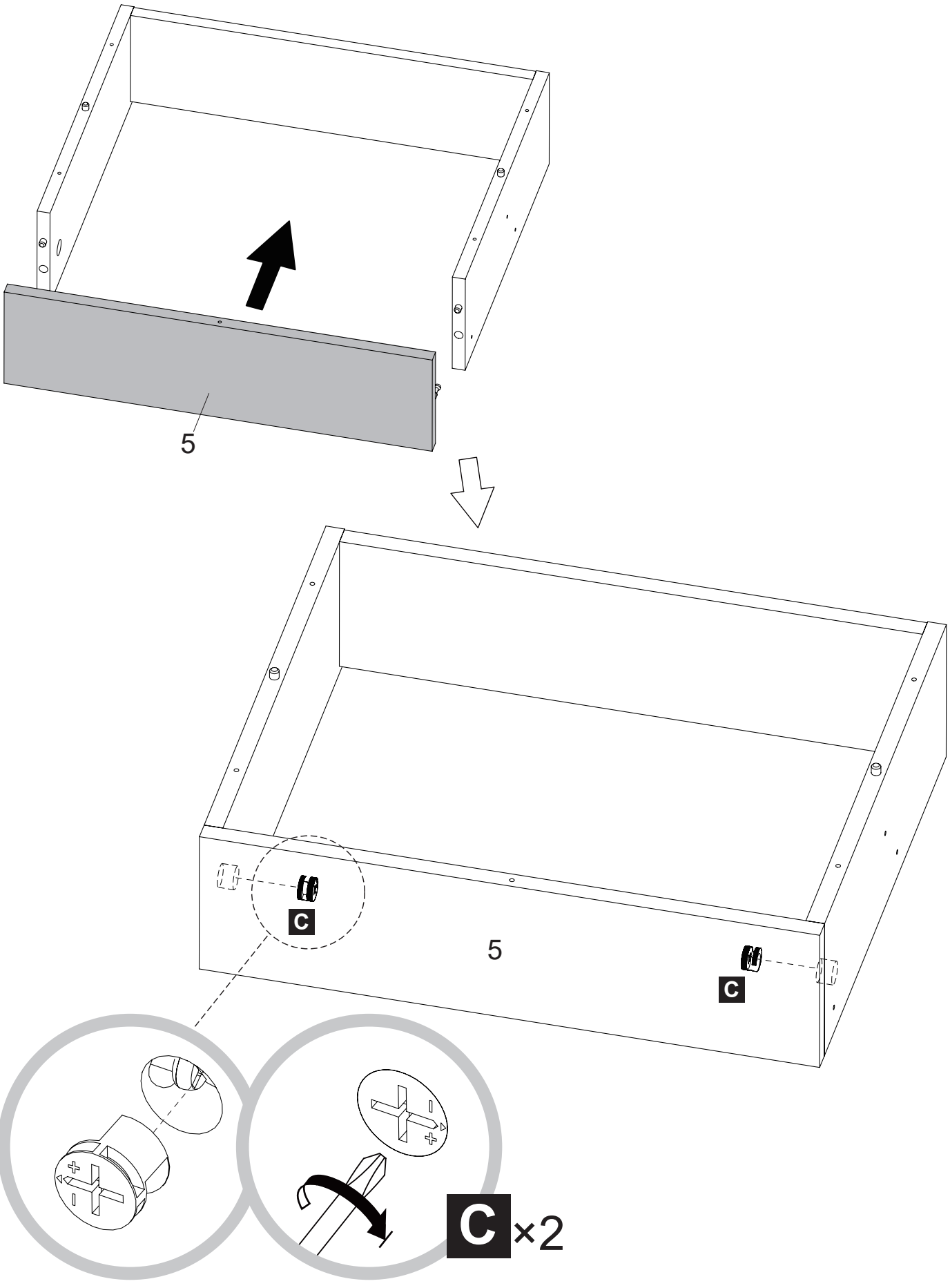

Step 10

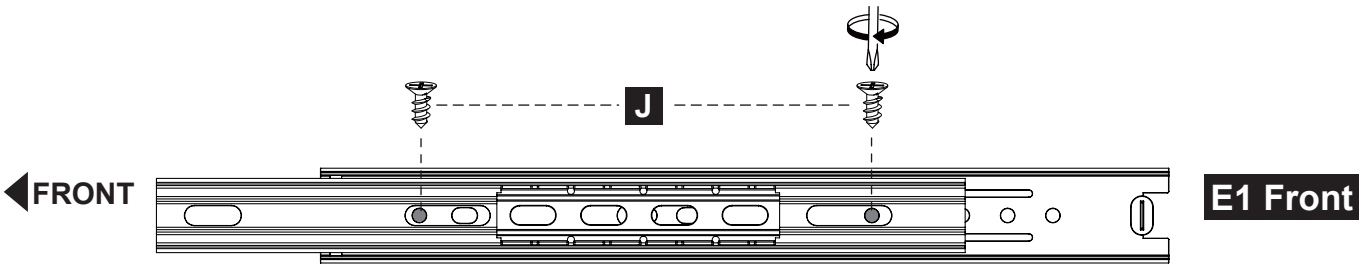

J M3x12

F M4x14

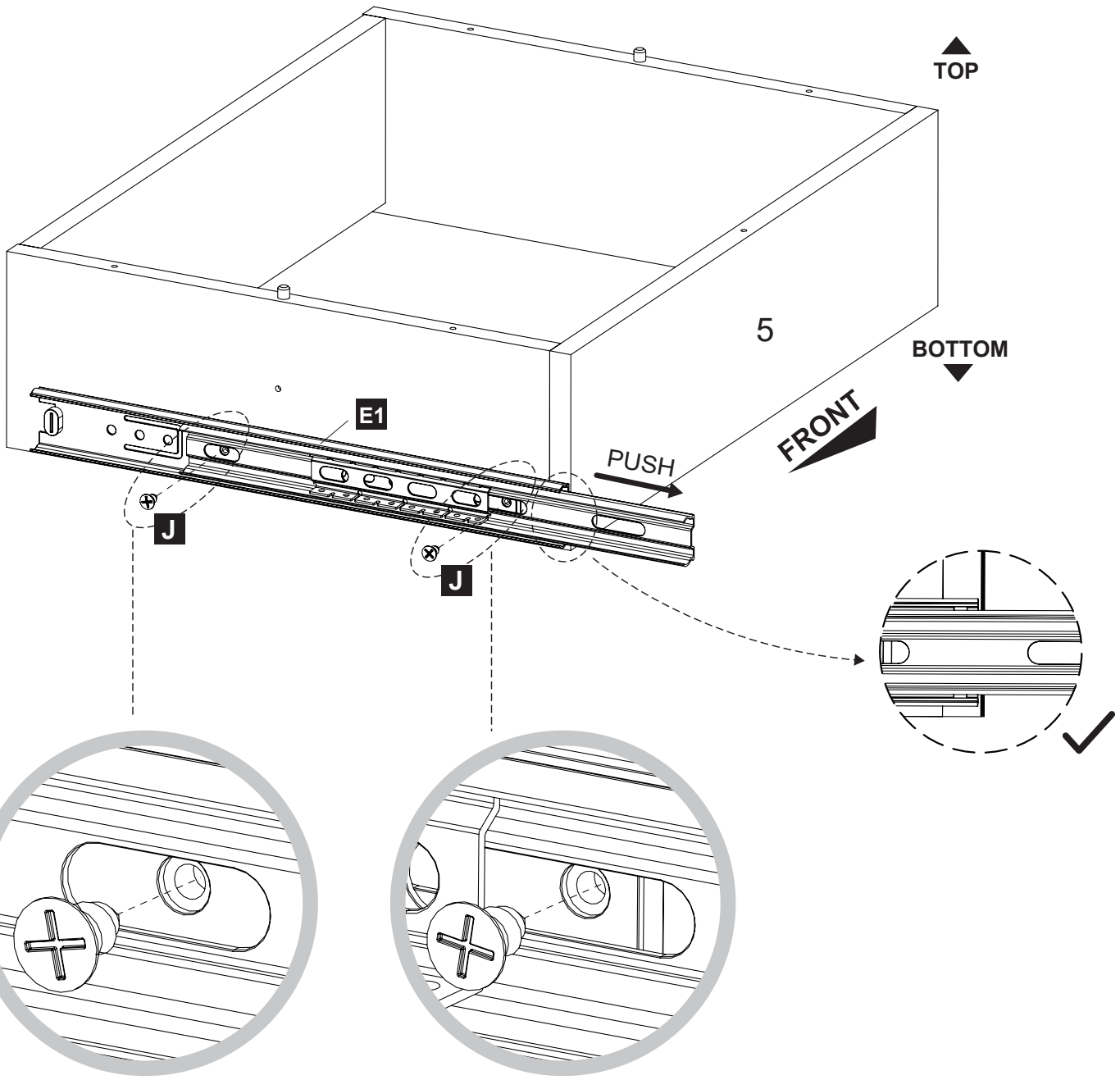

1. When installing, please make sure the screws are flattened, not crooked; Otherwise the drawers will not be installed perfectly.
2. Then please install part **J** from the front of part **E1** .

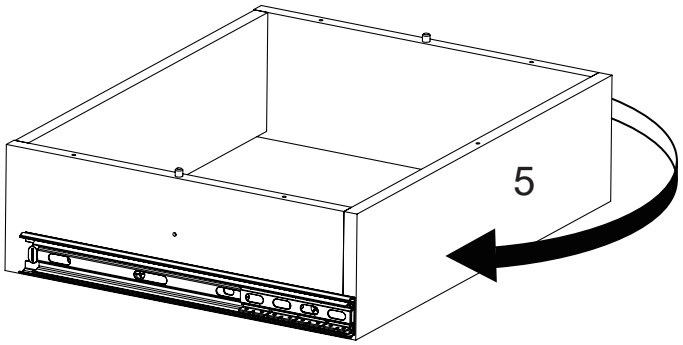

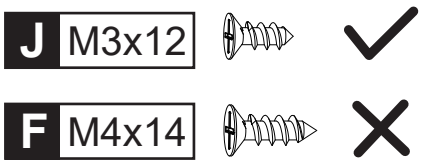

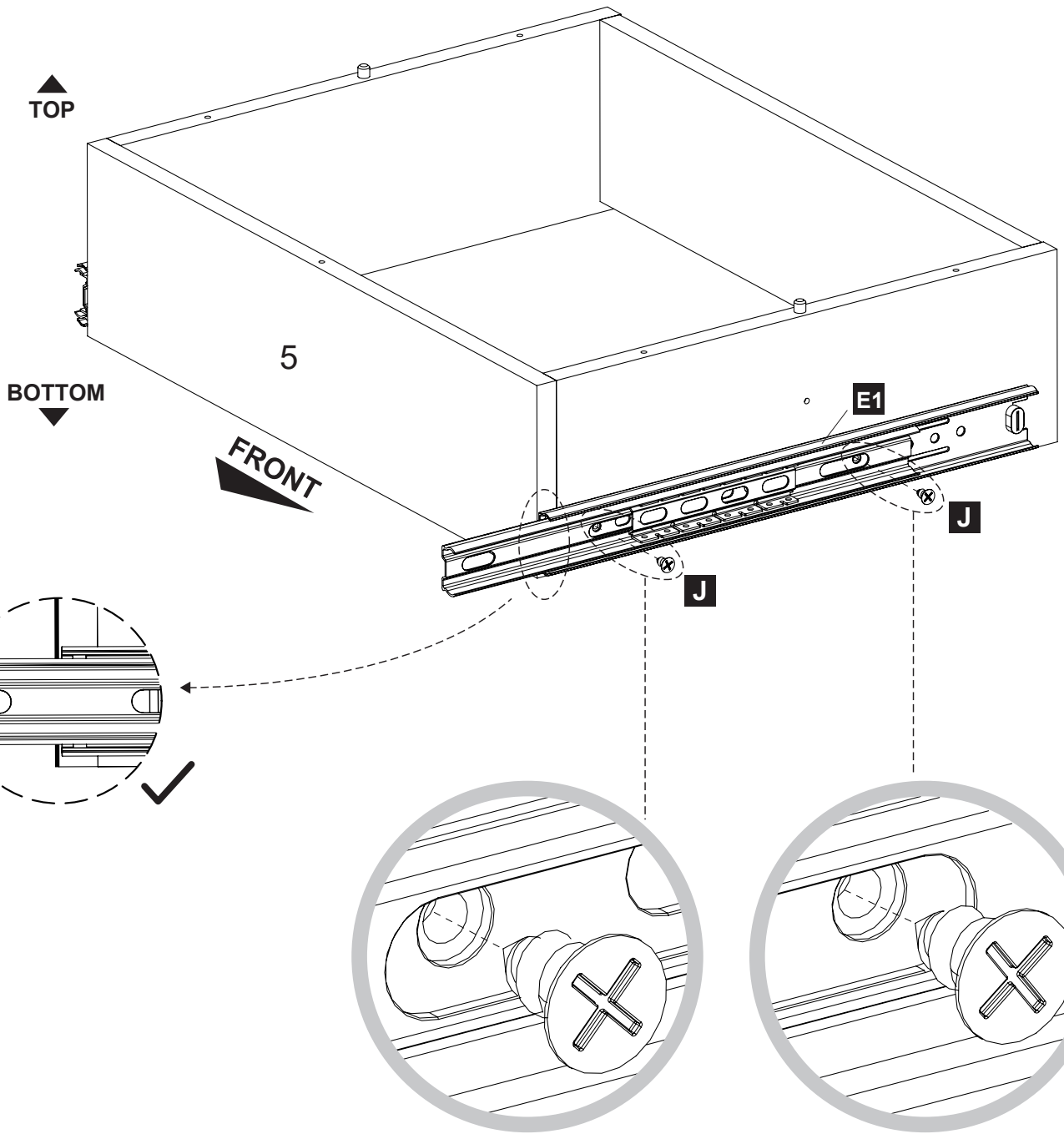

Step 11

1. When installing the LED strip, do not cover the upper holes. Keep it about 5 mm away from the hole edges.
2. Please pay attention to the position of the type of plugs during installation.

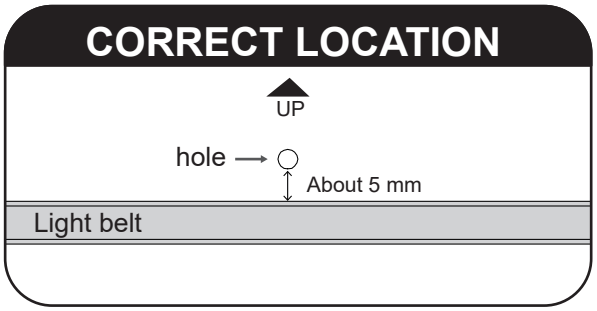

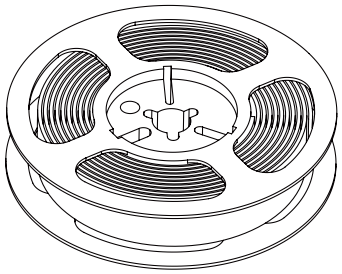

M1



M1

Long

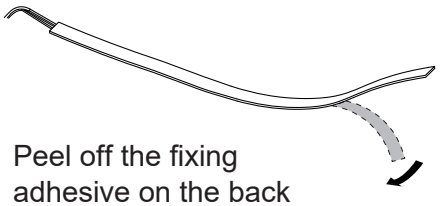

Peel off the fixing adhesive on the back of the part M1.

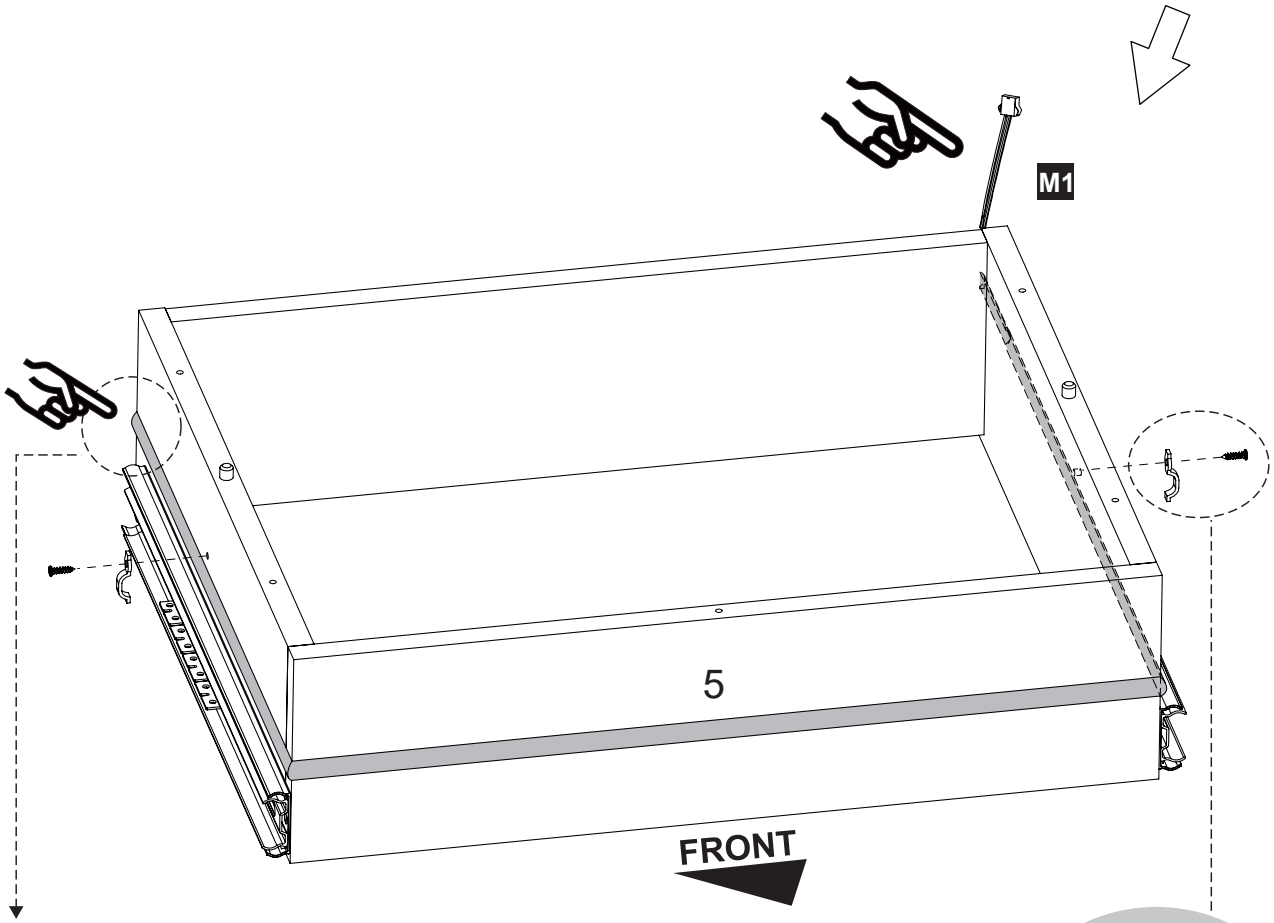

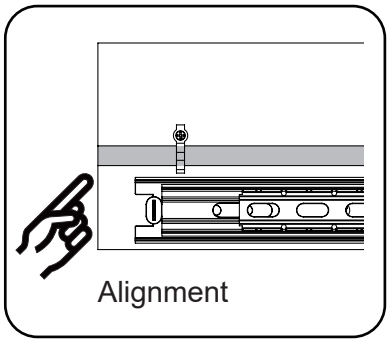

Install the fastener to prevent the light strip from falling off.

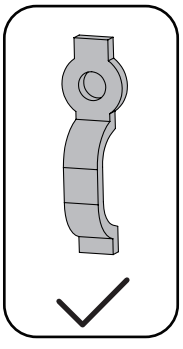

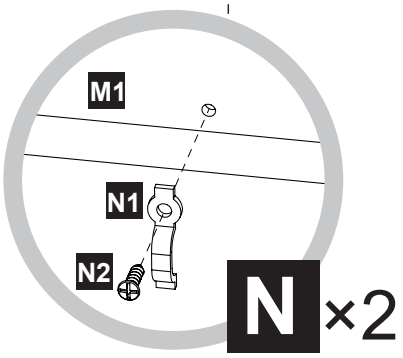

Step 12

1. Please full extend the slide runners.
2. Simply push the ball bearing cart all the way to the end of the slide(in both sides).

❶

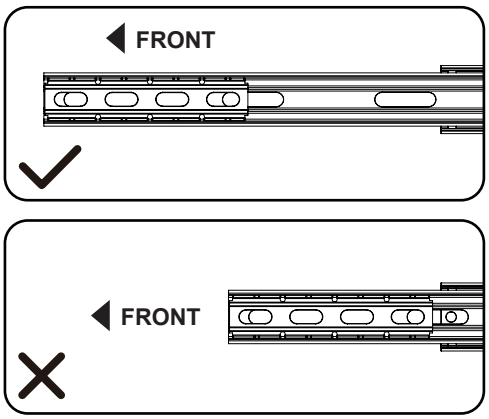

❷

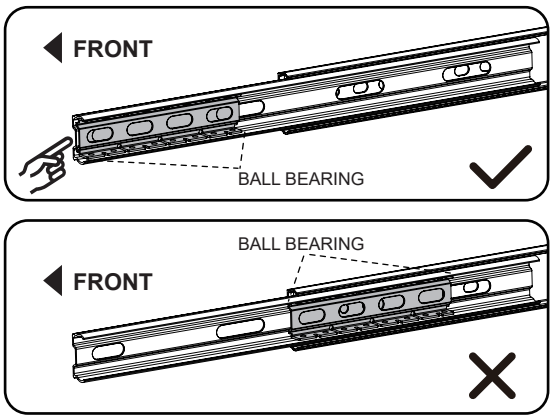

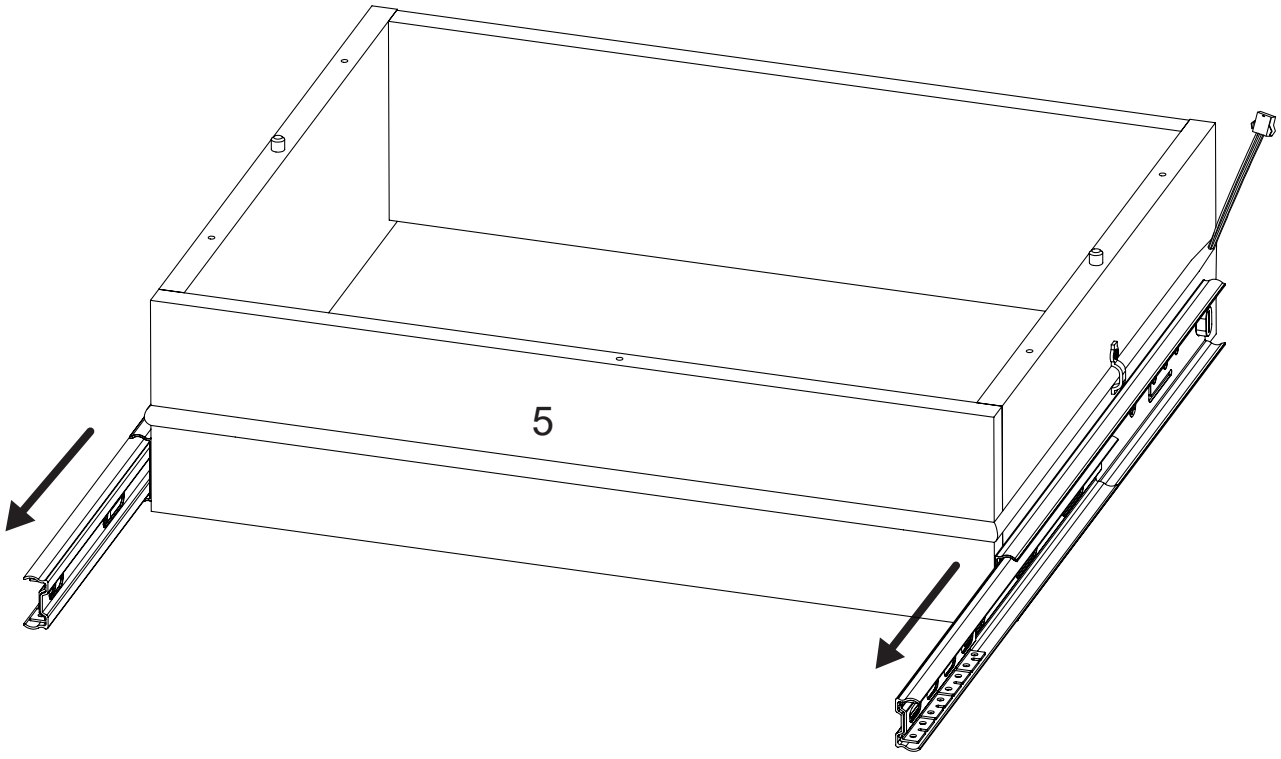

Step 13

1. Align the slide runners on the drawer with the unit and push it carefully inside until it stops.
2. If the drawer does not go in smoothly please take it out and repeat the step.

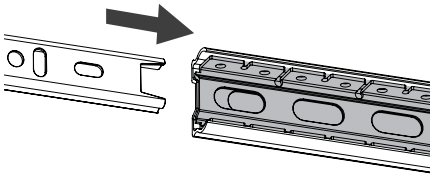

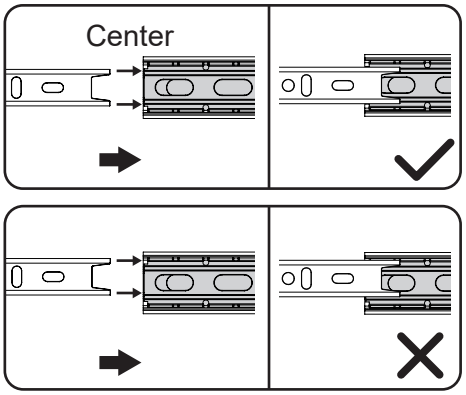

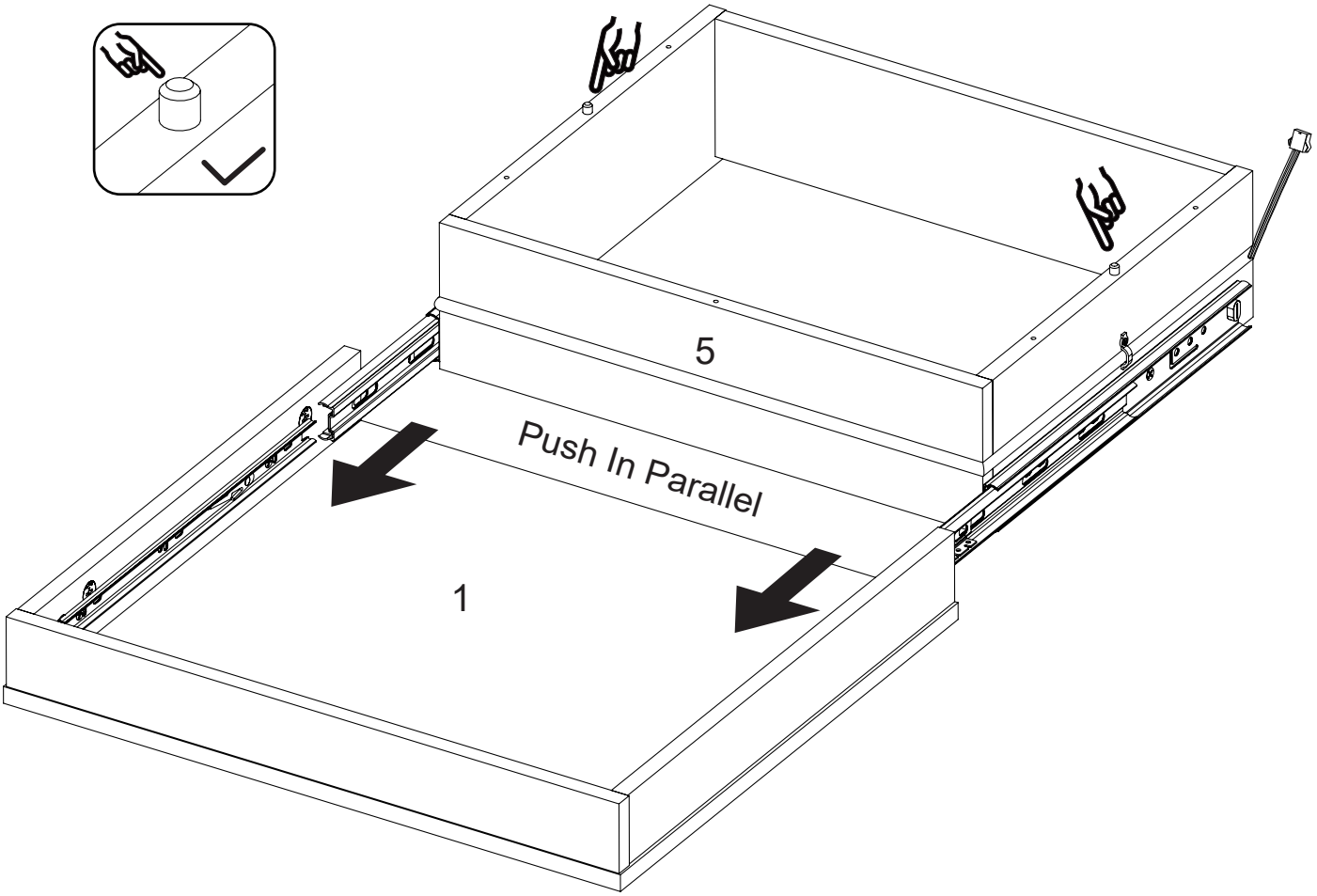

Step 14

Please fully tighten all the screws after they are in right place.

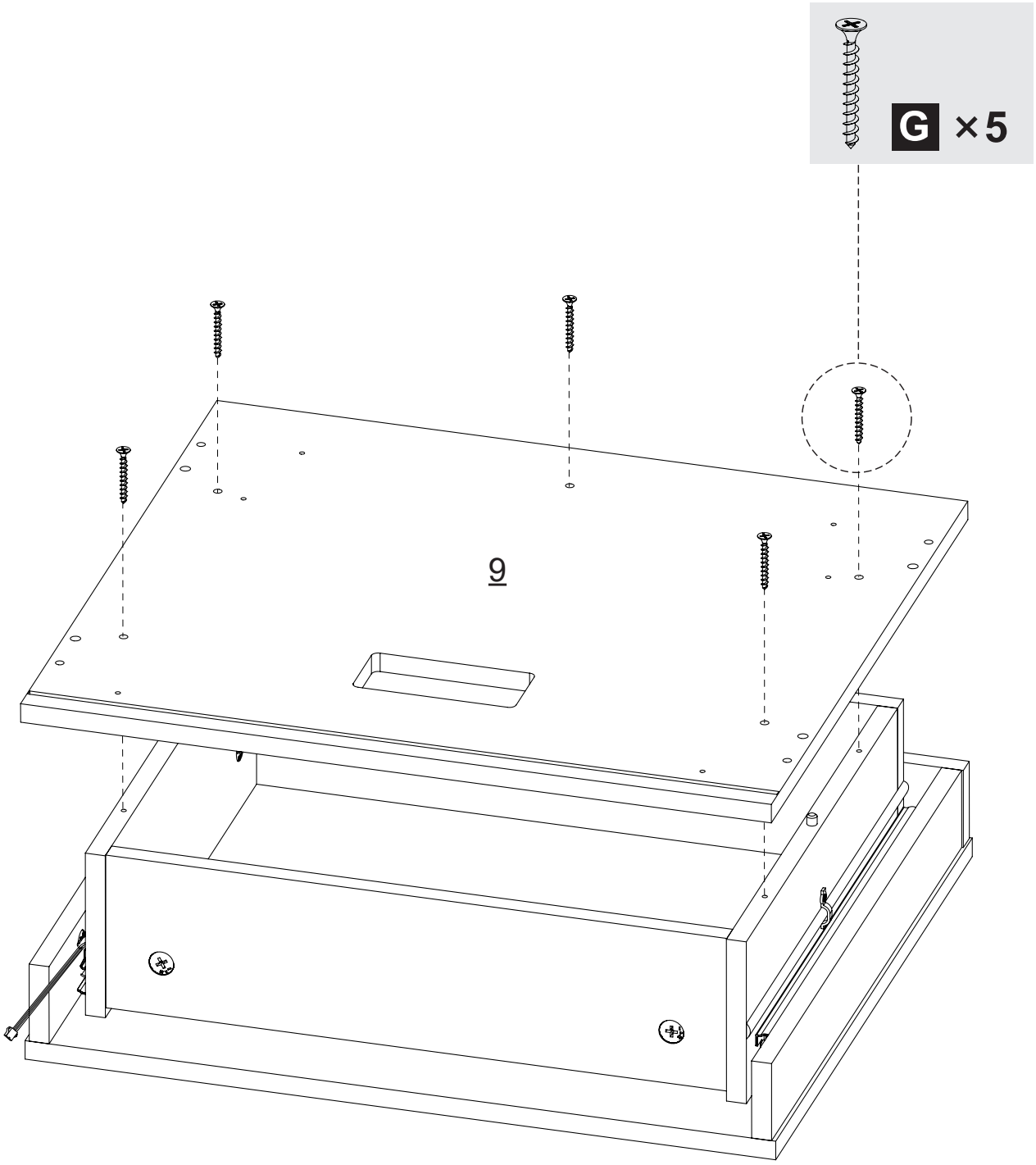

Step 15

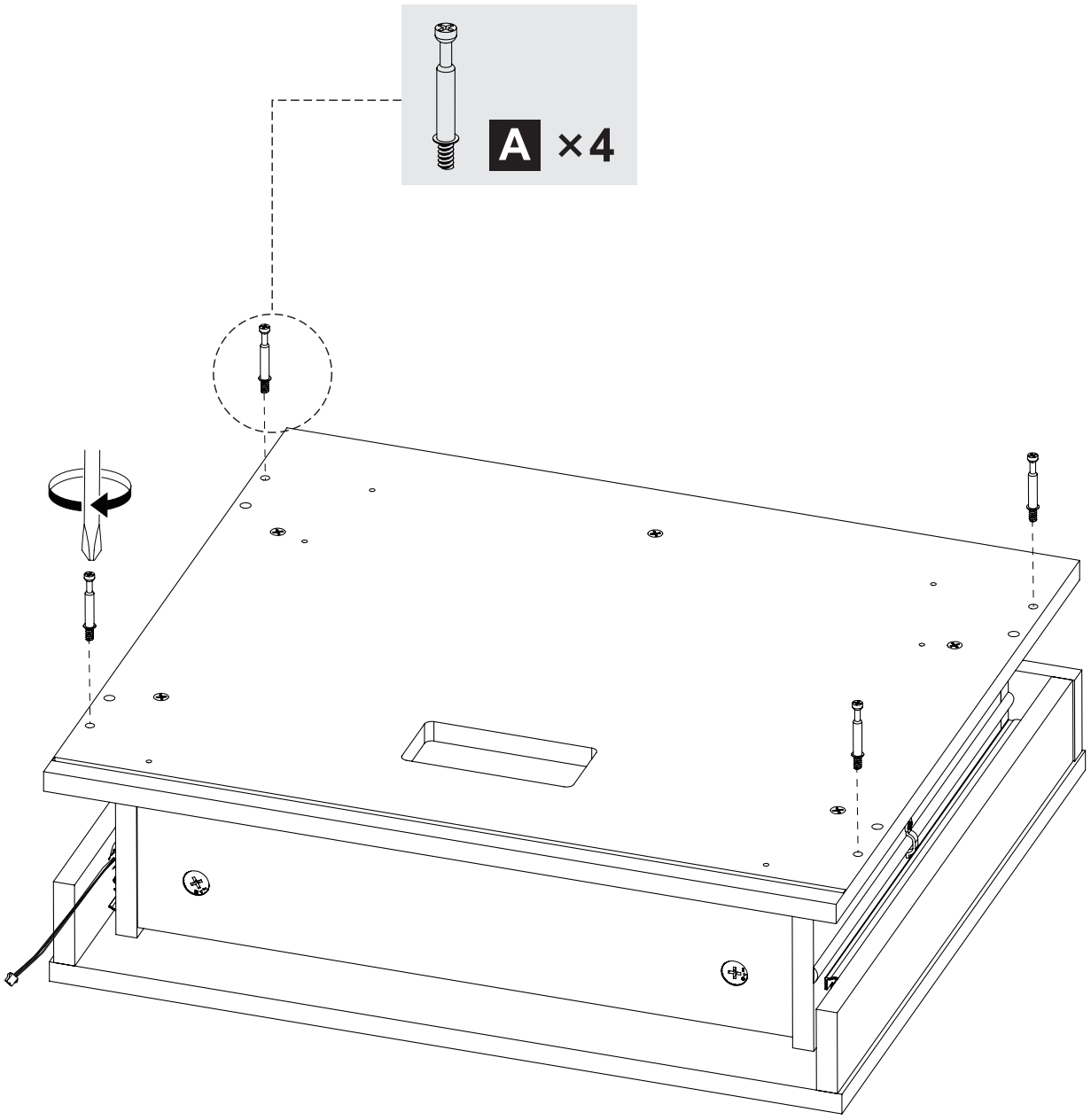

Step 16

1. When installing the LED strip, do not cover the upper holes. Keep it about 5 mm away from the hole edges.
2. Please pay attention to the position of the plug during installation.

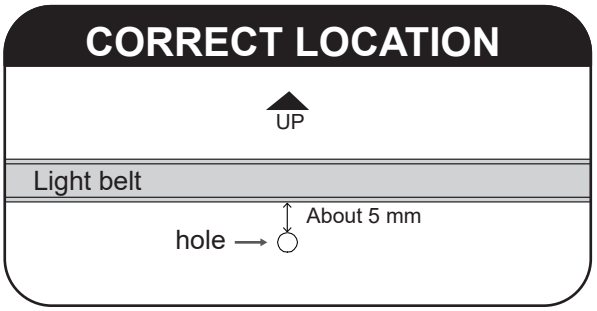

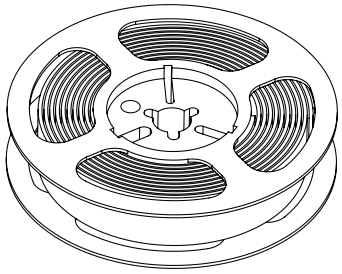

M1

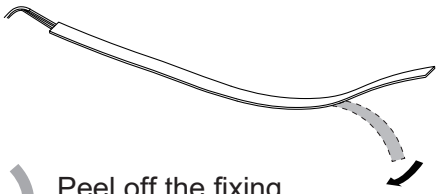

M1
Short

Peel off the fixing adhesive on the back of the part M1.

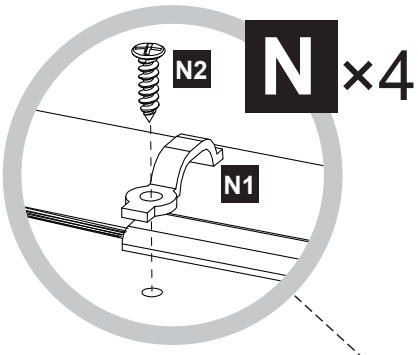

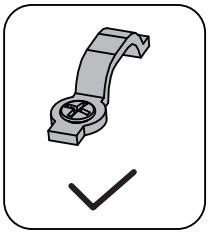

Install the fastener to prevent the light strip from falling off.

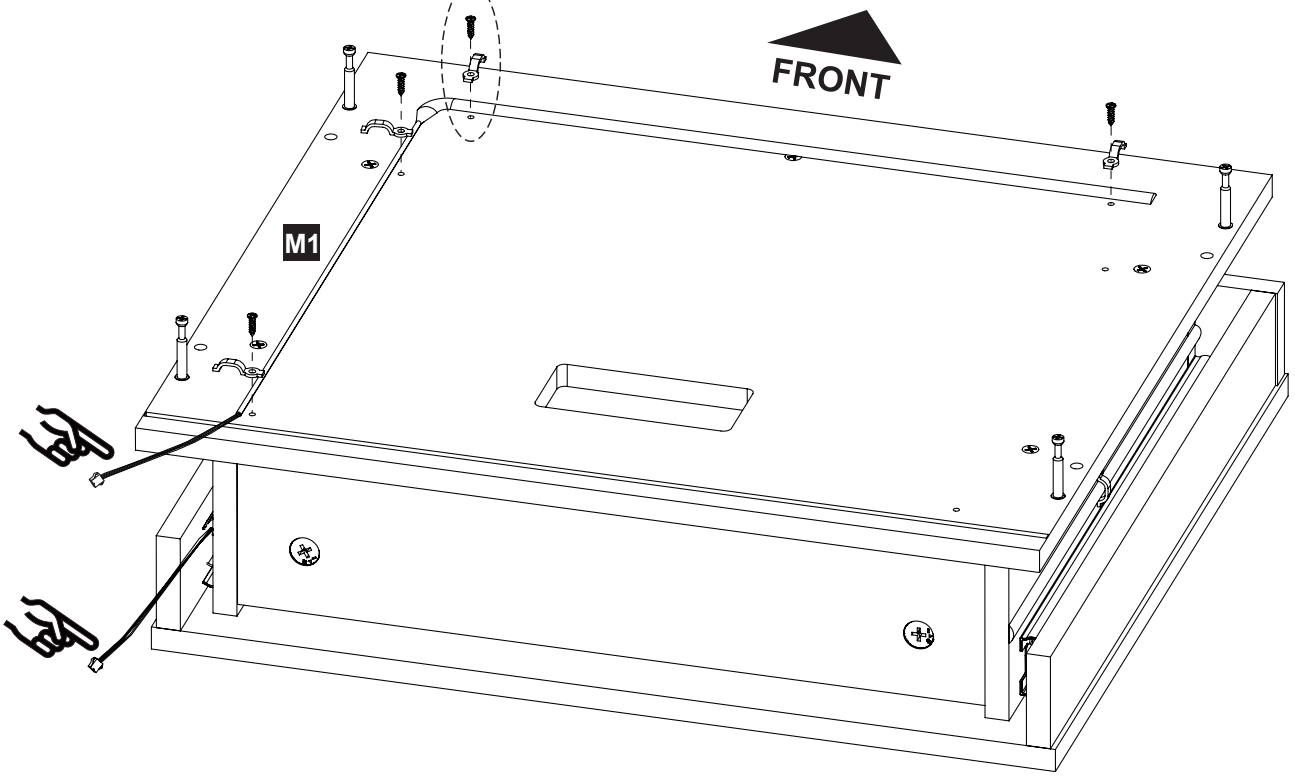

Step 17

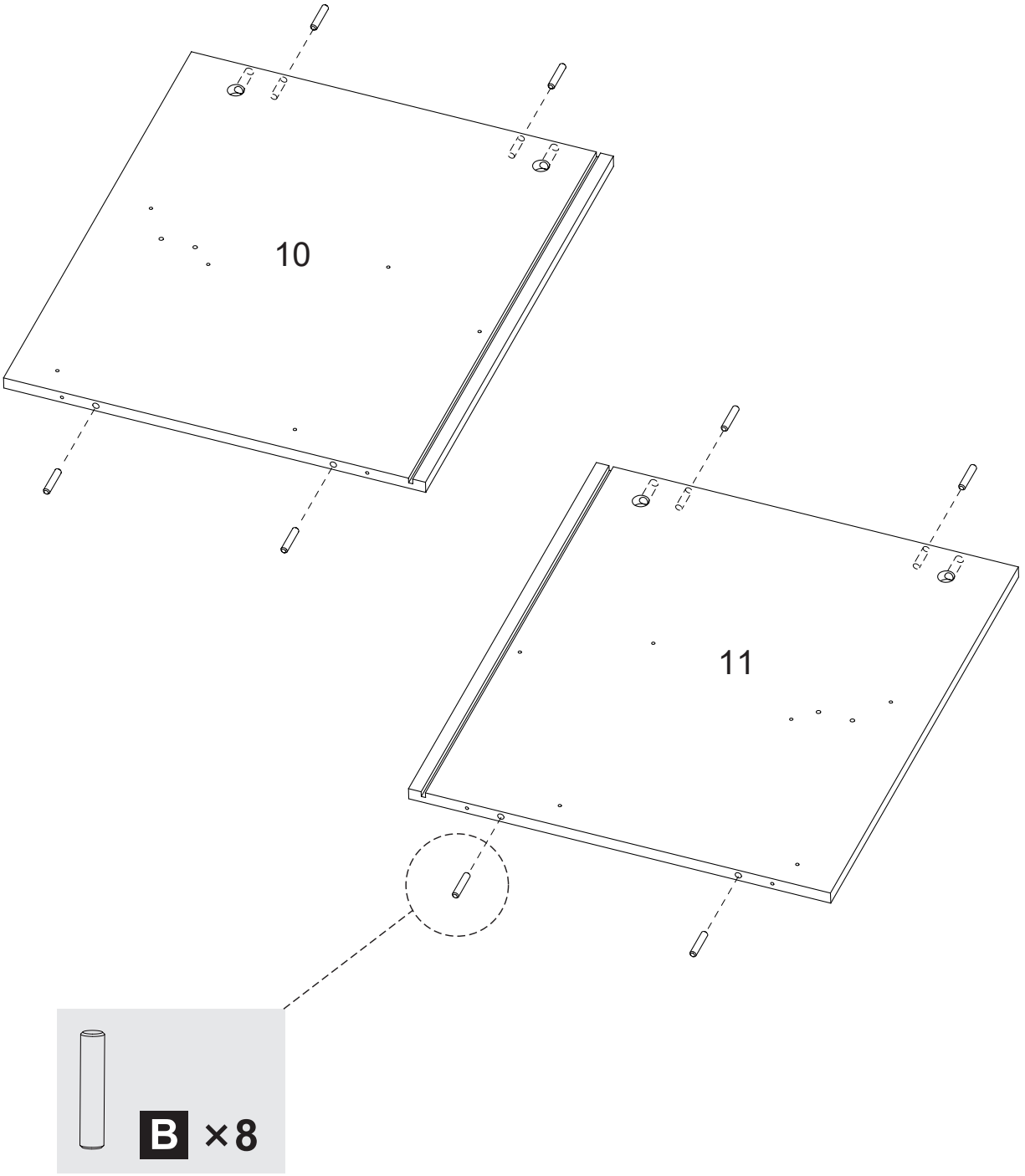

B ×8

Step 18

When installing, please make sure the screws are flattened, not crooked; Otherwise the drawers will not be installed perfectly.

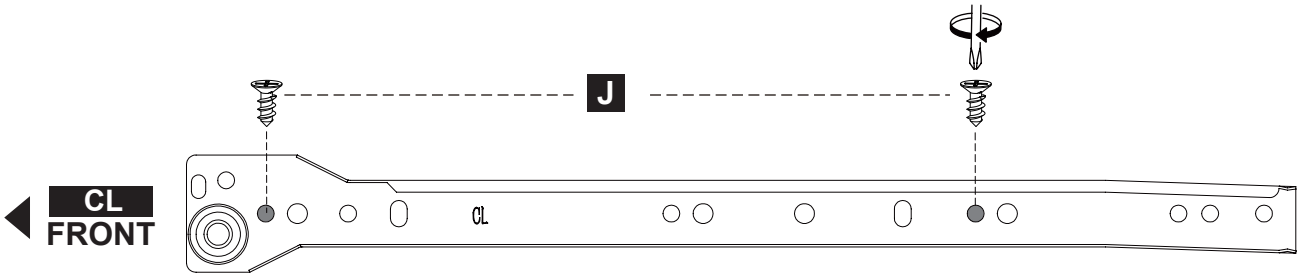

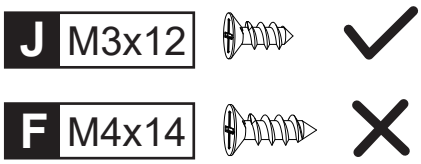

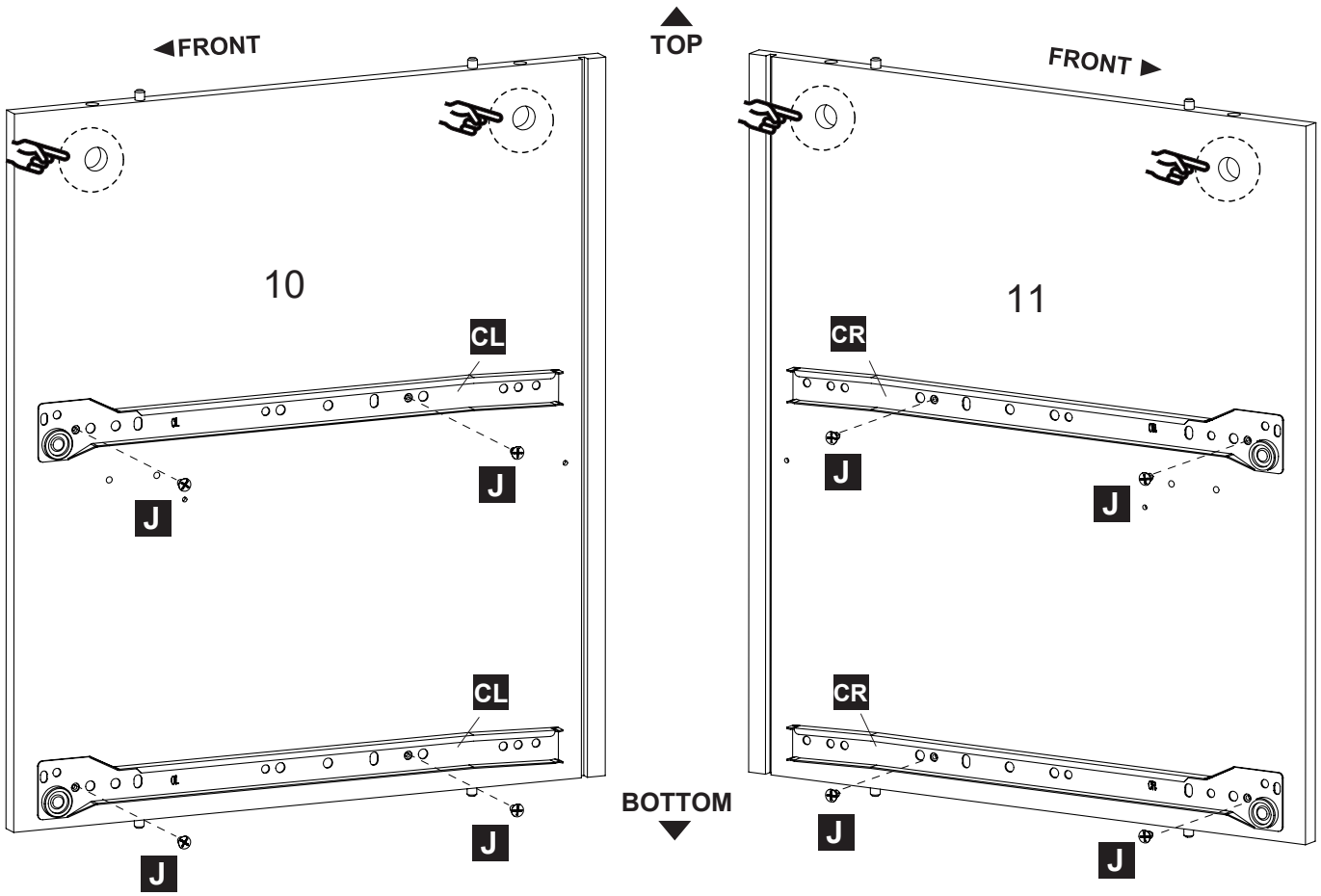

Step 19

1. When installing the LED strip, do not cover the upper holes. Keep it about 5 mm away from the hole edges.
2. Please pay attention to the position of the type of plugs during installation.

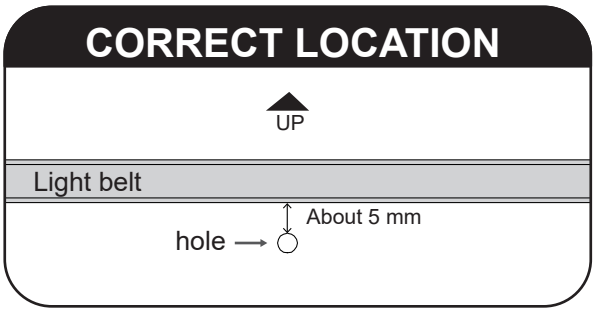

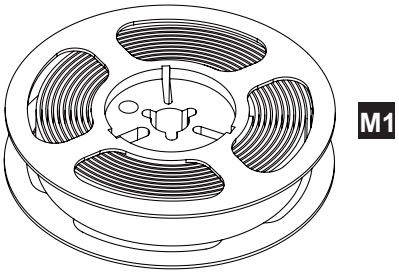

M1
Short

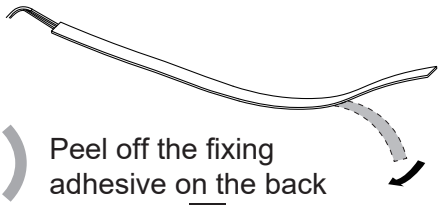

Peel off the fixing adhesive on the back of the part **M1**.

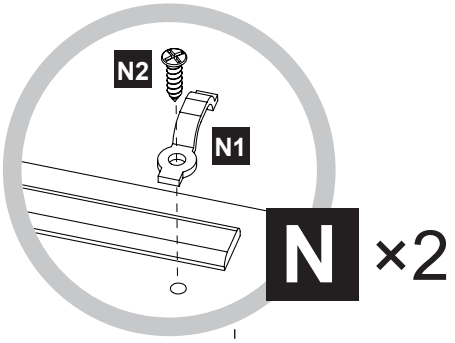

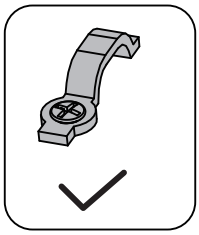

Install the fastener to prevent the light strip from falling off.

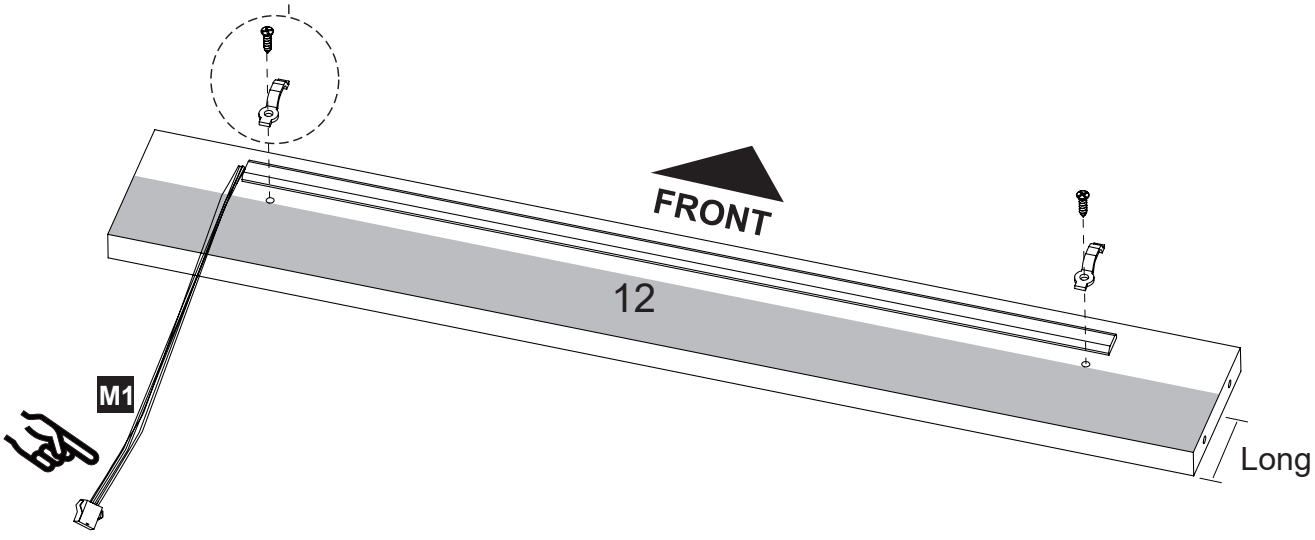

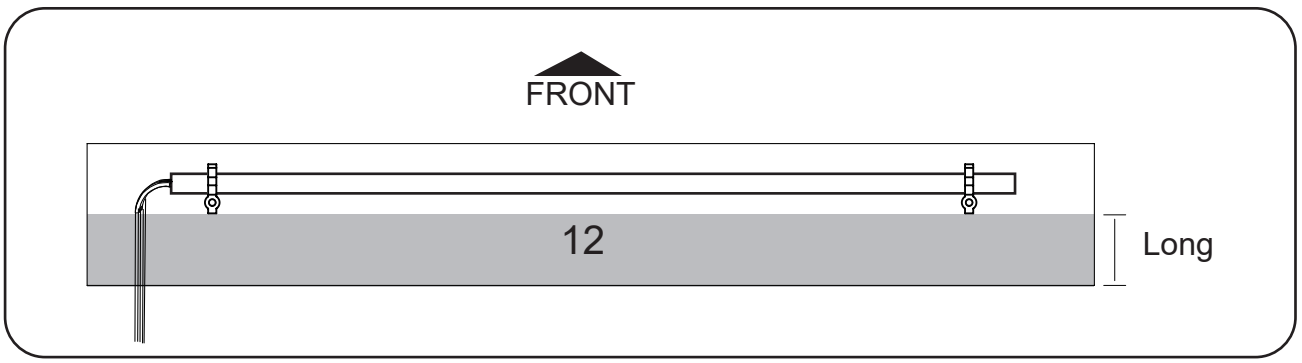

Step 20

Please pay attention to the position of the plug during installation.

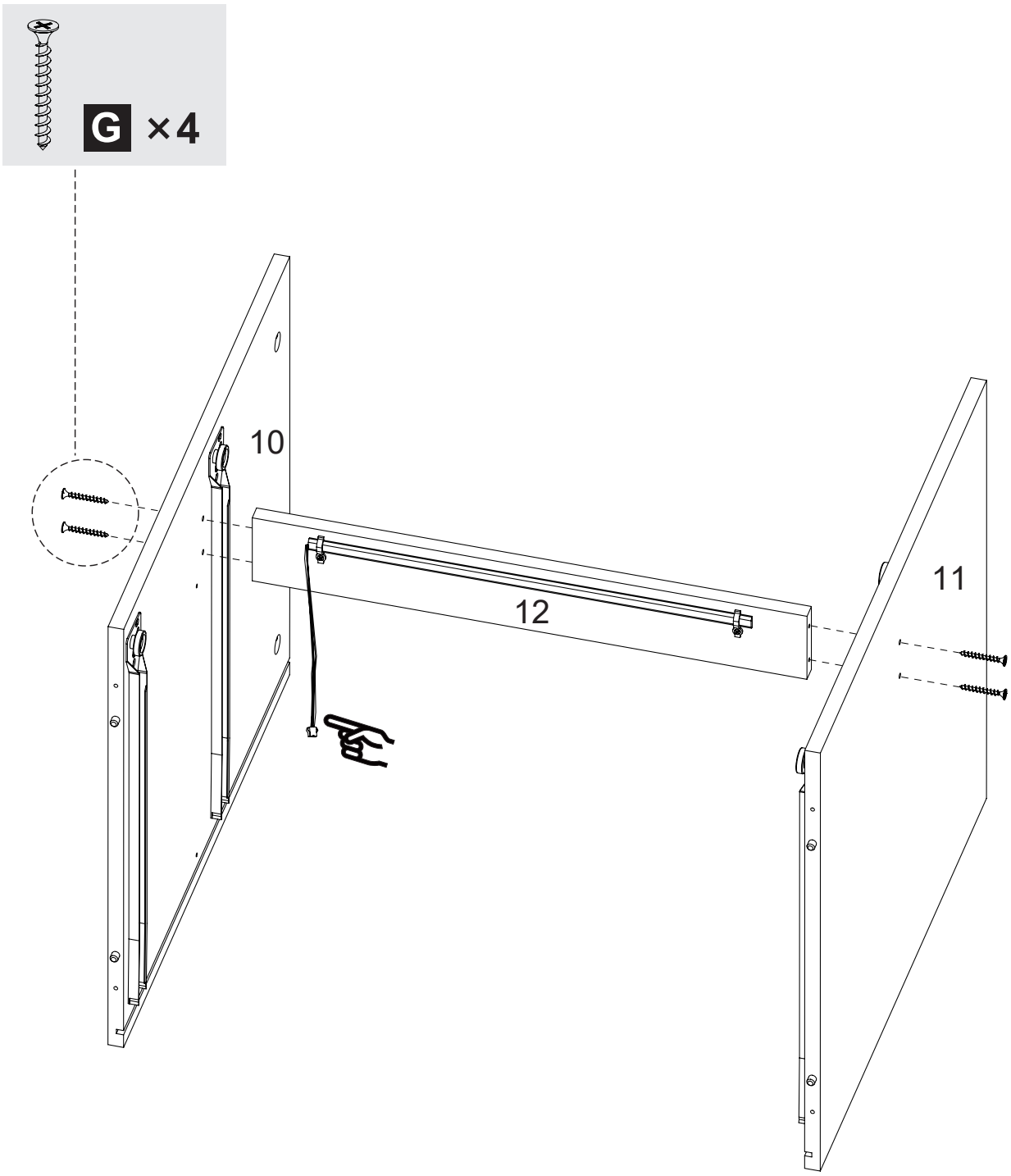

Step 21

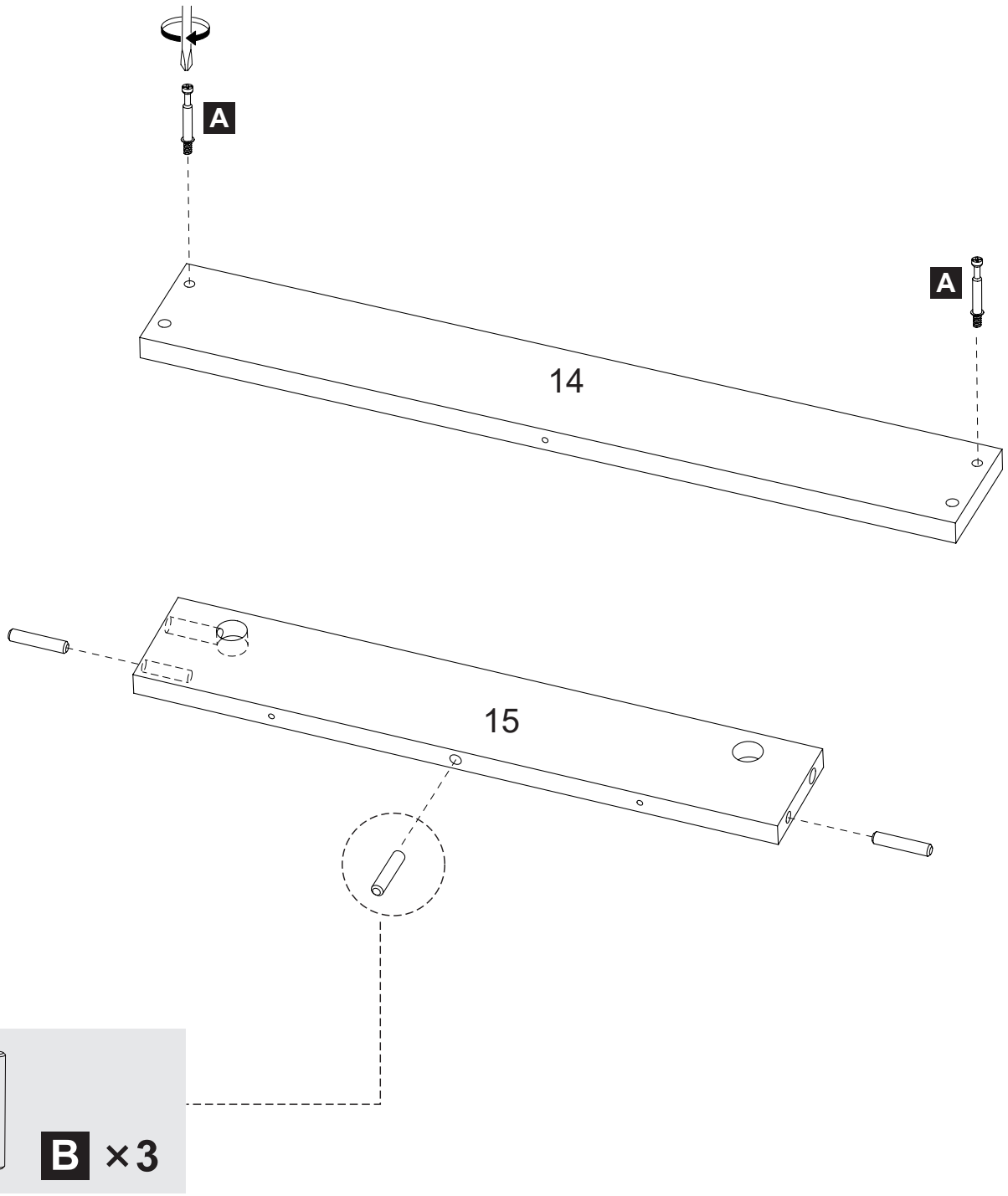

×2

Step 22

Please note that the hole indicated by fingers on the steel frame should face inward.

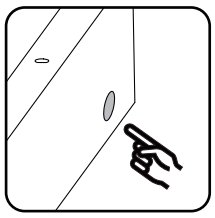

FACE
INWARD

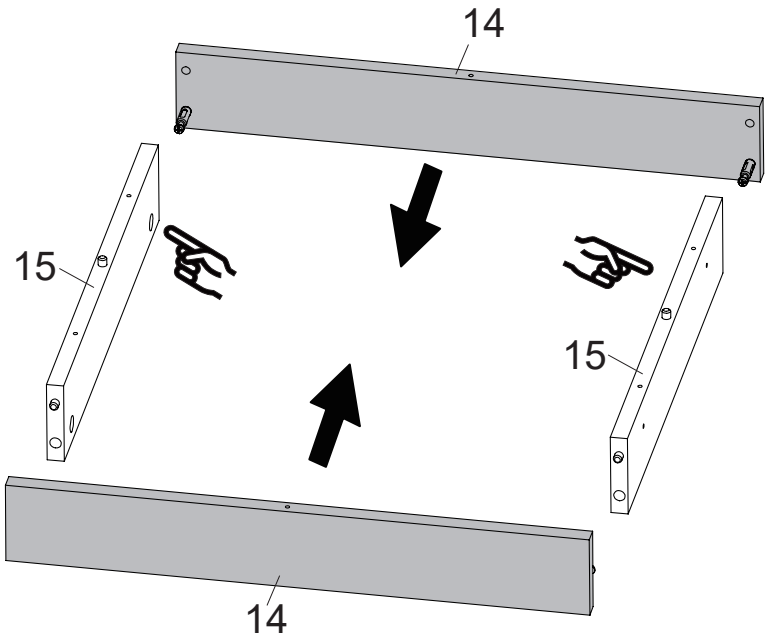

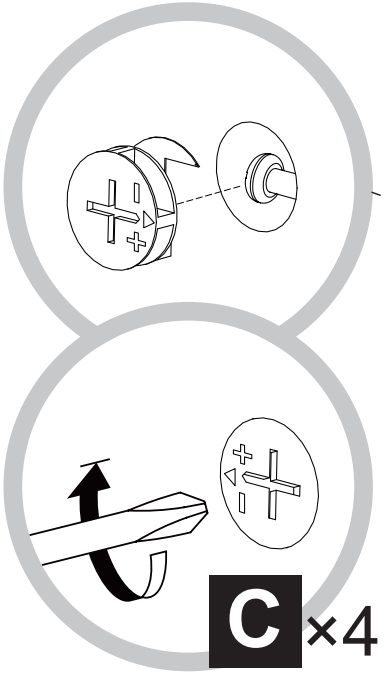

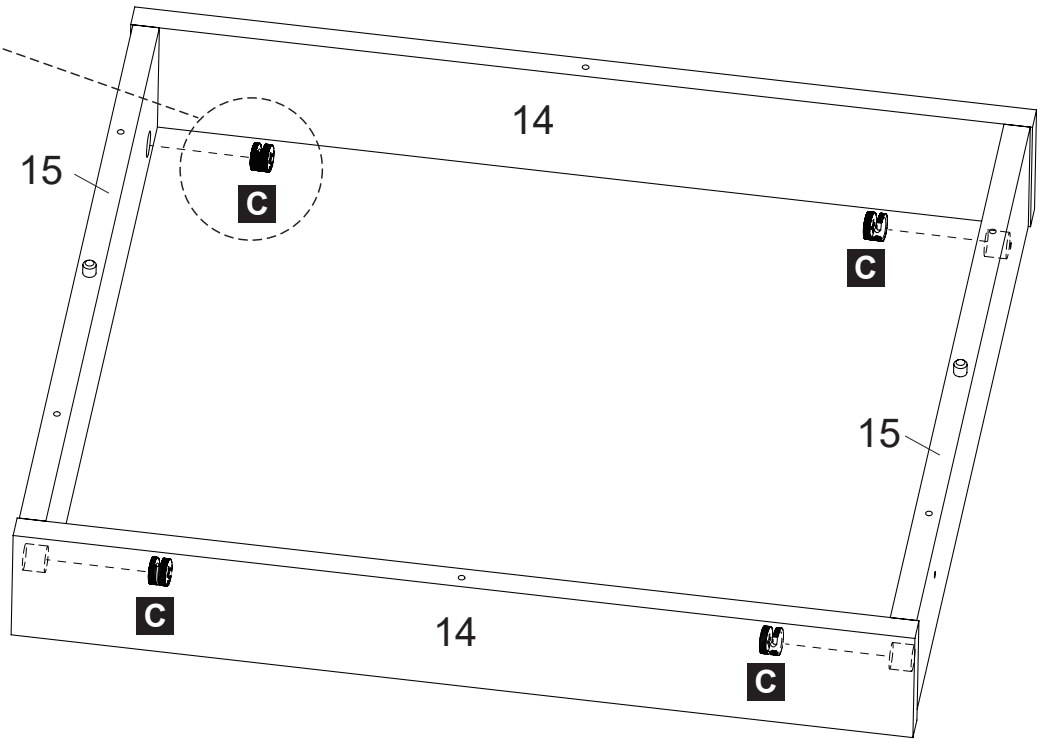

Step 23

Please fully tighten all the screws after they are in right place.

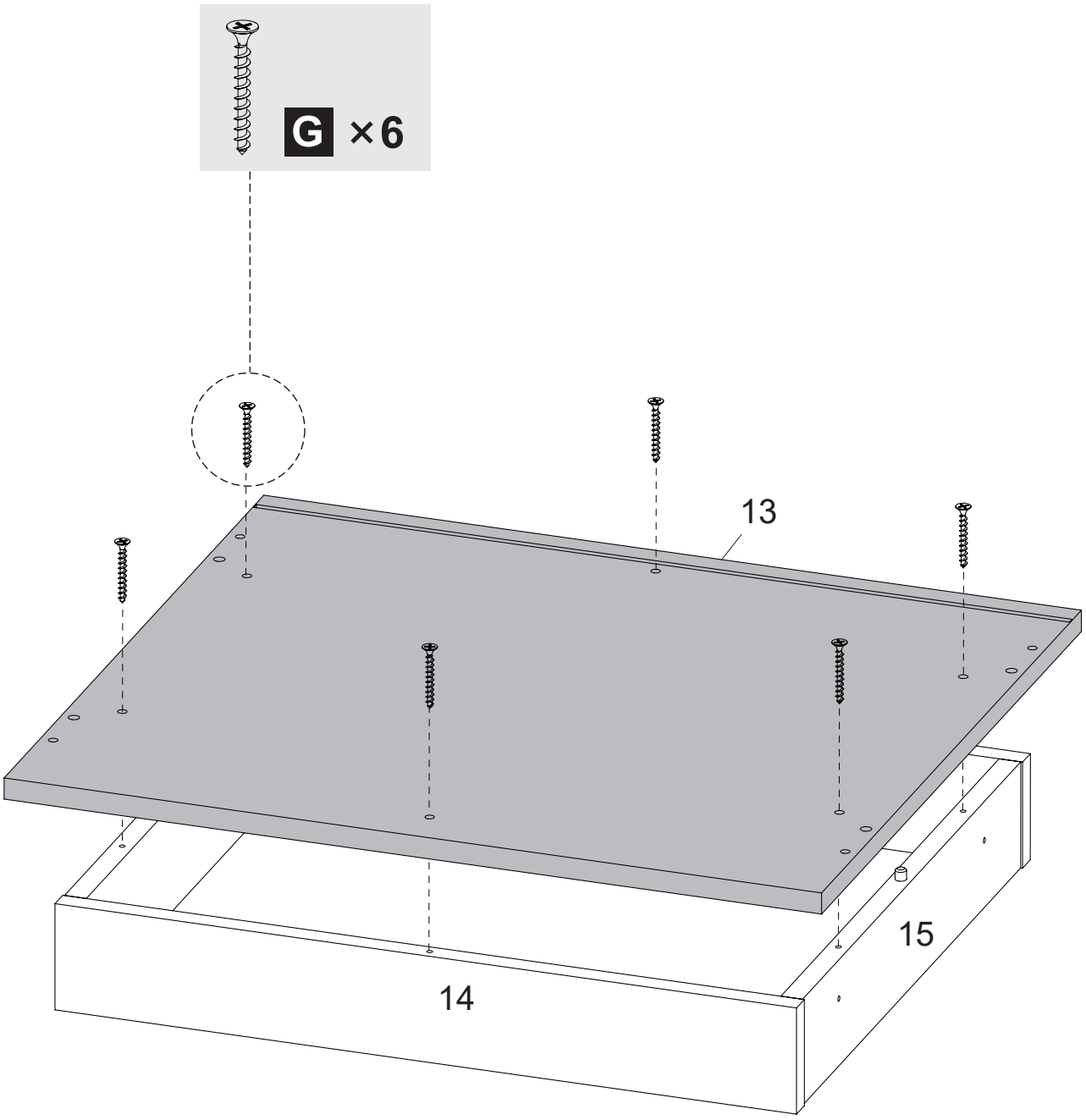

Step 24

Please fully tighten all the screws after they are in right place.

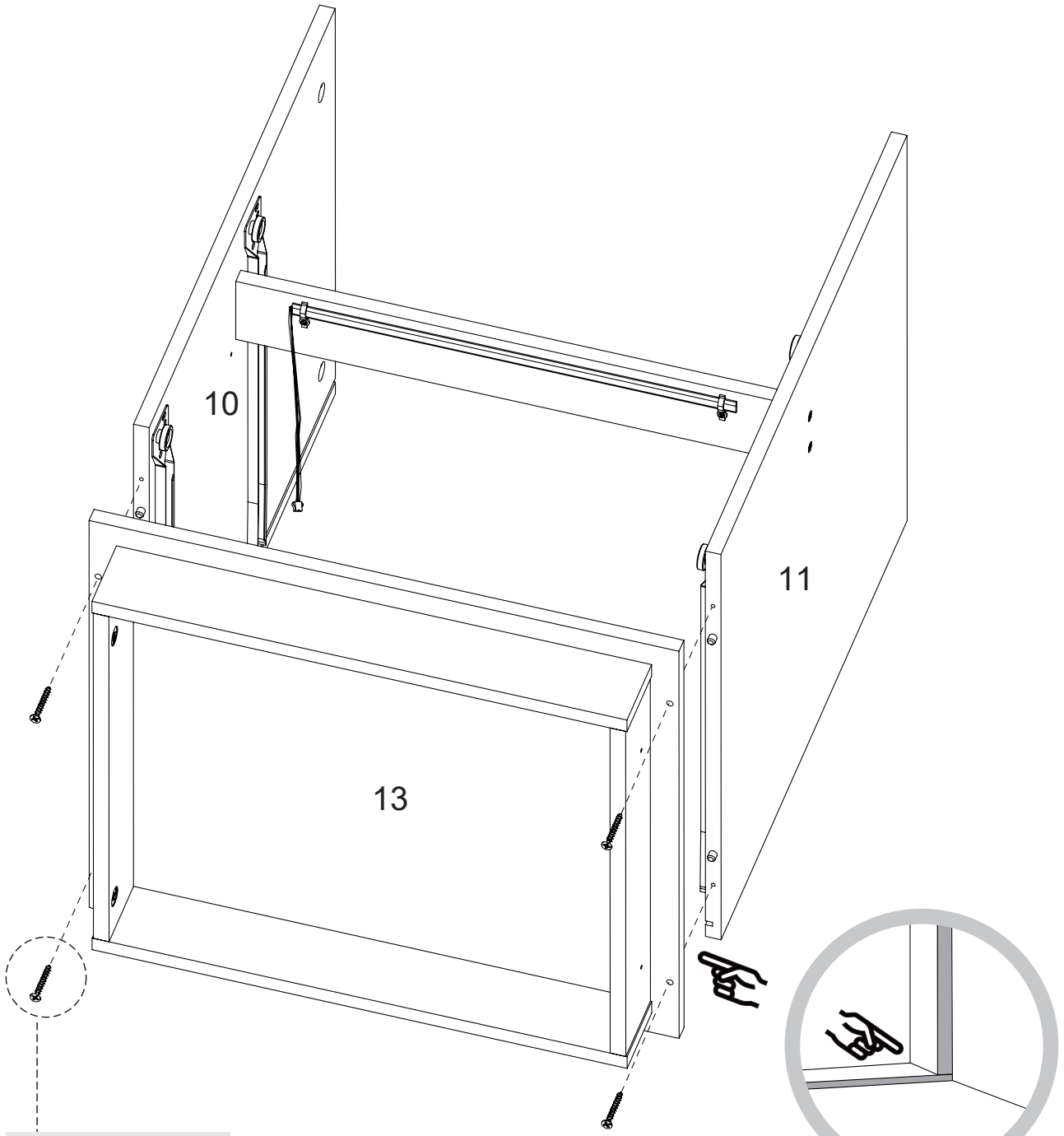

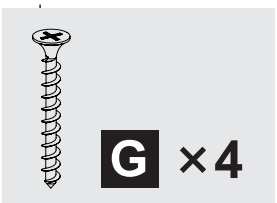

Let the grooves on part **10** and part **11** be connected to the groove on part **13** .

Step 25

1. When installing the LED strip, do not cover the upper holes. Keep it about 5 mm away from the hole edges.
2. Please pay attention to the position of the type of plugs during installation.

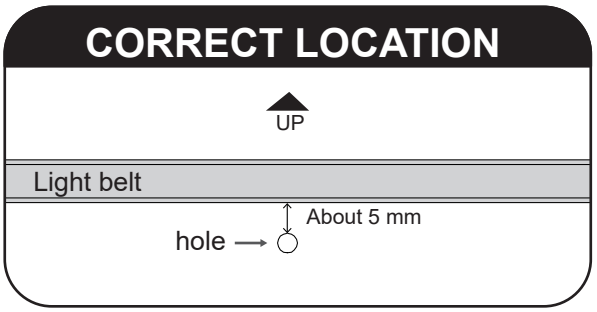

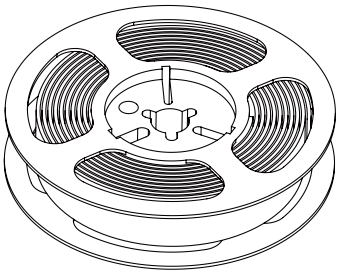

M1

M1

Long

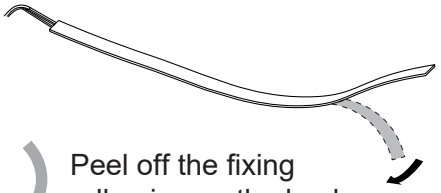

Peel off the fixing adhesive on the back of the part M1.

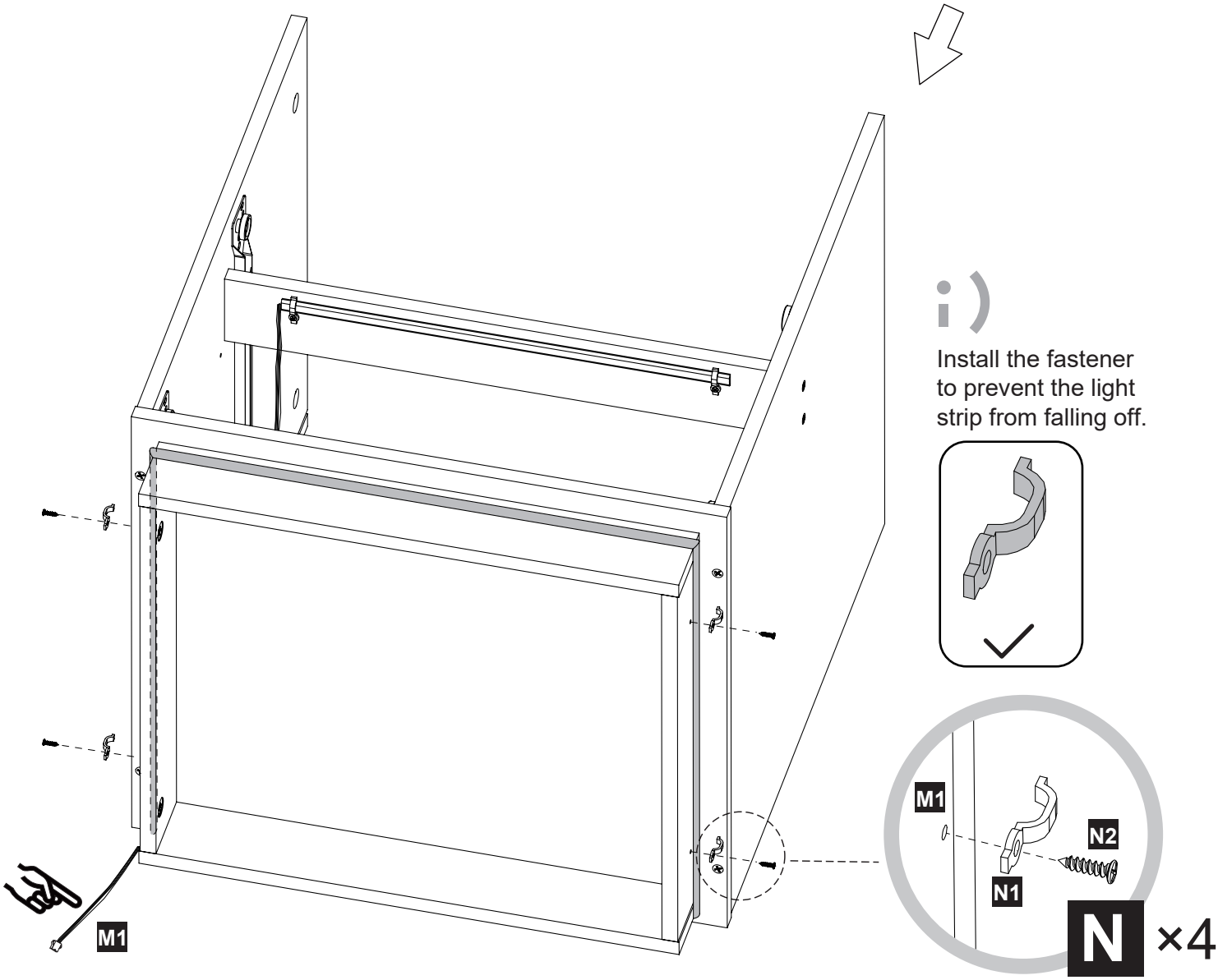

Install the fastener to prevent the light strip from falling off.

Step 26

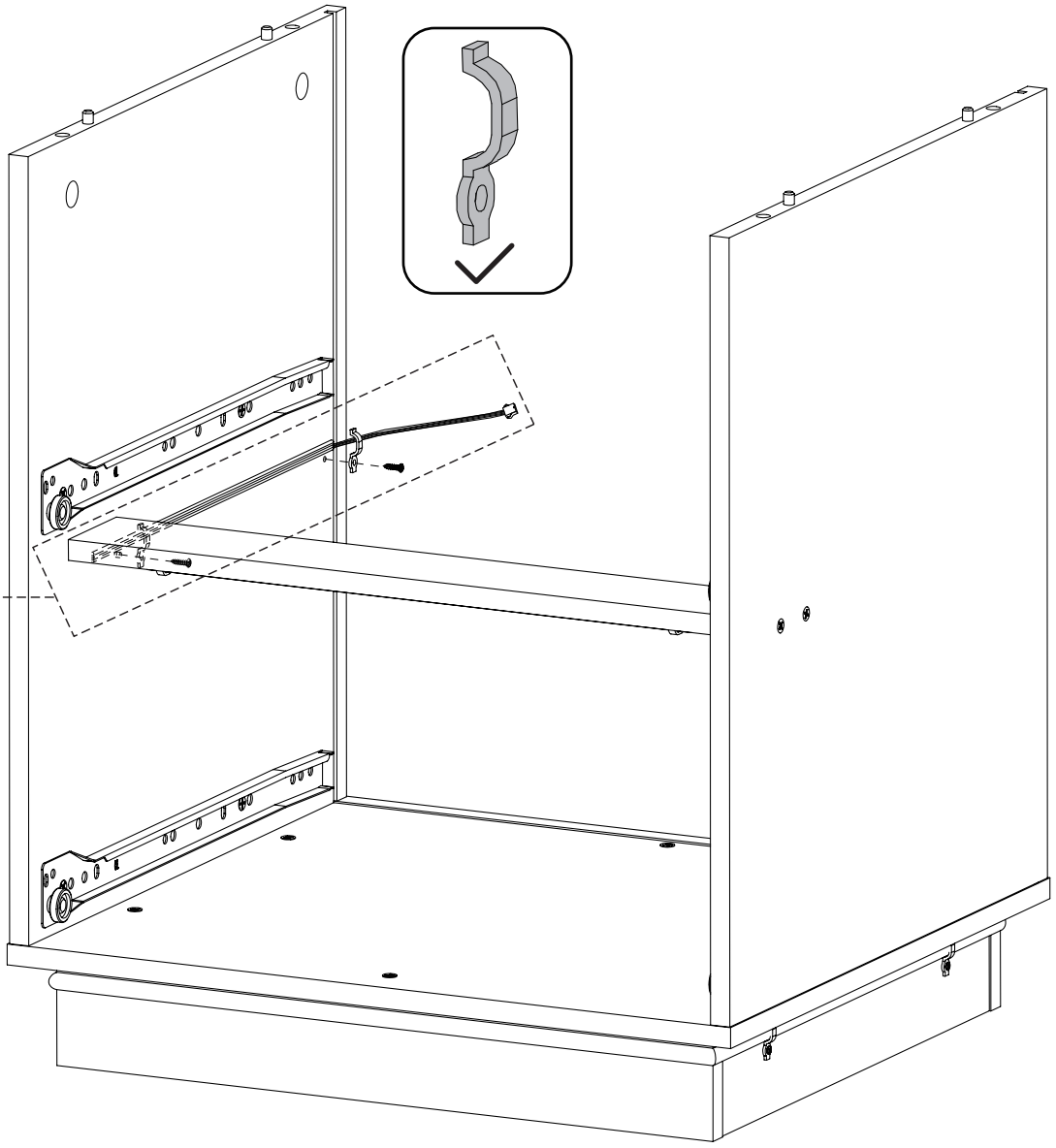

N ×2

Install the fastener to prevent the light strip from falling off.

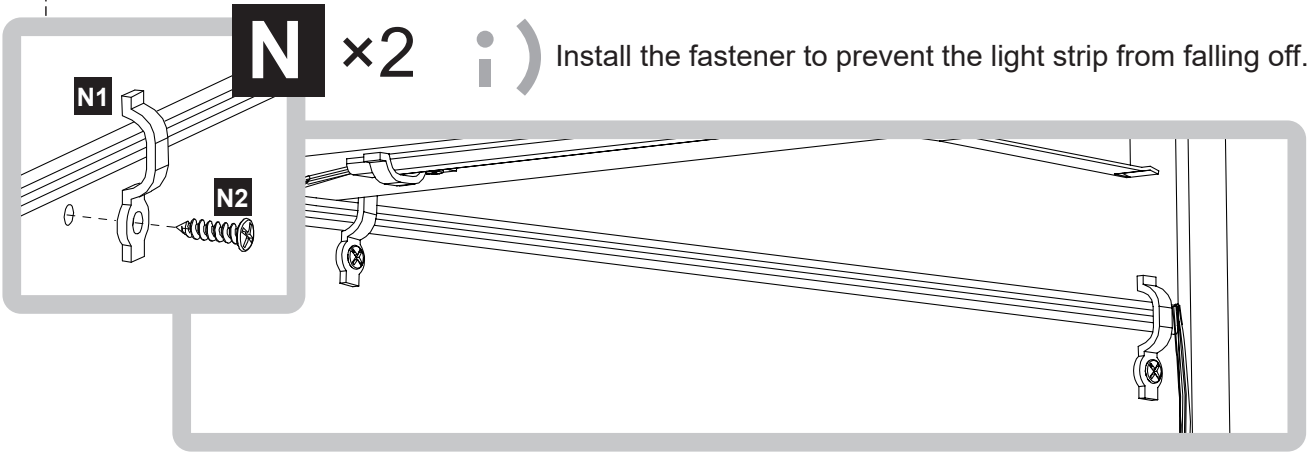

Step 27

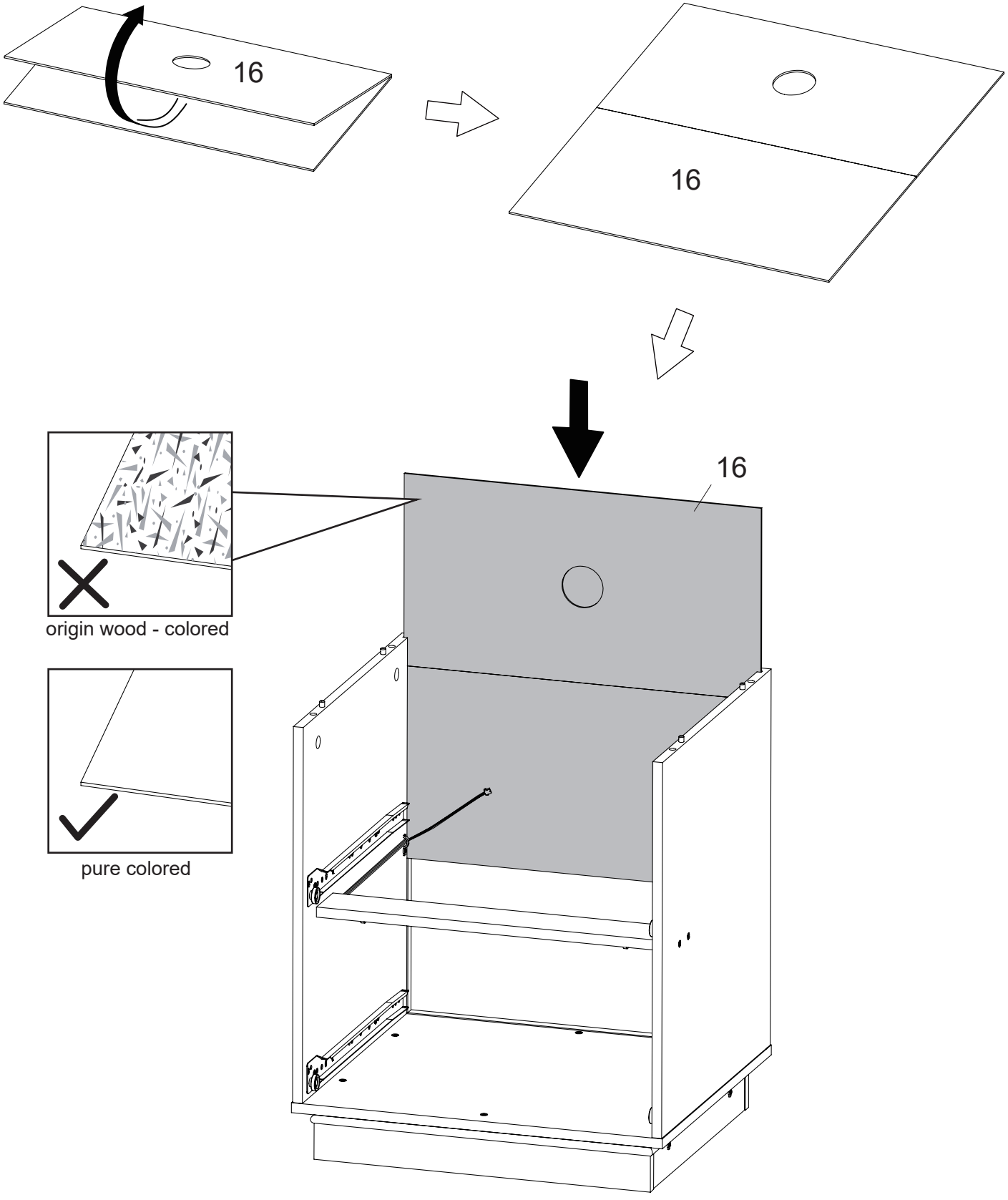

Step 28

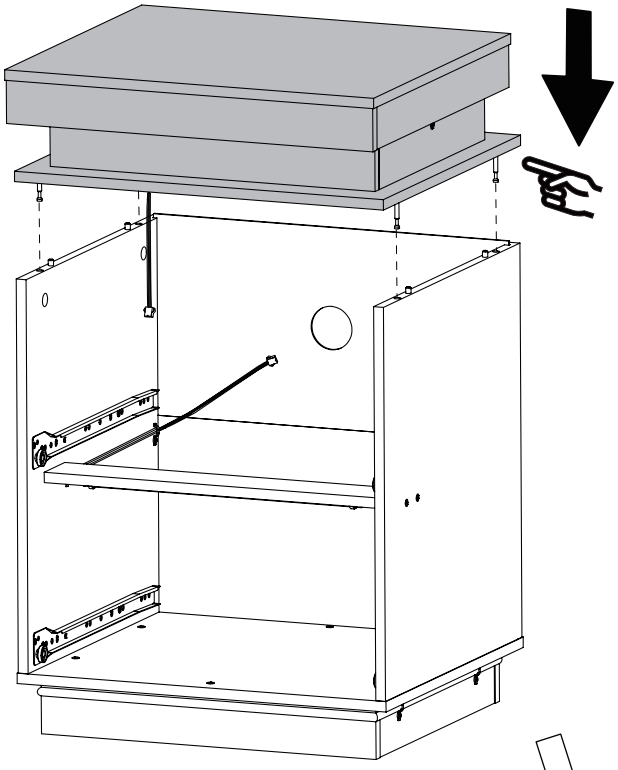

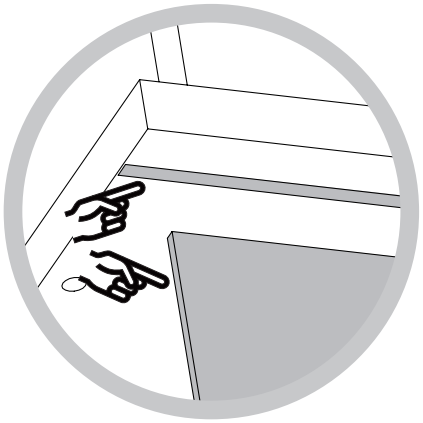

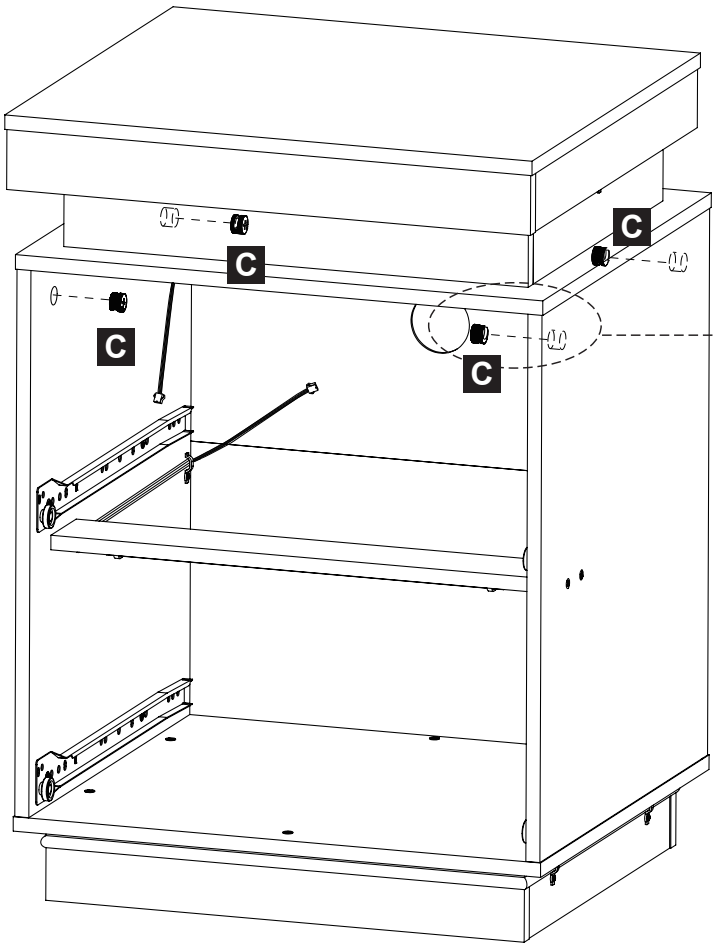

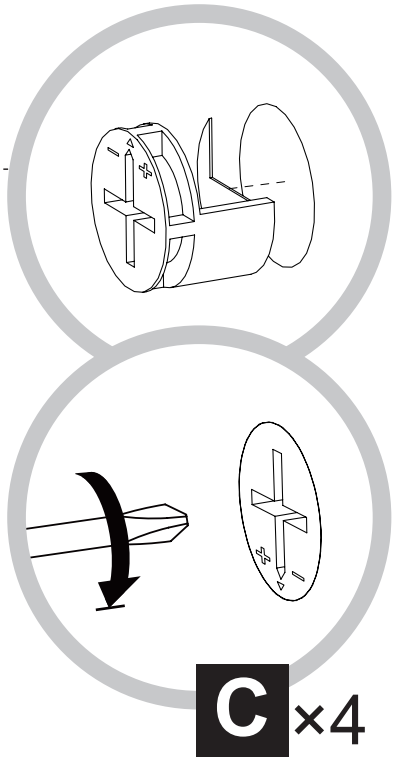

C ×4

Step 29

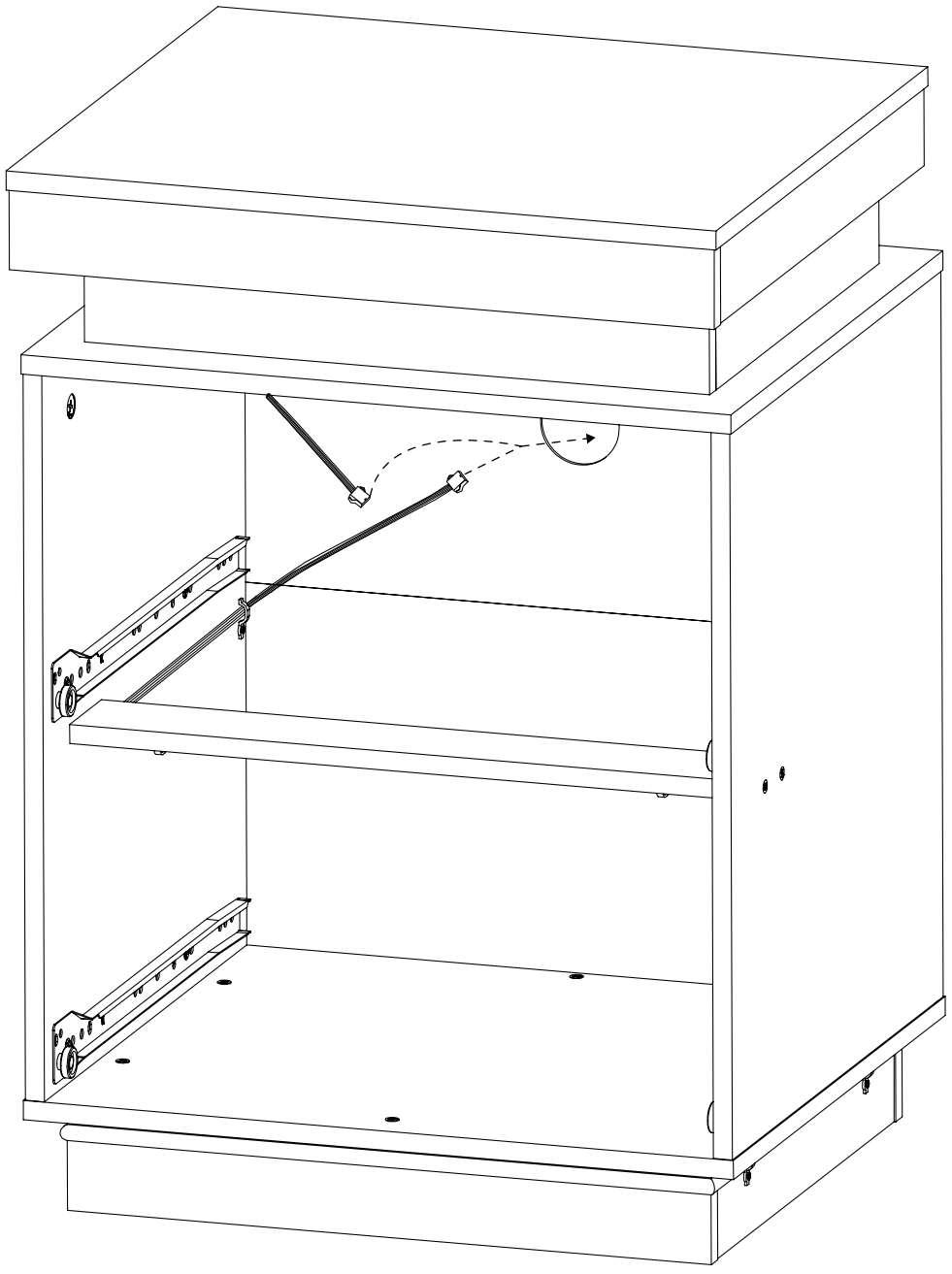

Step 30

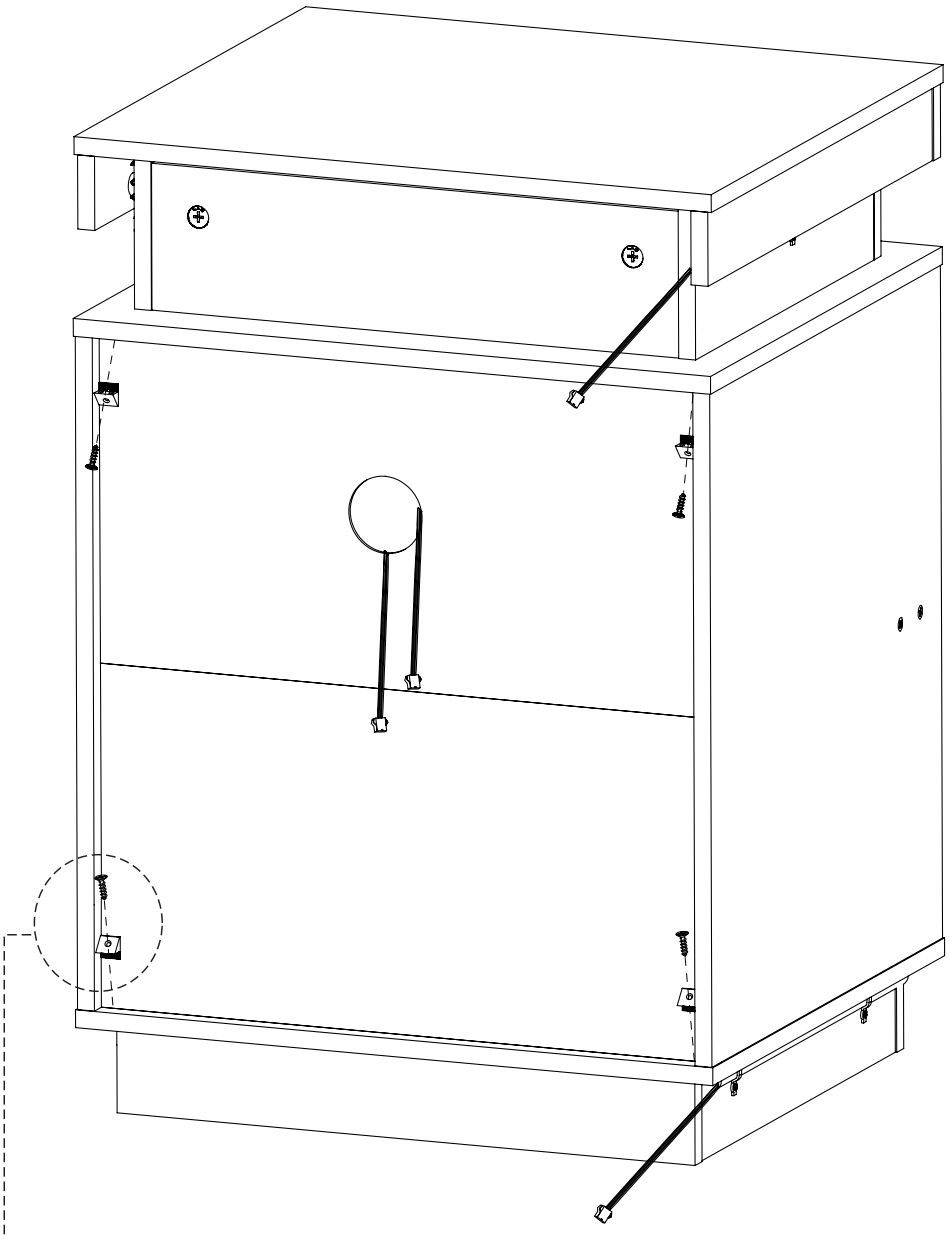

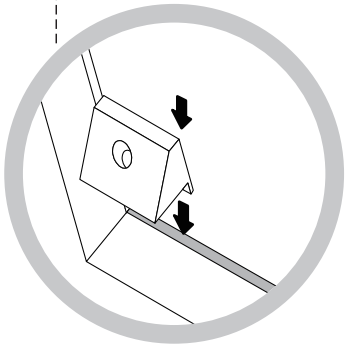

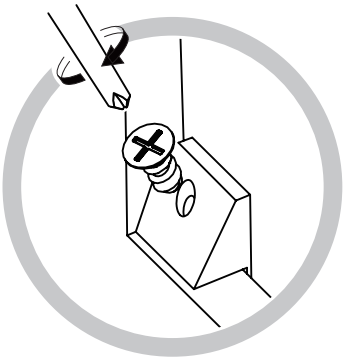



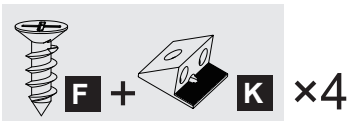

Step 31

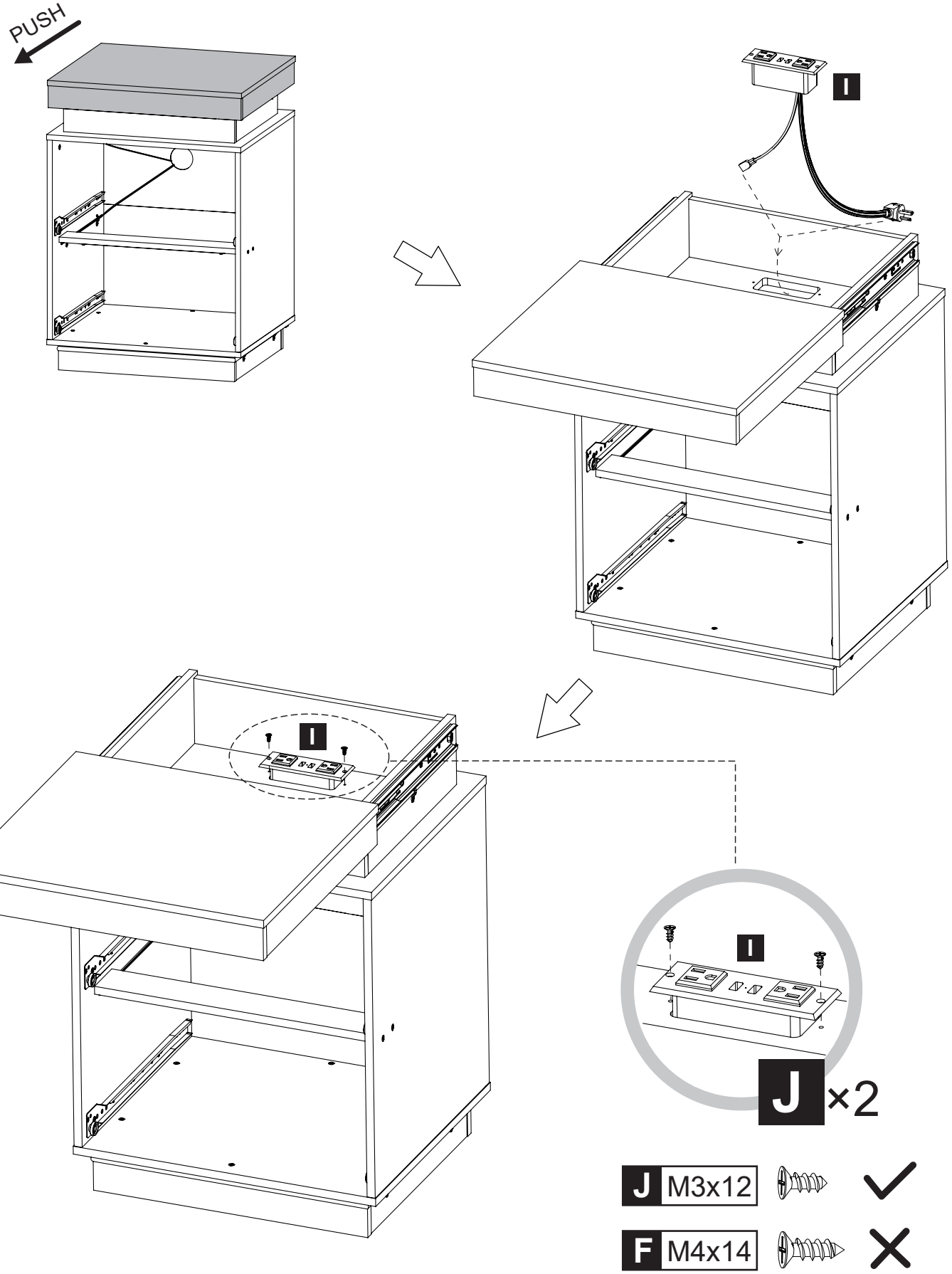

Step 32

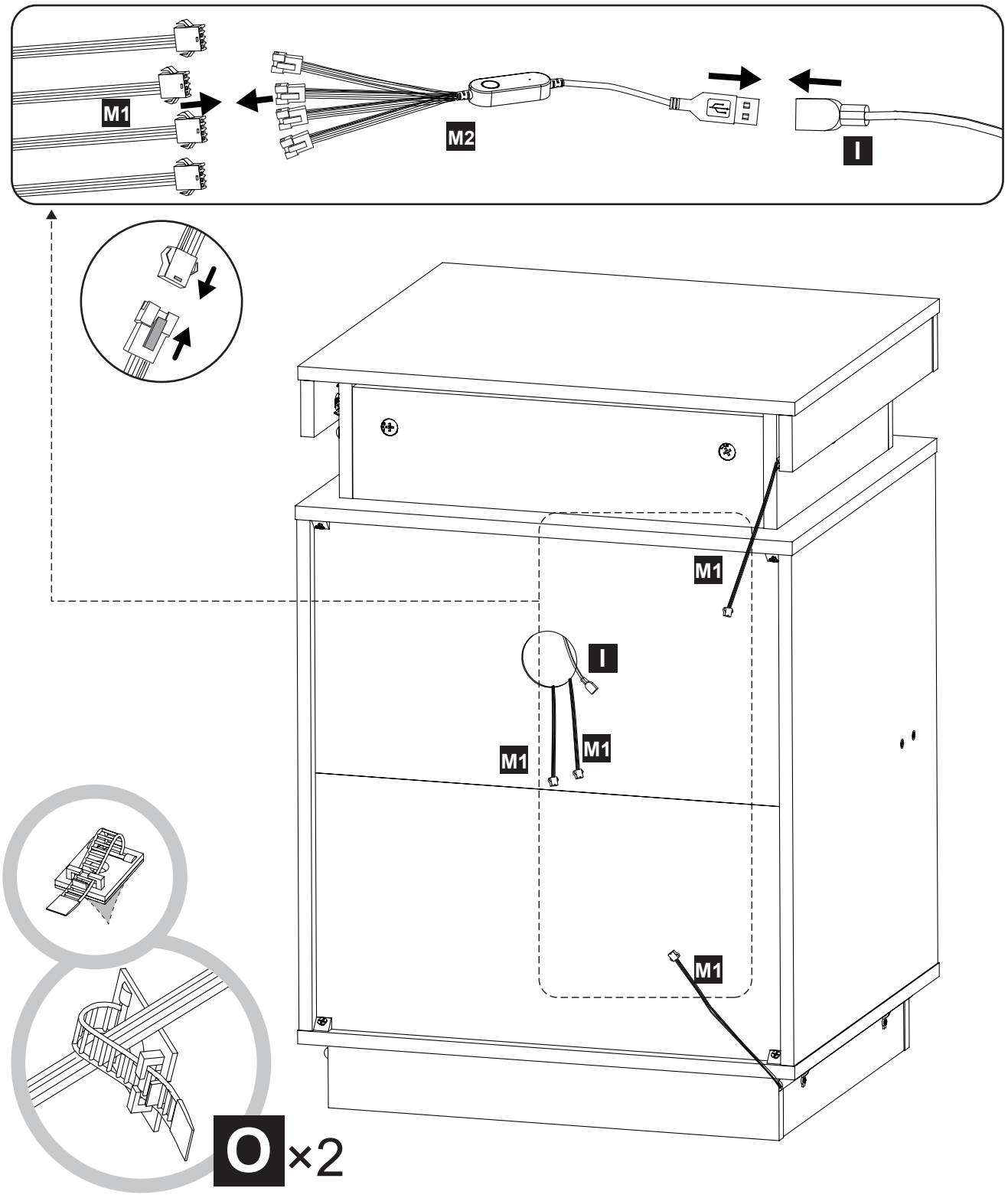

Cable Organizer with Adhesive Pad — Attach to the back of your nightstand.

Recommended placement: top-left or top-right corner

This allows the controller cable to easily reach you at the front of the nightstand, keeping cords tidy and within convenient reach.

Step 33

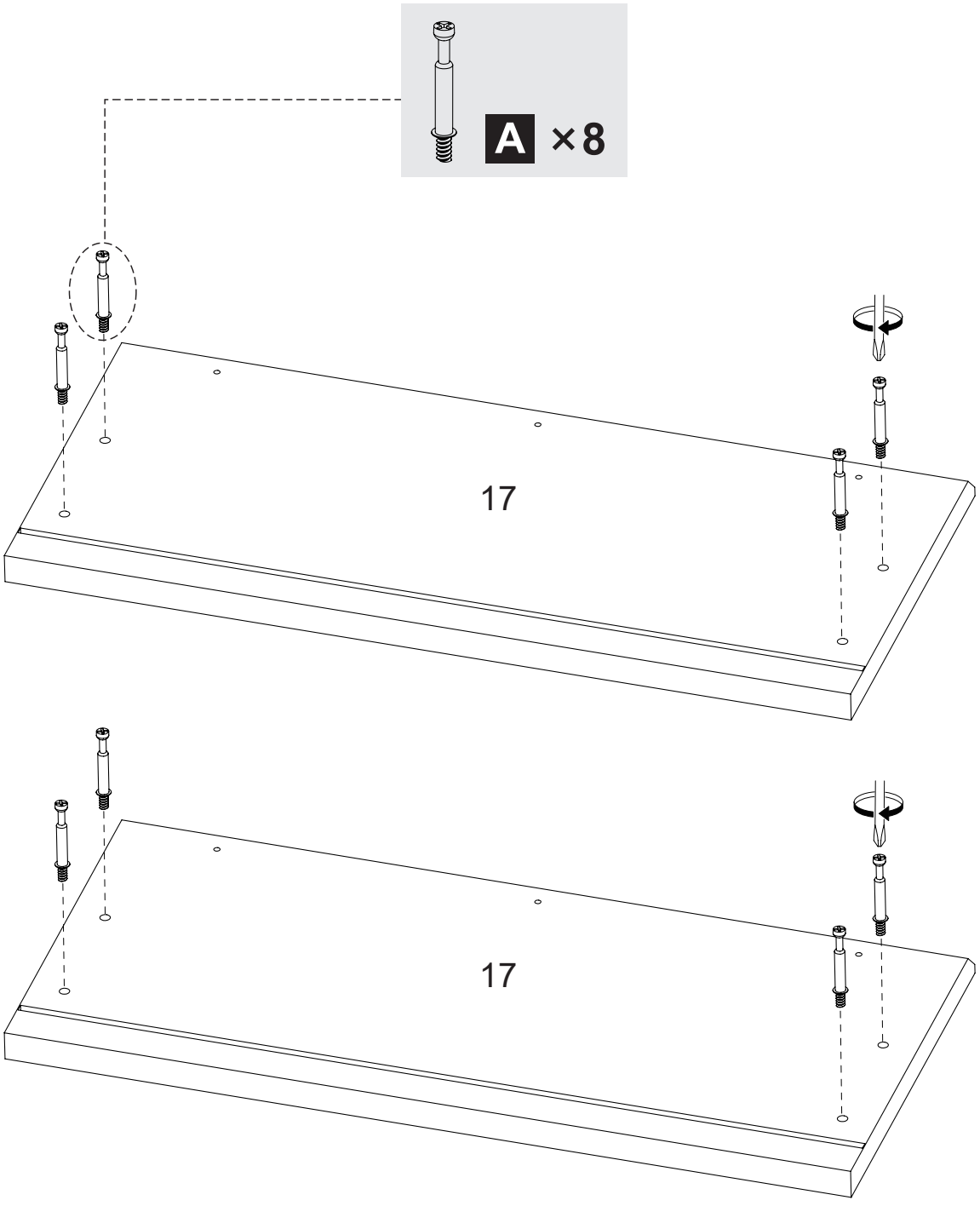

Step 34

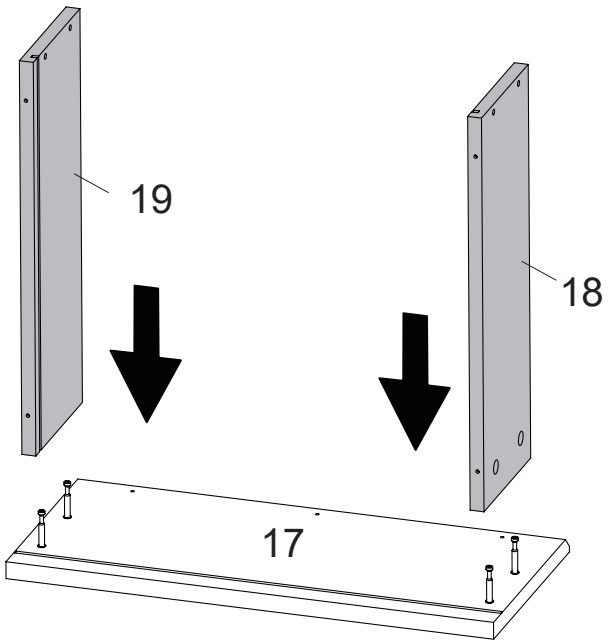

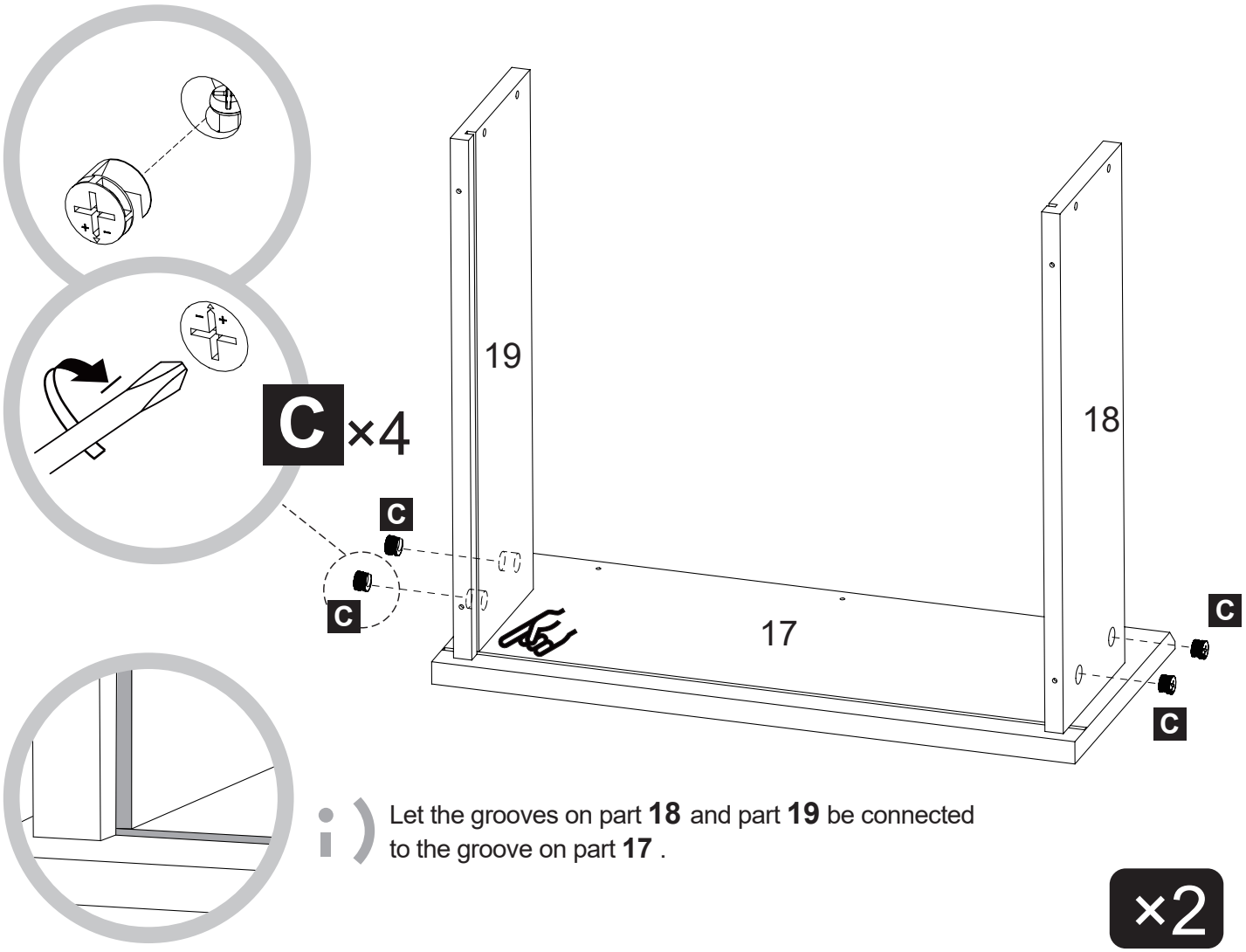

Let the grooves on part **18** and part **19** be connected to the groove on part **17** .

×2

Step 35

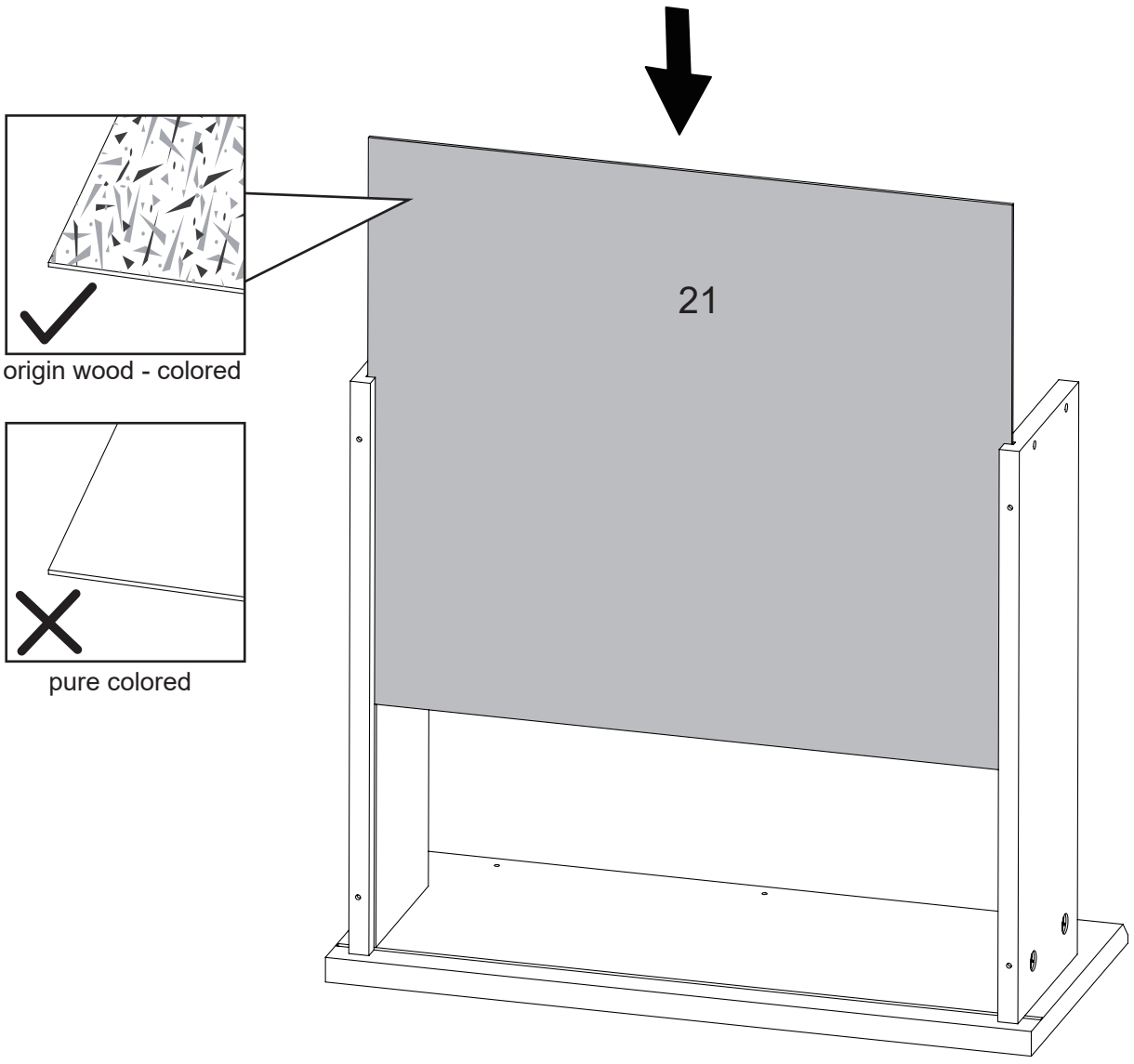

×2

Step 36

Please fully tighten all the screws after they are in right place.

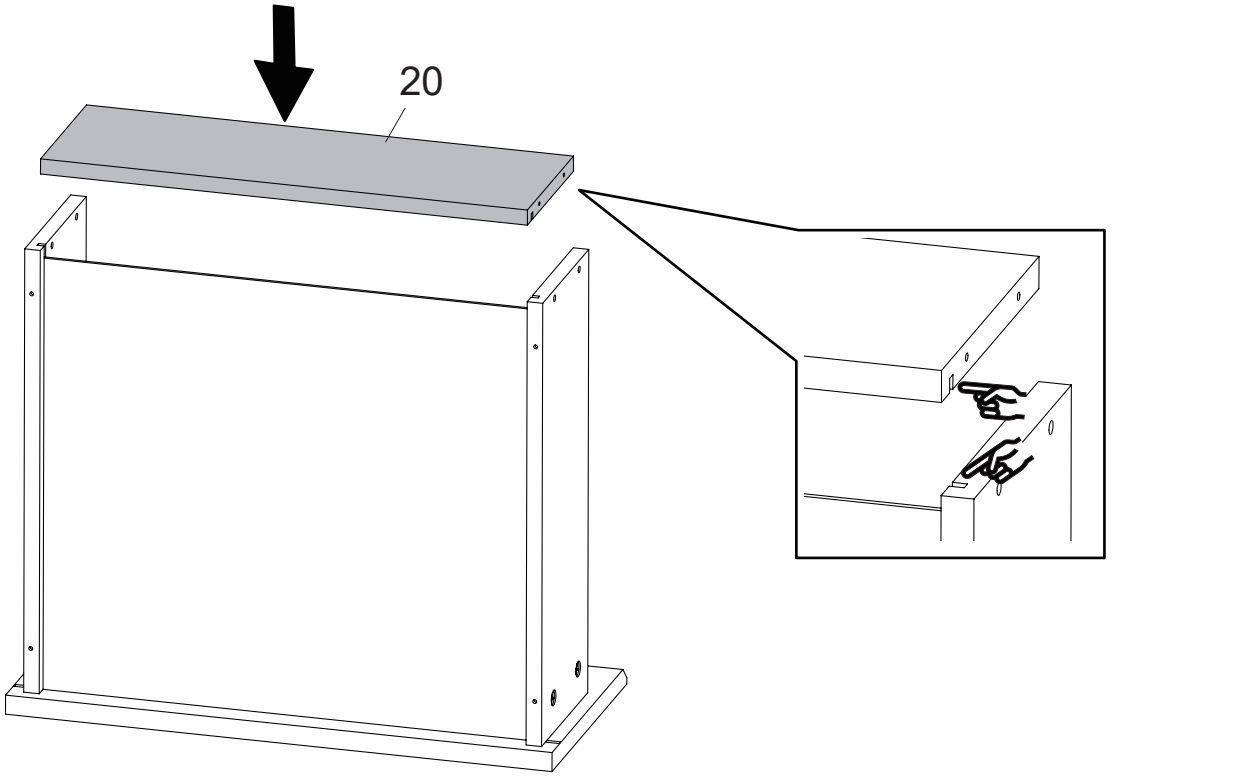

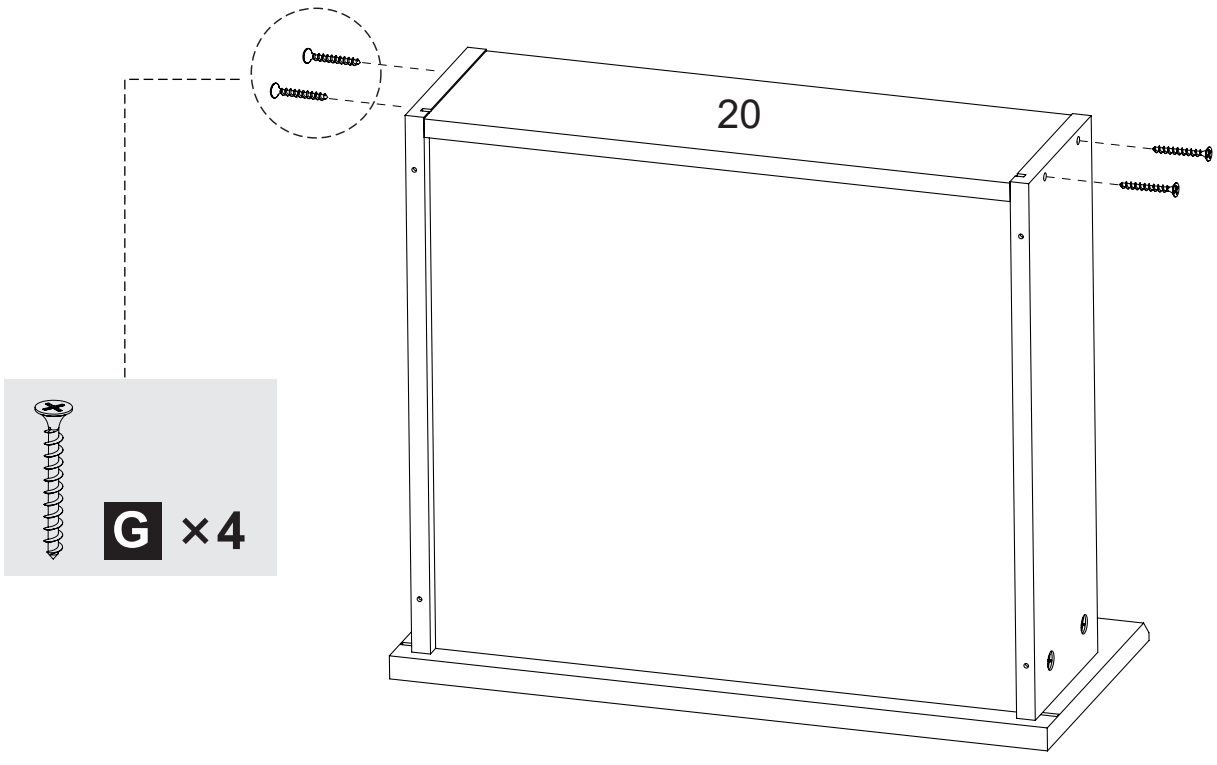

×2

Step 37

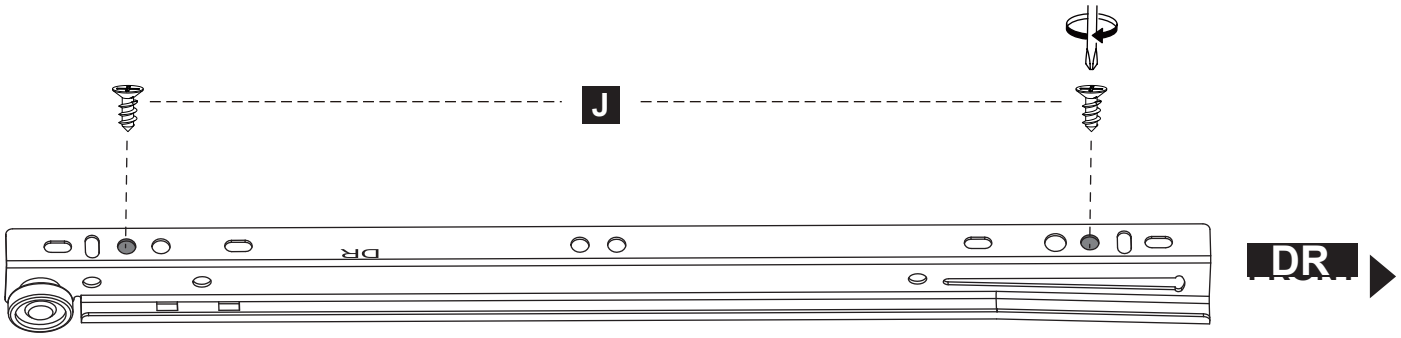

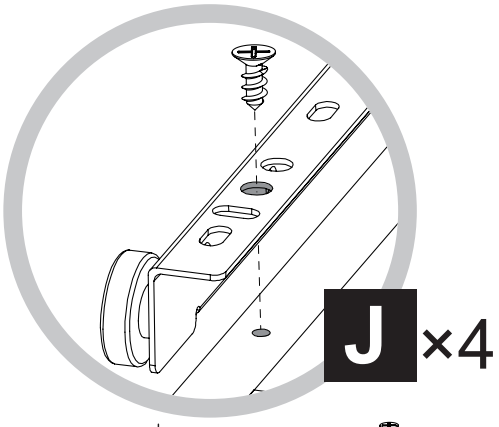

J M3x12 ✓

F M4x14 ✗

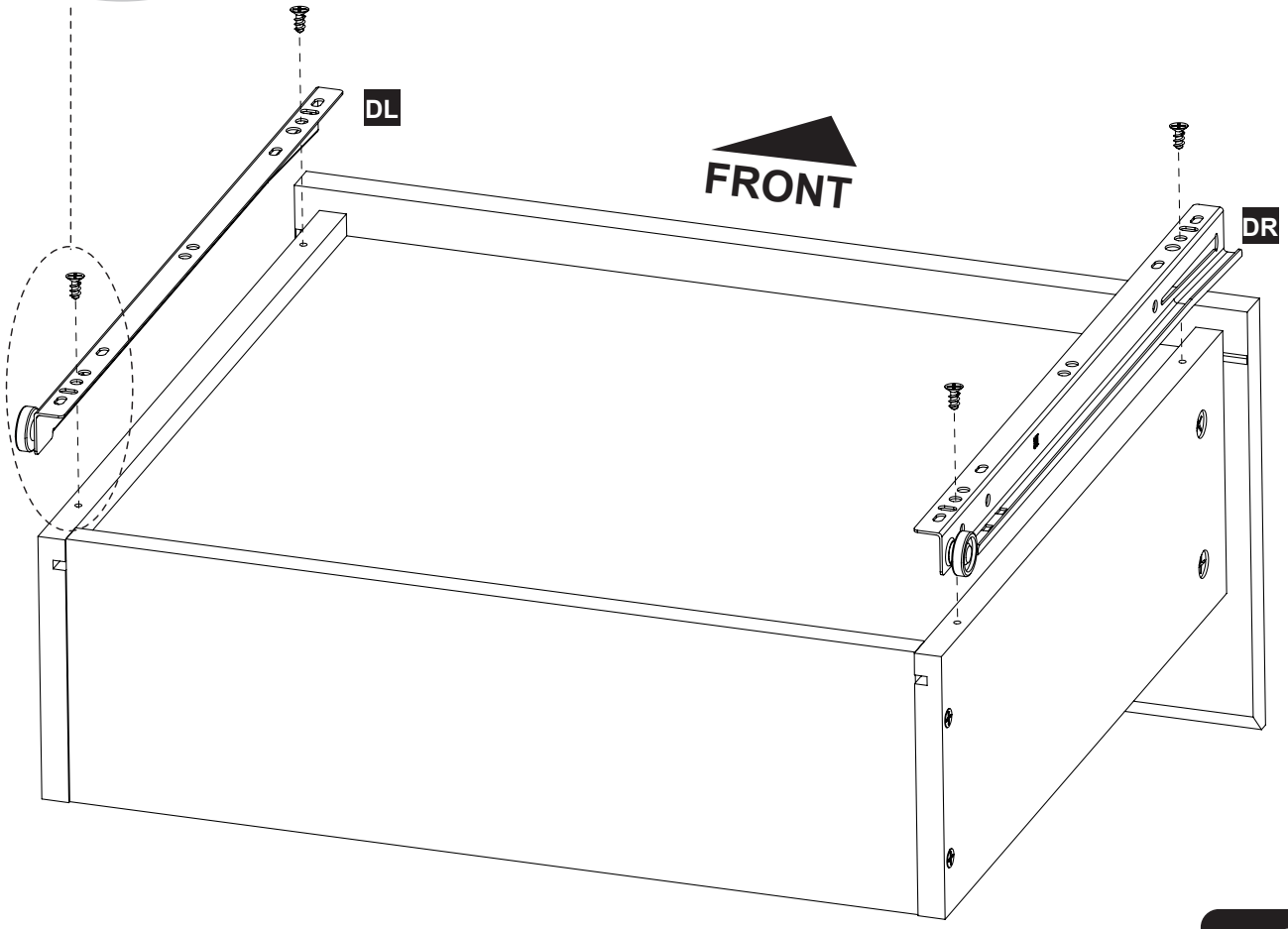

×2

Step 38

Peel off the protective film from both sides of Panel **H**, then proceed with installation.

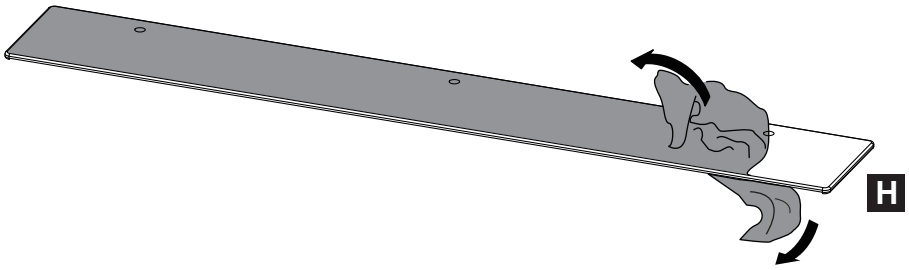

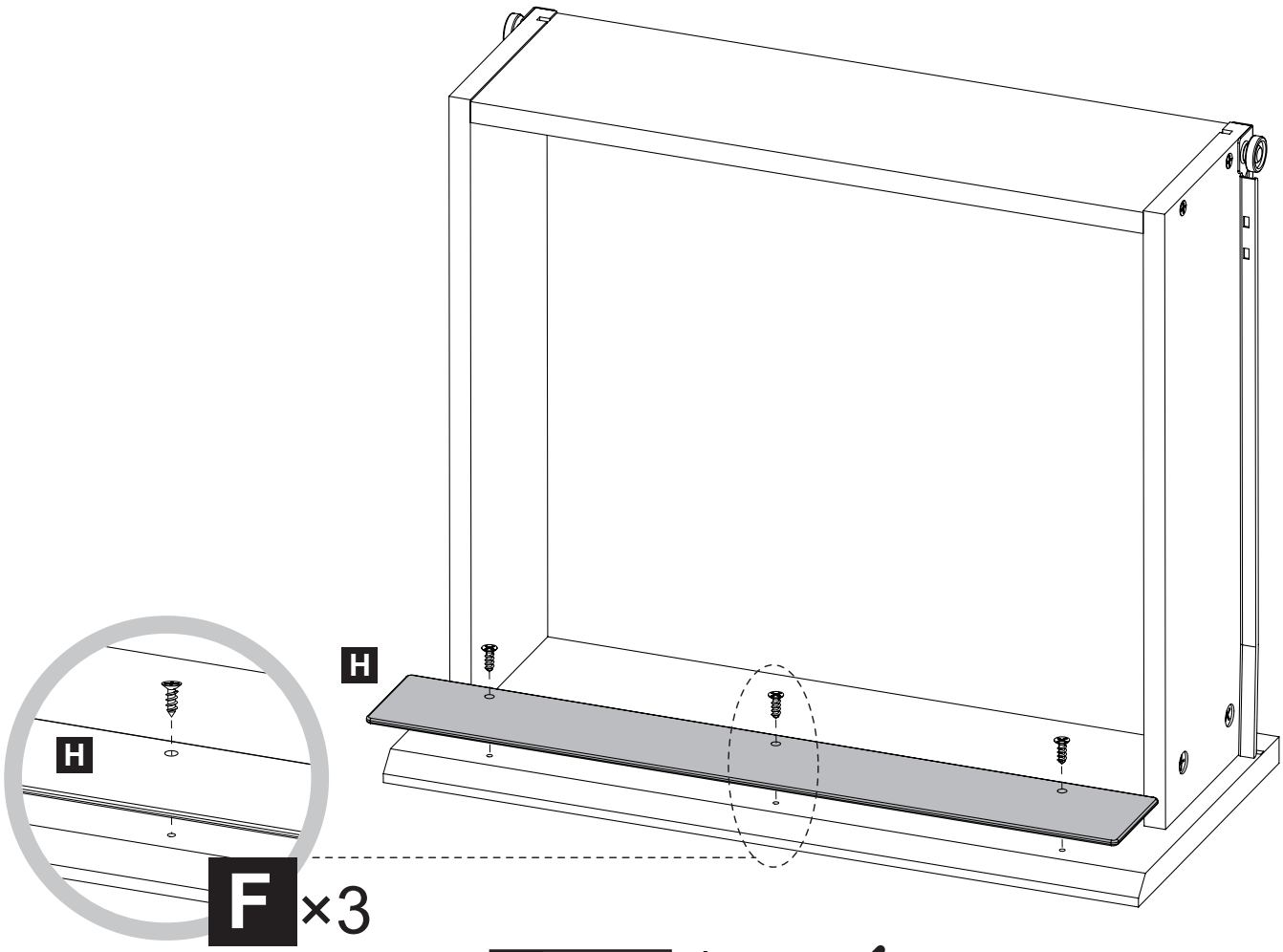

F M4x14 ✓

J M3x12 ✗

×2

Step 39

Please paste the hole sticker according to actual needs.

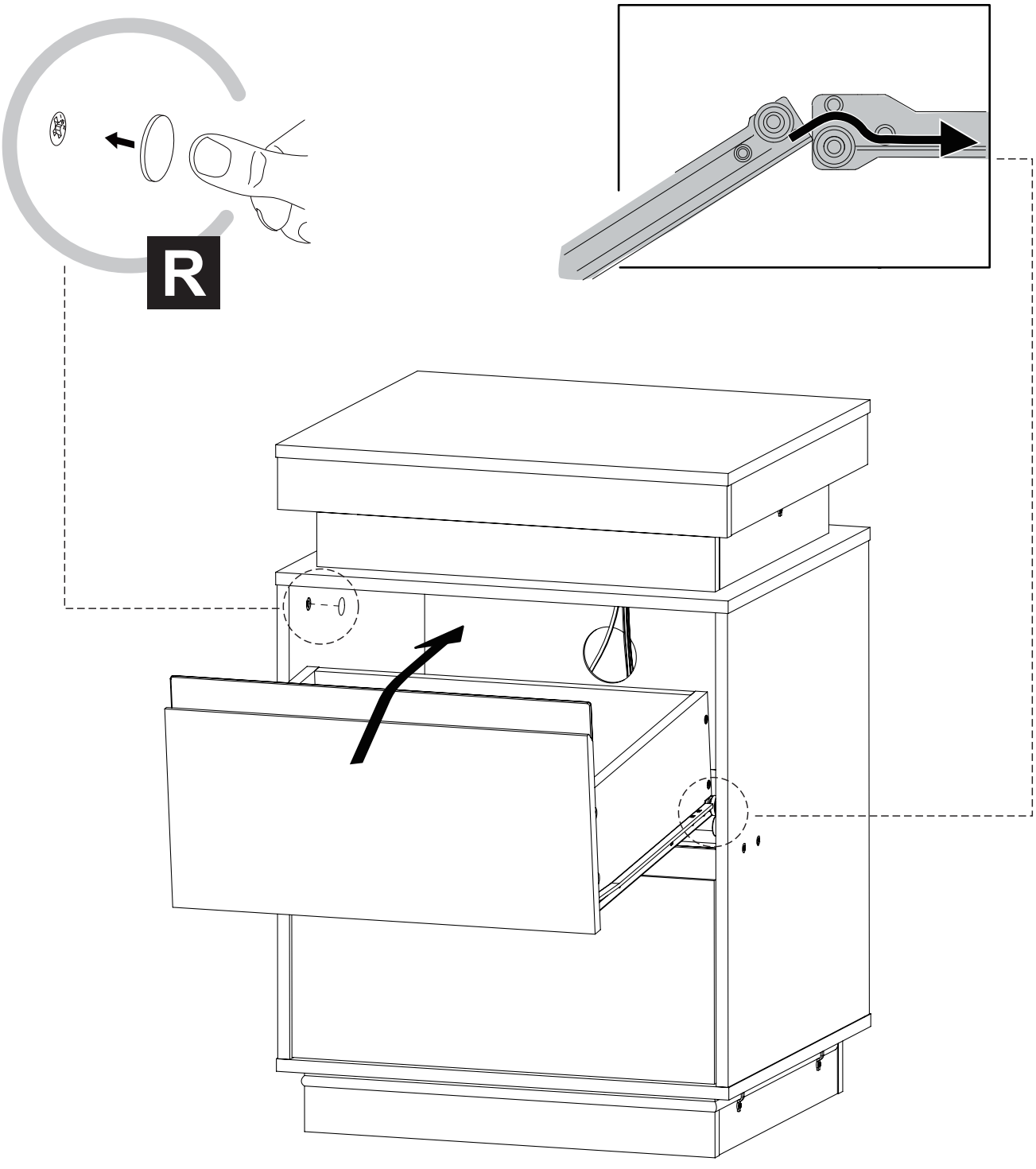

User instruction
for led strip light

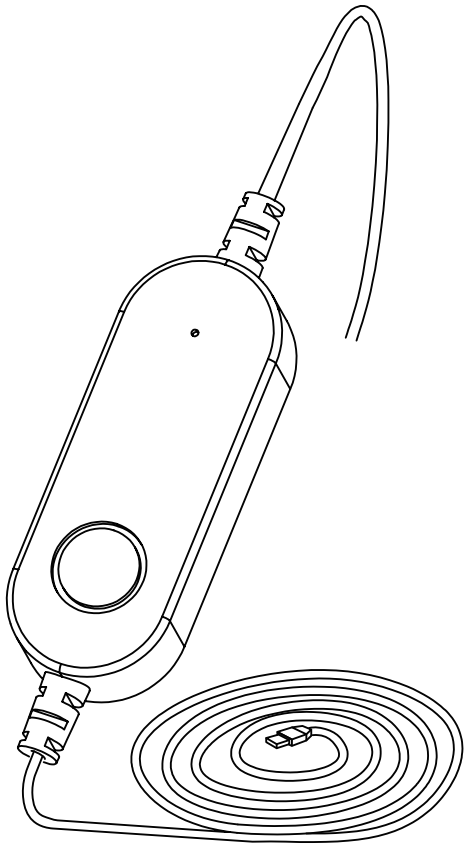

If you have any further questions, please feel free to contact our customer service，we will reply to you within 24 hours.

CE RoHS FC

Instructions for use of led controller

IOS and Android system can download the APP on the cell phone to control the lighting.

1. There are the following ways to download the APP





2. Use APP to connect lighting devices by following the provided.

⚠ WARNING

★ DO NOT IMMERSE IN FIRE

★ CHILDREN UNDER THE AGE OF 16 SHOULD USE THIS PRODUCT UNDER ADULT SUPERVISION.

Music Remote(Advanced Version)

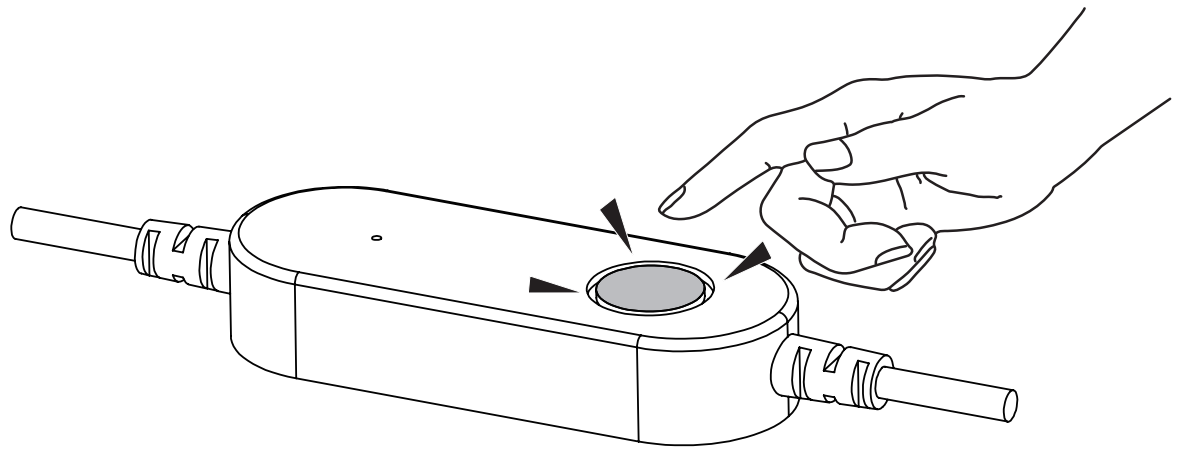

Integrated Control Switch Function Description:

1.Single Short Press: Pressing the switch once quickly turns on the light.

2.Single Short press (again): Change light Mode and Color (There are a total of 40 light modes and colors available, and each press cycles through them.)

3.Single long press for 3 seconds: Turn off the light.

Click the Settings button to access the app settings and instructions

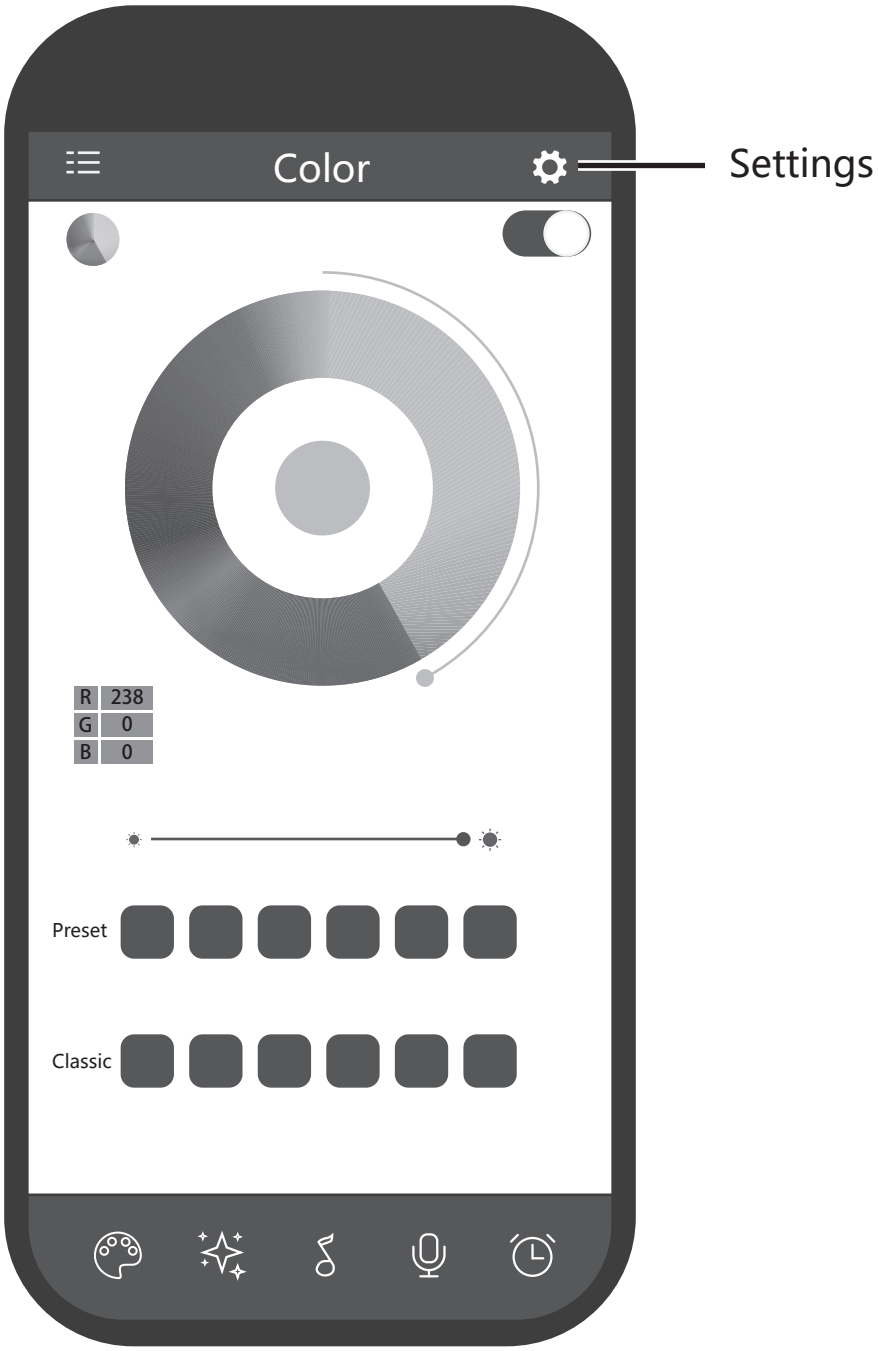

Settings

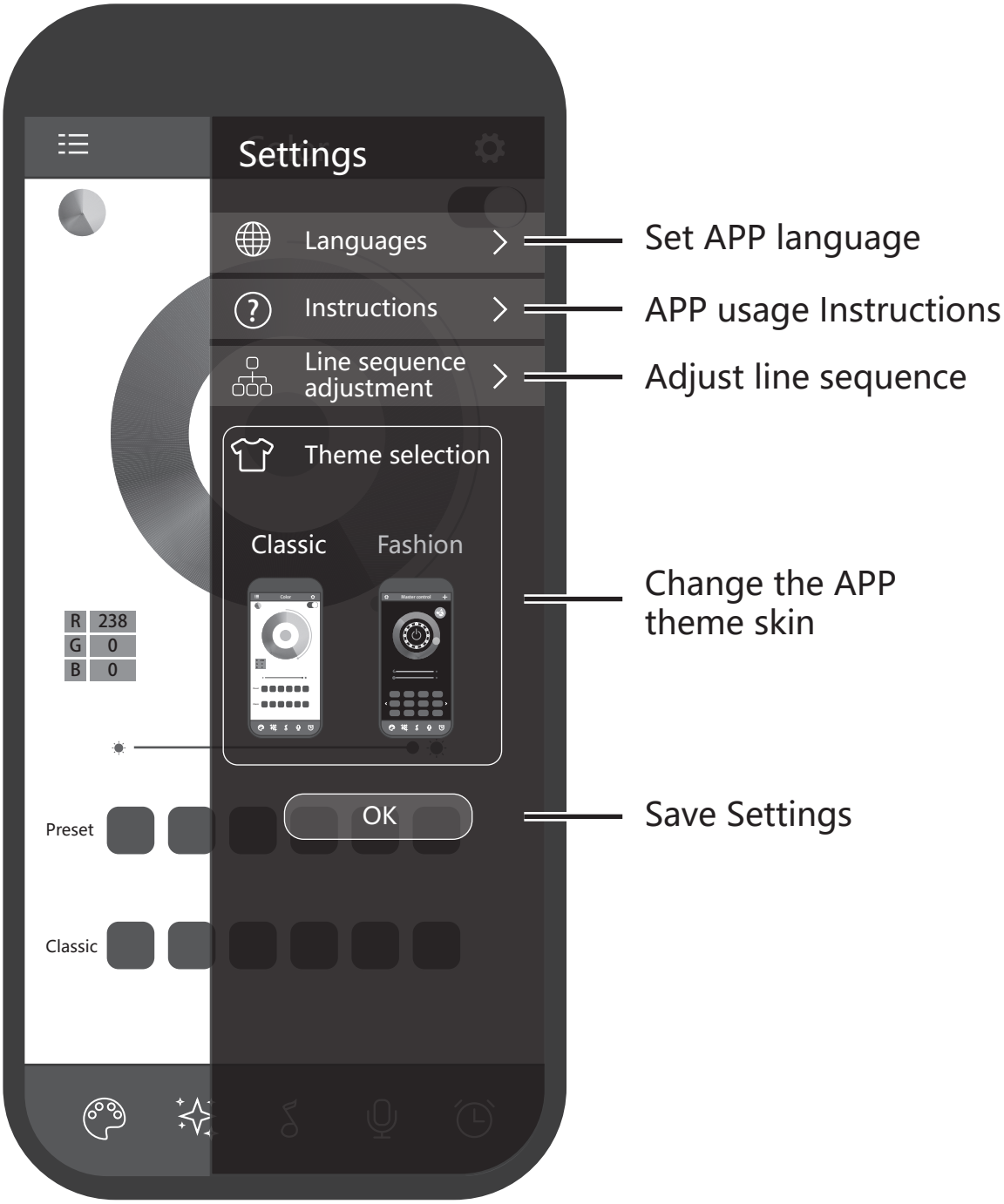
Settings
Languages
Instructions
Line sequence adjustment
Theme selection
Classic
Fashion
R 238
G 0
B 0
OK
Preset
Classic
Set APP language
APP usage Instructions
Adjust line sequence
Change the APP theme skin
Save Settings

Instructions

Swipe right to view the app's usage instructions

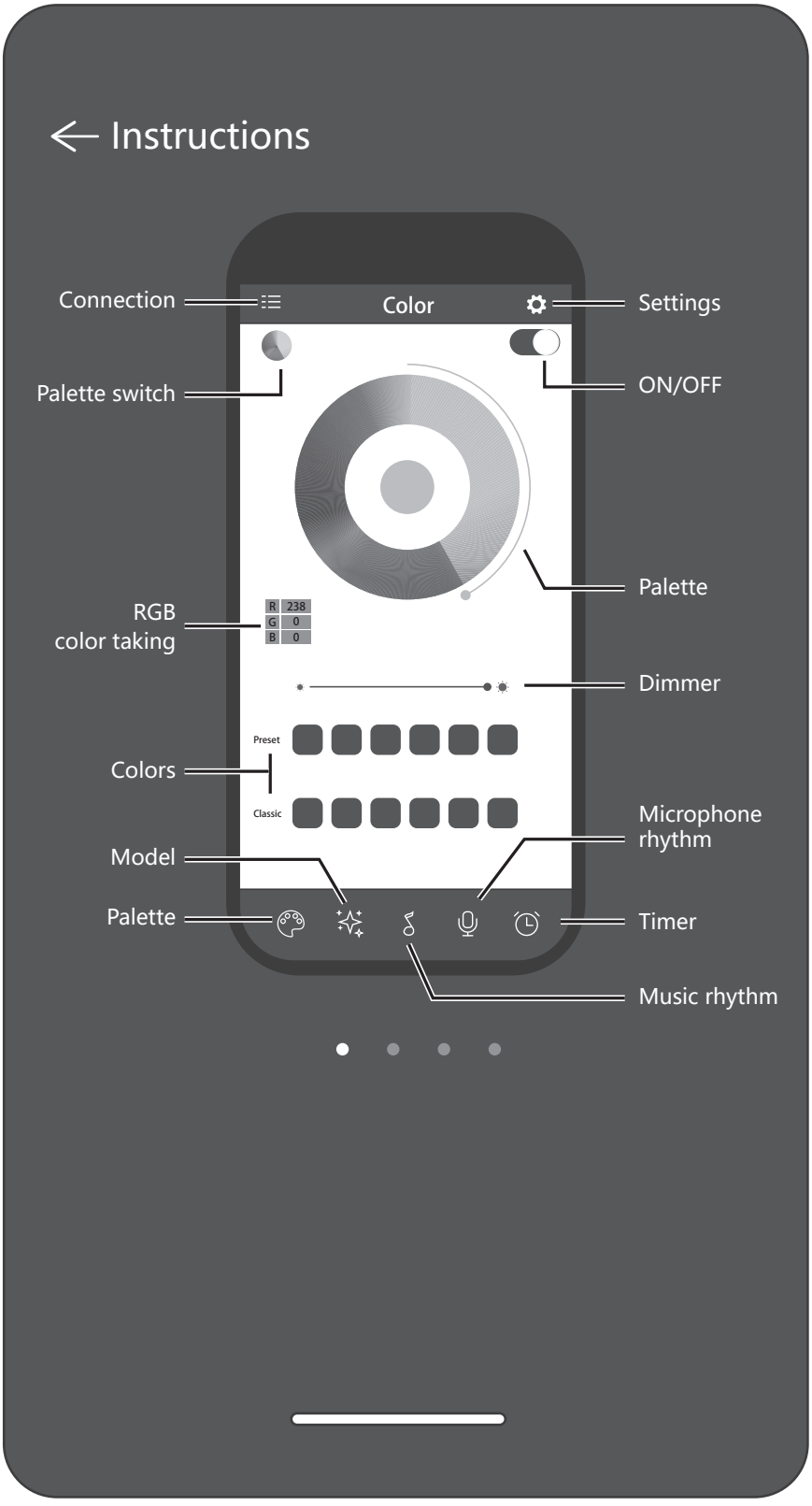

Line sequence adjustment

Select the light sequence of the lamp band

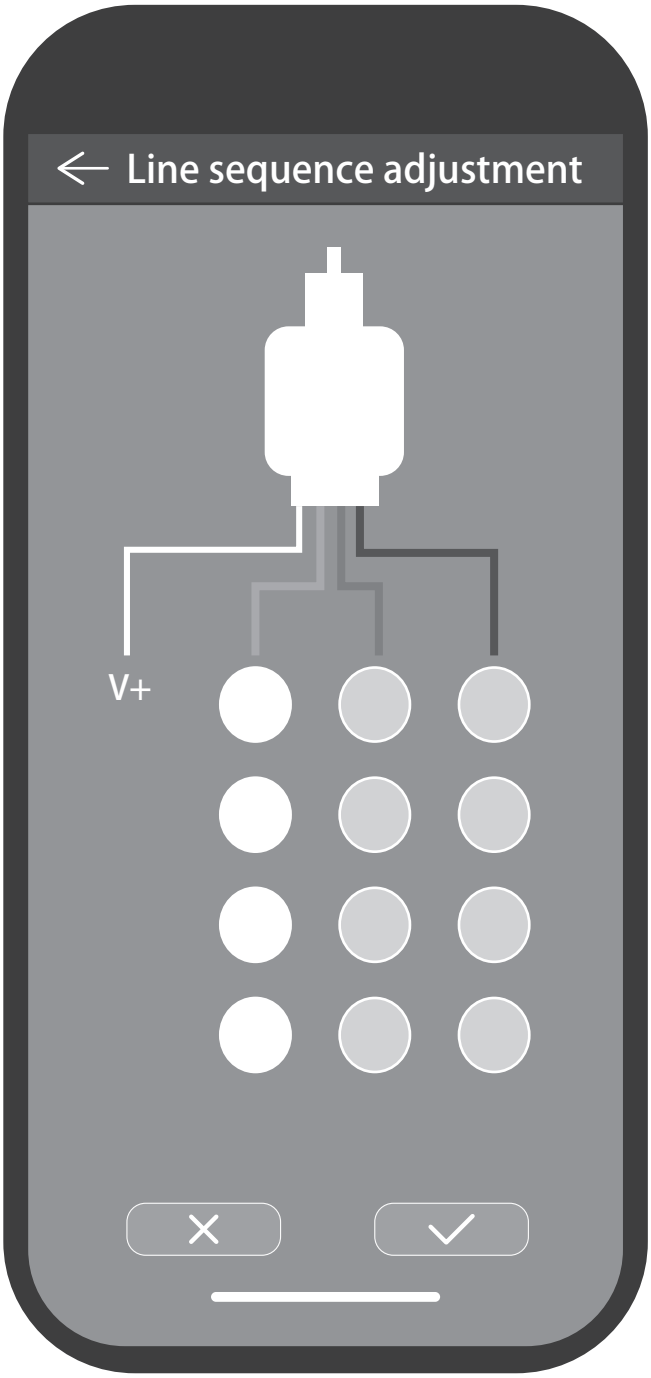

DESIGN IS IN THE DETAILS

Find **5** differences between the **2** images.



