Shower Door Instruction Manual

Installation guide video

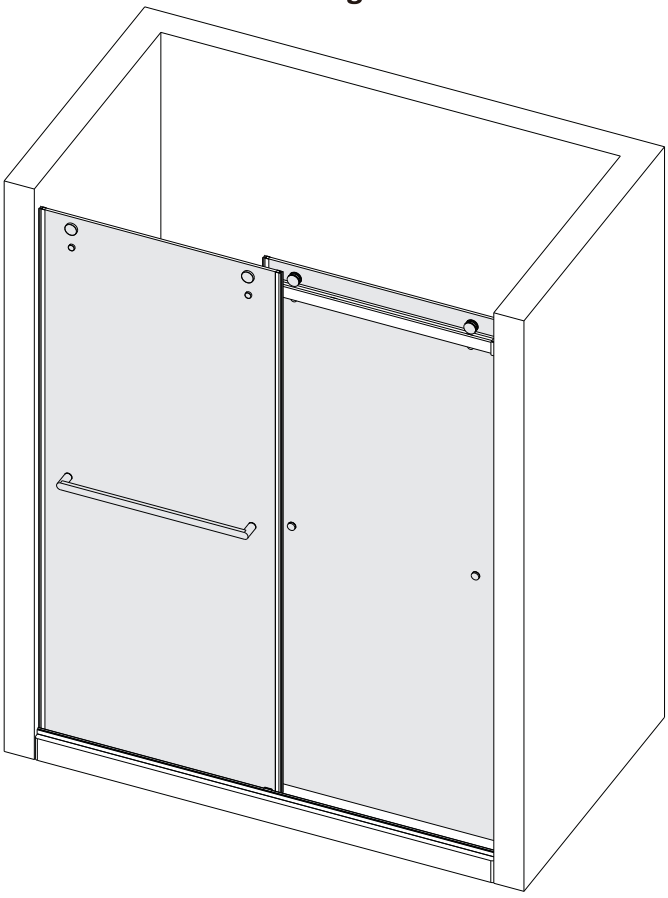

TEL: **(800)209.3199** *(MON-FRI 9:00am-5:00pm Eastern Time)*
Email:help@EverythingSupport.com

Parts Listing

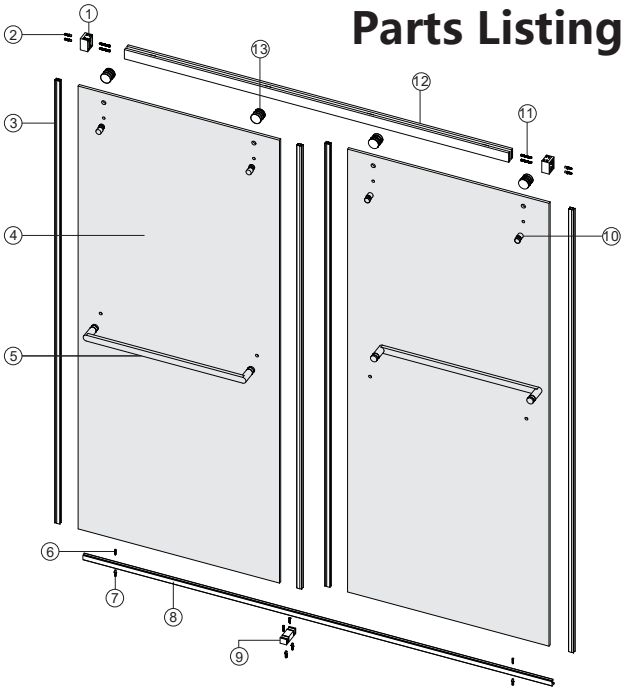

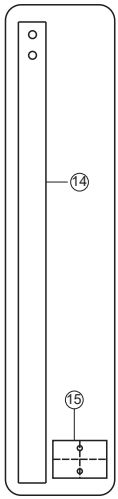

Installation of fixtures - positioners



No.	Name	Parts	Quantity
⑴	Wall Bracket	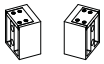	2PCS
⑵	8mmWall Plug		4PCS
⑶	Seal		4PCS
⑷	Tempered glass		2PCS
⑸	Handle		2PCS
⑹	Screw ST4x25		4PCS
⑺	6mmWall Plug		4PCS
⑻	Anti-Splash Threshold	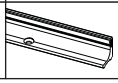	1PC

No.	Name	Parts	Quantity
⑼	Guide Block		1PC
⑽	Anti-jumping knob		4PCS
⑾	Screw ST5x40		4PCS
⑿	Rail	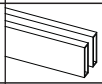	1PC
⒀	Roller		4PCS
⒁	Mounting Template for Wall		1PC
⒂	Mounting Template for Floor		1PC
⒃	Allen Key	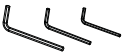	3PCS
⒄	⑴ Hole Plugs		4PCS

Tools Required

(Please bring your own tools)

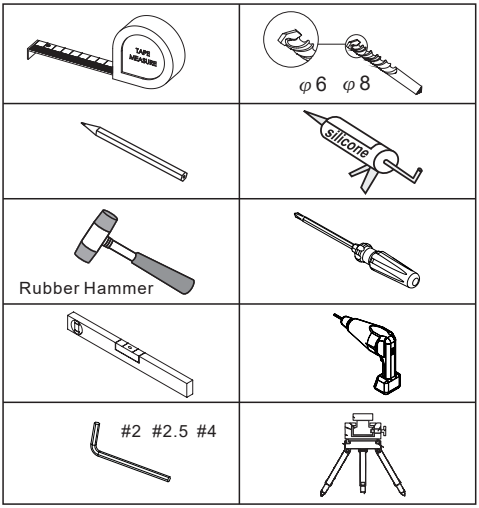



STEP 1

Before installation, please measure with a level to ensure that the installation space is level and vertical.

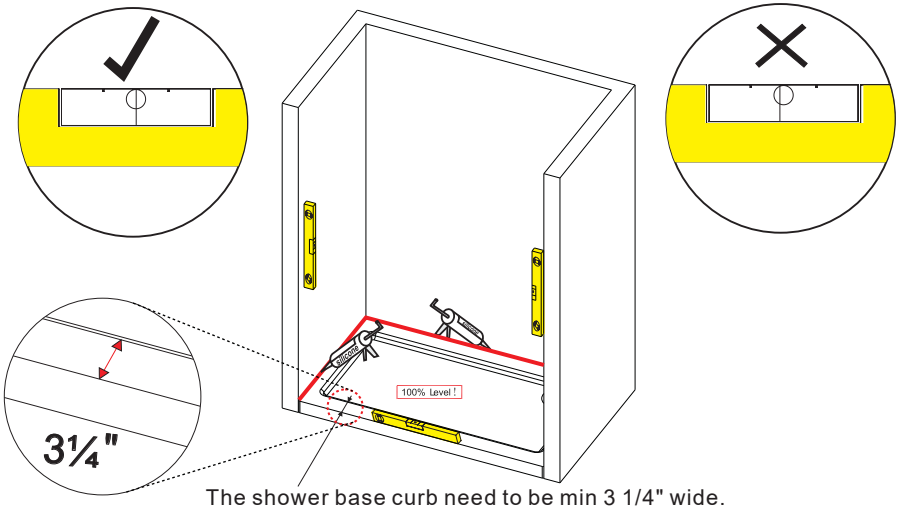

STEP 2

Note: Make sure (15) is centered horizontally.

Required Tools			
	⑥		2PCS
	⑦		2PCS
	⑨		1PC
	⑮		1PC

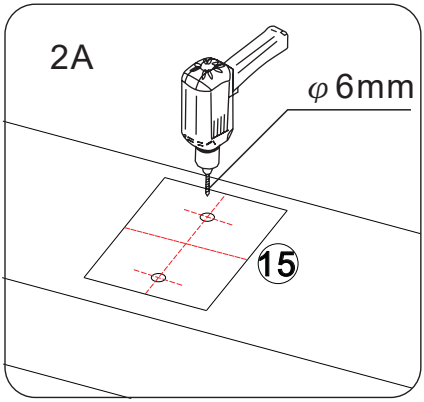

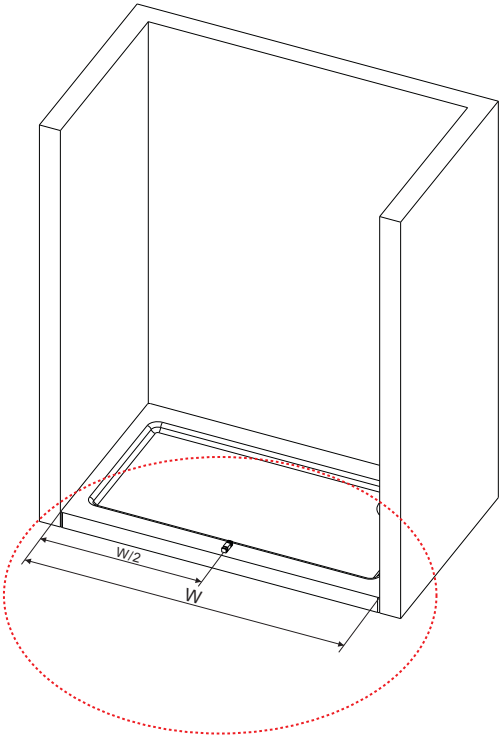

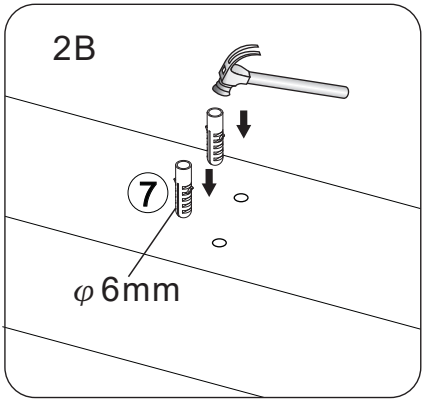

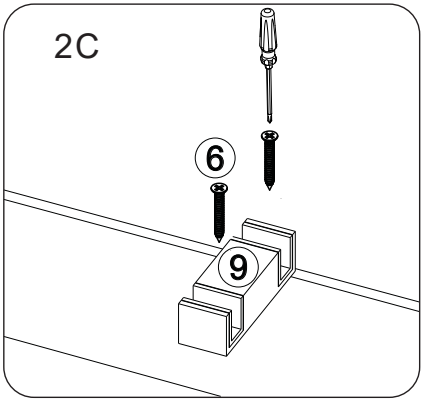

STEP 3

Note: Using a laser level, make sure the centerline of the laser path (15) and the center point of the (14) hole.

Required Tools			
	01		2PCS
	02	φ8mm	4PCS
	11	ST5X40	4PCS
	12		1PC
	14		1PC
	16		3PCS
	17		4PCS

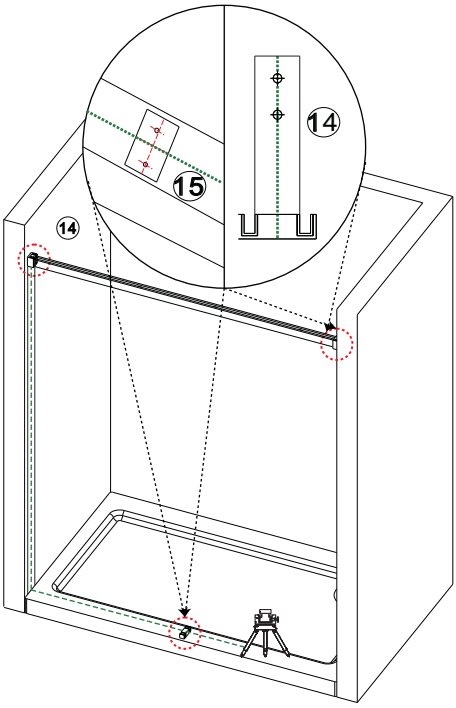

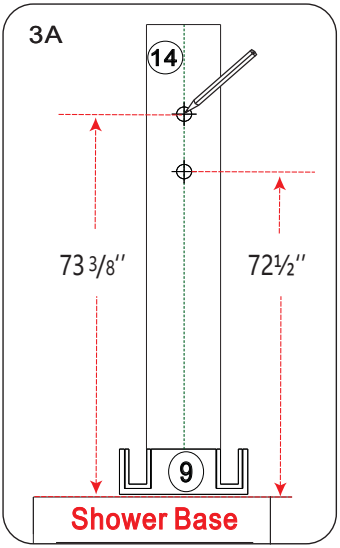

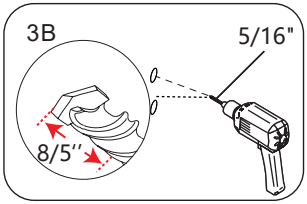

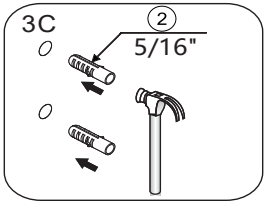

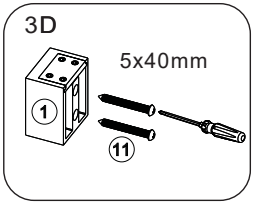

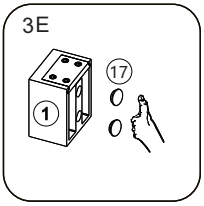

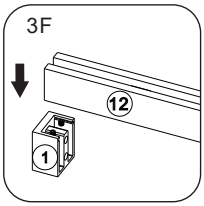

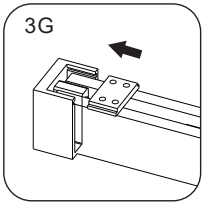

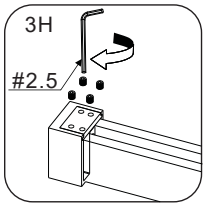

STEP 4

Note: Glass corner guards can be removed after installation is complete.
Pay attention to the front and back side of the glass when installing.

Required Tools								
⑭		2PCS	⑬		4PCS	⑯	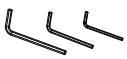	3PCS

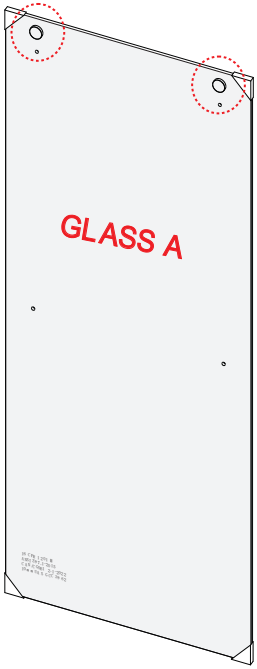

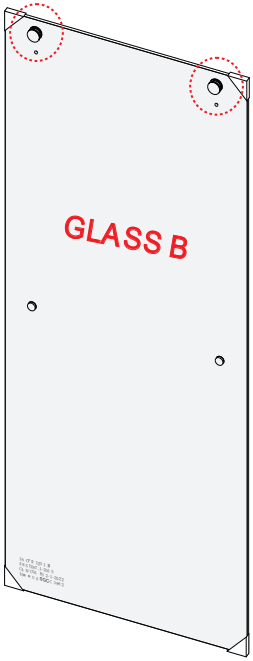

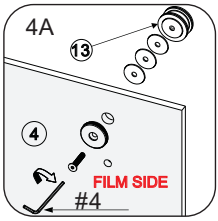

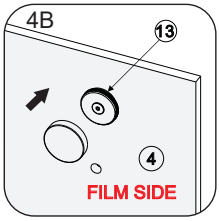

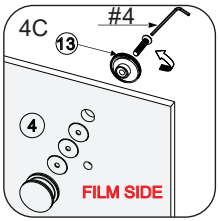

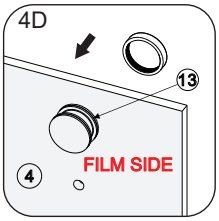

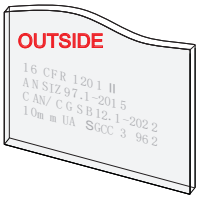



STEP 5

Note: It is recommended to install the inside shower door first.

Required Tools			
	⑭		2PCS
	⑨		1PC
	⑫	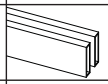	1PC
	⑬		4PCS

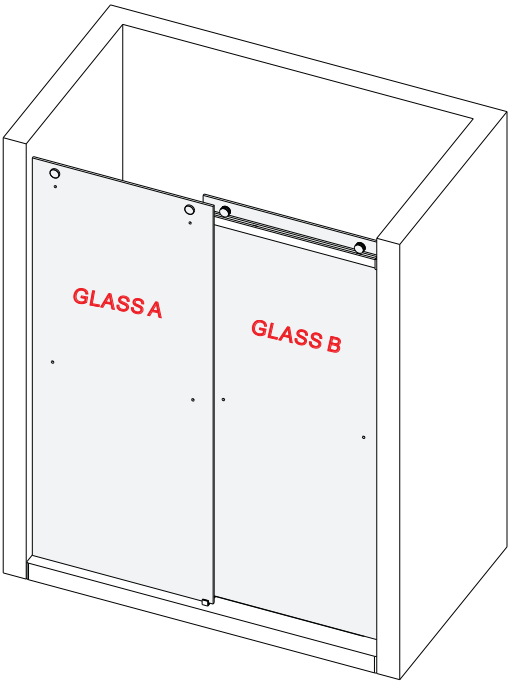

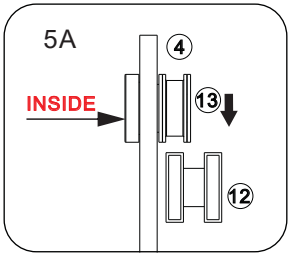

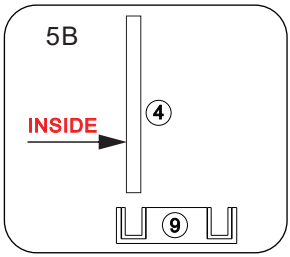

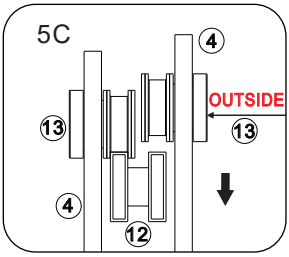

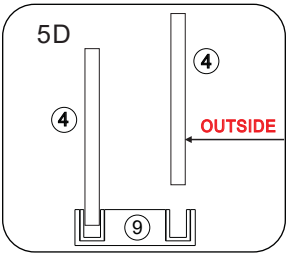

STEP 6

Required Tools	⑩		4PCS	⑤		2PCS

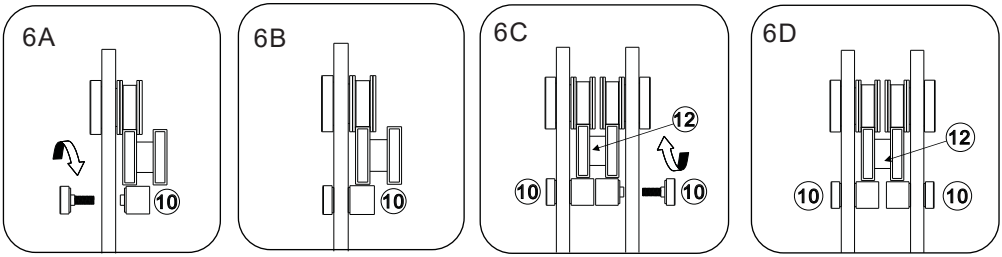

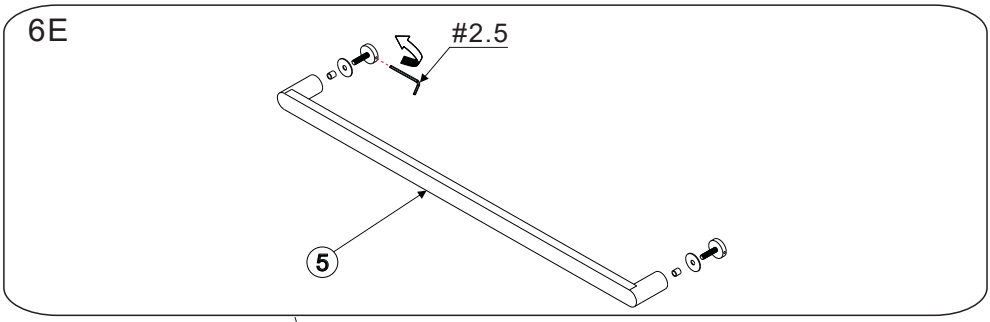

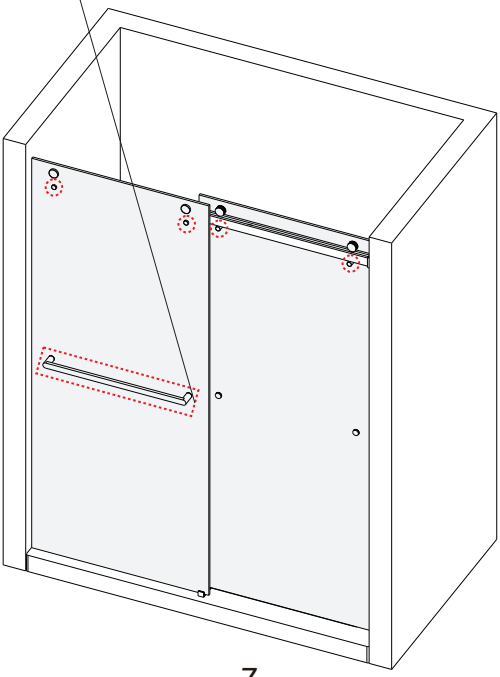

STEP 7

Tip: Tap (3) firmly with your palm from top to bottom to get it firmly set on (4).

Required Tools					
⑧	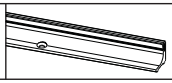	1PC	⑬		4PCS

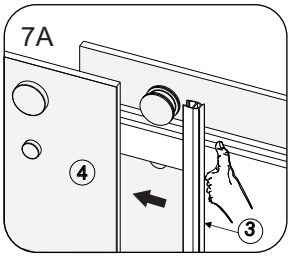

WARNING!

Make sure to have a distance (W) from the left side tile to the right side tile:

W Max:1524mm(60")

If W < 1524 (60") you can cut the support bar to adequate size. Only cut the side with no holes!

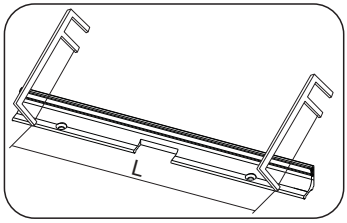

L=W

Cut equally from each end

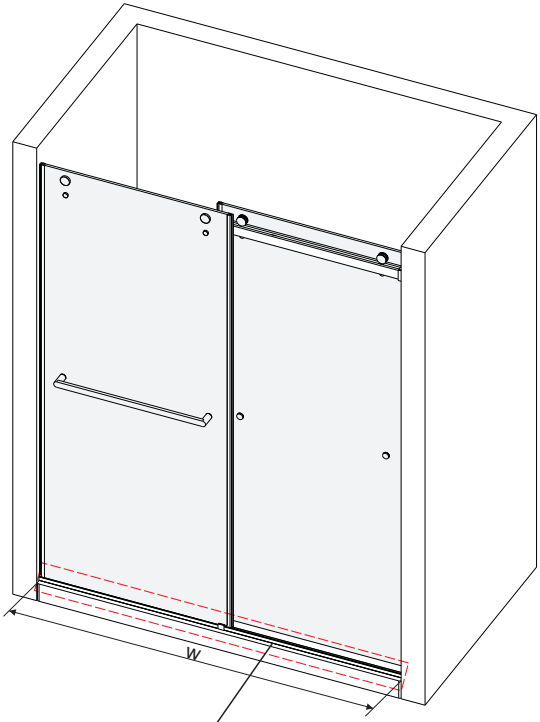

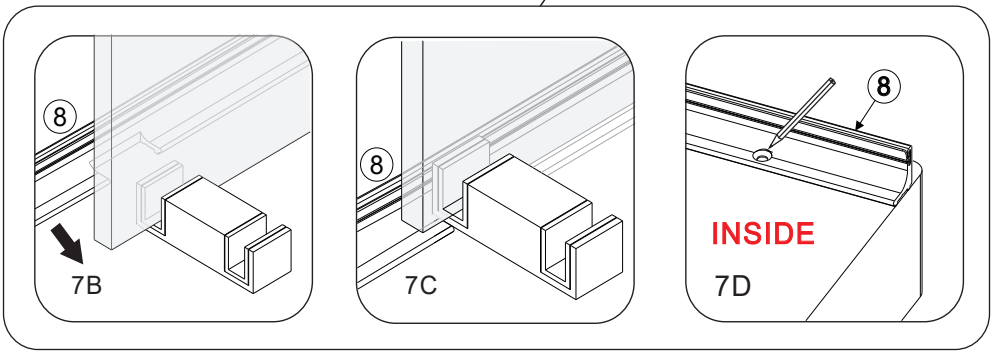

Required Tools								
⑥	ST4X25	2PCS	⑦	φ6mm	2PCS	⑧		1PC

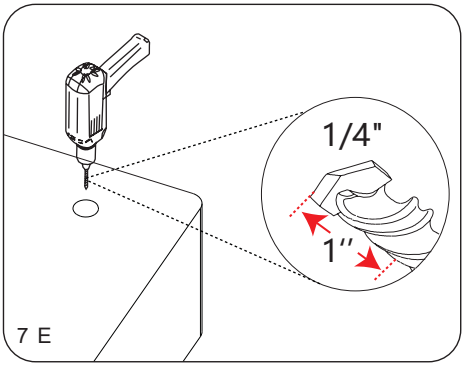

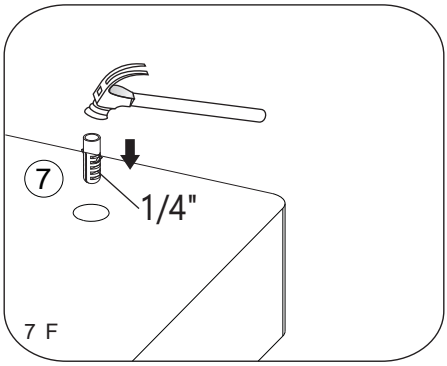

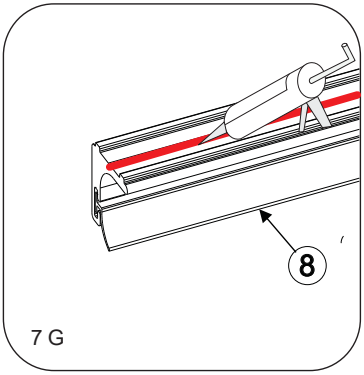

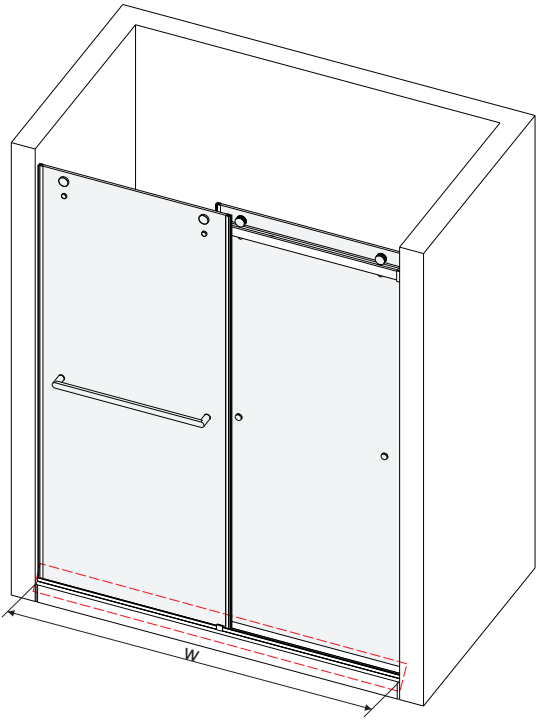

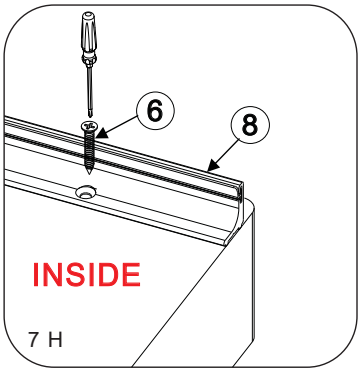

STEP 8

Turn (13) clockwise and the shower door rises; turn (13) counterclockwise and the shower door falls.

Required Tools					
⑬		4PCS	⑯	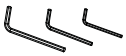	3PCS

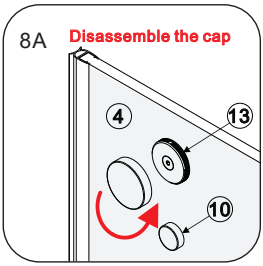

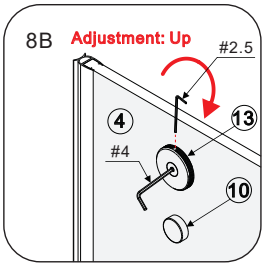

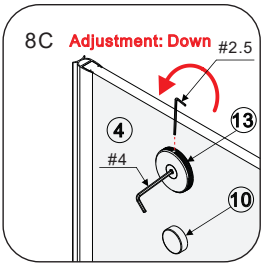

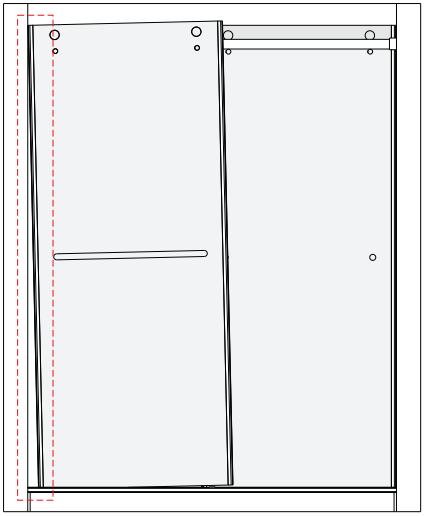

The problem arises on both sides



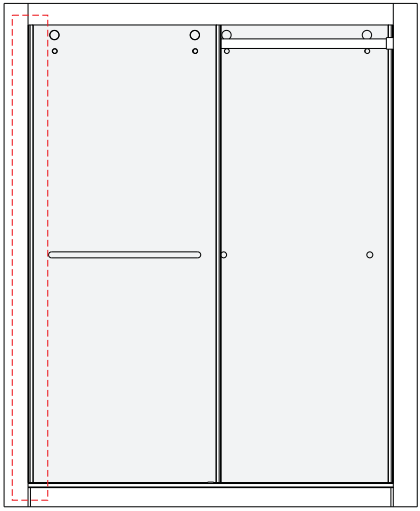

Normal state



STEP 9

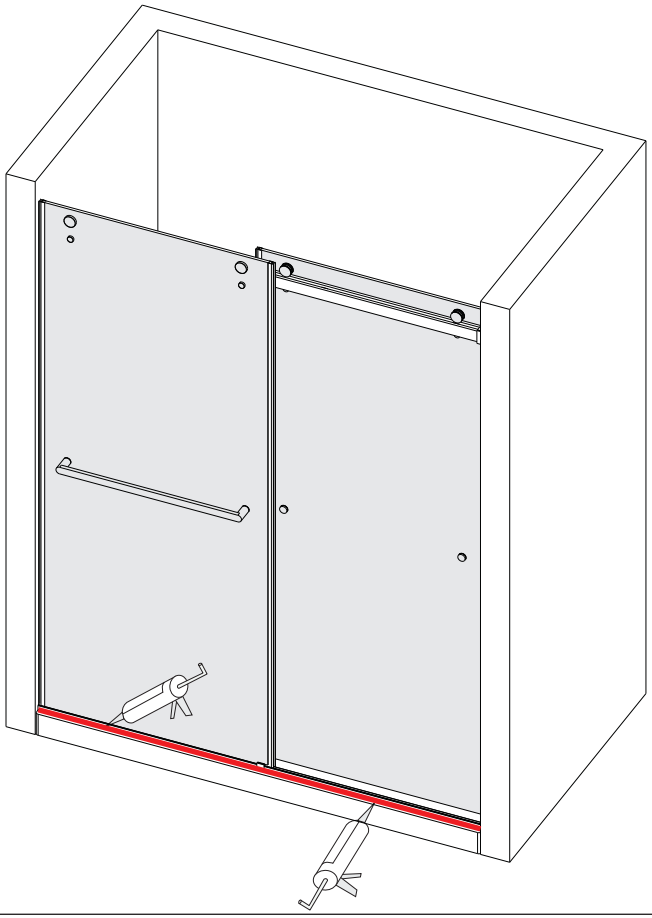

Note: 24 hours before use.

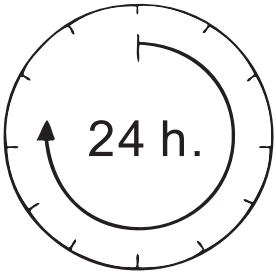

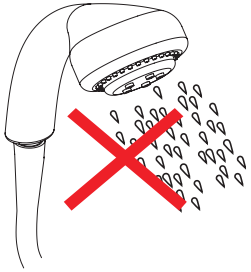

AFTER-SALES SERVICE CARD

We sincerely thank you for trusting our service and our products, and may this product add enrichment to your home. We guarantee that the product has undergone strict quality inspection and meticulous packaging. If you encounter any issue regarding either shipping or the product, please feel free to contact us at any time. We'd be more than happy to serve you wholeheartedly.
Yours Sincerely

- Please avoid harsh, corrosive and abrasive cleaners.
- Keep dry and avoid damp environments.

Installation guide video

Customer Service:(800)209.3199(MON-FRI 9:00am-5:00pm Eastern Time) or contact help@EverythingSupport.com

Address: 3005 Breckinridge Blvd, Suite 200, Duluth, GA 30096

If you have any questions or concerns please feel free to contact us. We're committed to providing our customers with the quality service.