Parts:

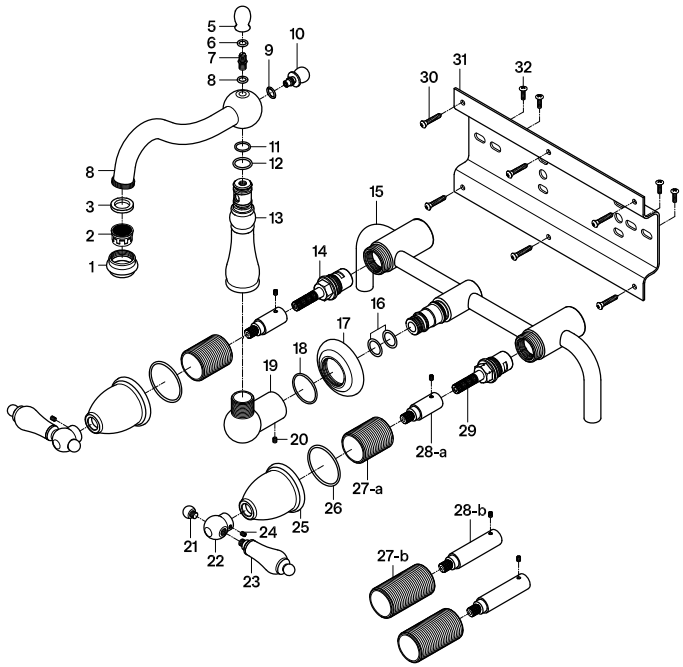

Replacement Parts:



Hot Cartridge:
KSRP3120HC



Cold Cartridge:
KSRP3120CC

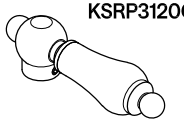

Handle: KBH1601PL

KINGSTON

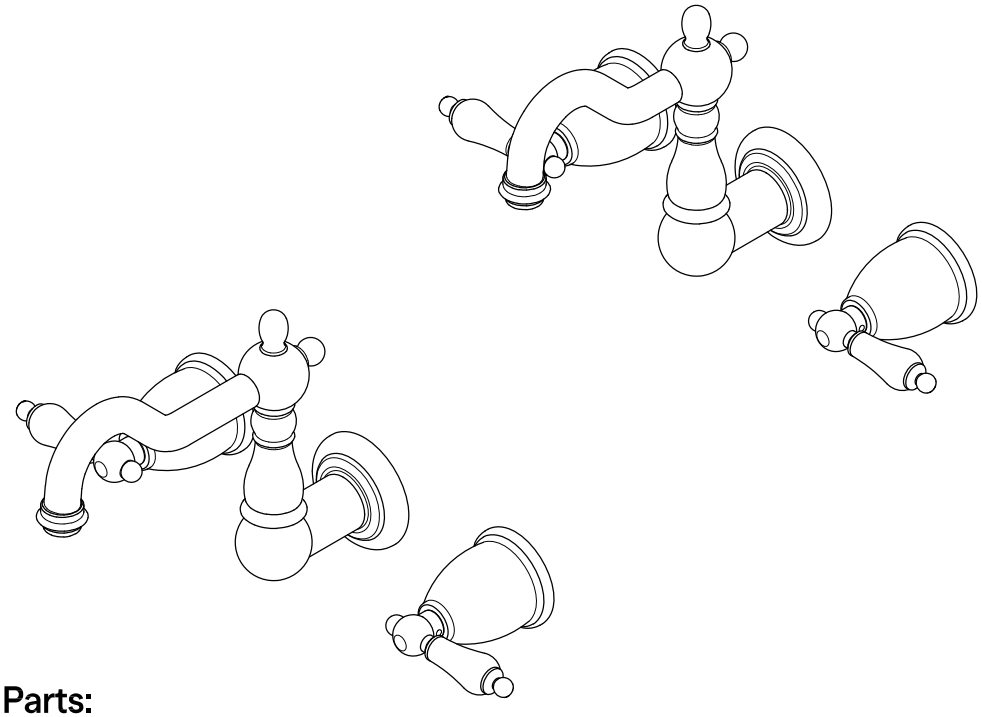

Parts:

Lock Screw	Mounting Screw	Mounting Plate	Long Brass Extension Adapter & Thread	Brass Extension Adapter & Thread
	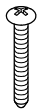	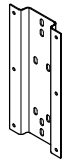		
4 Pcs	6 Pcs	1 Pc	2 Pcs	2 Pcs

www.kingstonbrass.com

TOLL-FREE CUSTOMER SERVICE: 1-877-2-KBRASS
TECHNICAL SUPPORT E-mail: service@kingstonbrass.com
12775 Reservoir Street, Chino, CA 91710

CARE AND MAINTENANCE OF YOUR FAUCET

Your KINGSTON faucet has been finished to the most strict standards; however, due to the high content of minerals in the water, your finish may appear dull and tarnished after time. These are some do's and don'ts to maintain the luster on your faucet for many years to come.

DO
1. Use a silicone based caulking when installing.
2. Clean your faucet with only a mild soap and water solution.
3. Dry your faucet after using it.
4. Give it a coat of Carnauba Wax periodically.

DON'T
1. Use plumbers putty when installing the faucet.
2. Use any abrasive cleaning agents.

It may seem like a very simple and short list but it is that simple to maintain your faucet, looking shiny and new.

If your faucet is already looking somewhat dull and tarnished, before replacing it, try cleaning it with a 50/50 solution of vinegar and water, you may need to soak some rags and wrap around those stubborn areas, leave
overnight and rinse completely in the morning, apply Carnauba wax once you have removed the mineral deposits.

NOTICE

Failure to follow all directions may cause leaks which may result in water damage

⚠CAUTION

Failure to follow all installation directions may cause product to detach from the wall and cause serious injury

KINGSTON

INSTALLATION INSTRUCTIONS
Twin Handles Wall Mount Faucet

BEFORE BEGINNING INSTALLATION:

1. Flush all lines prior to installation
2. Prepare location by securing 2 horizontal wood braces allowing for a 3" clearance in between the braces, the front surface of the braces should be placed at 2-1/4"~3-1/4" from the finished wall surface

Need Tools:

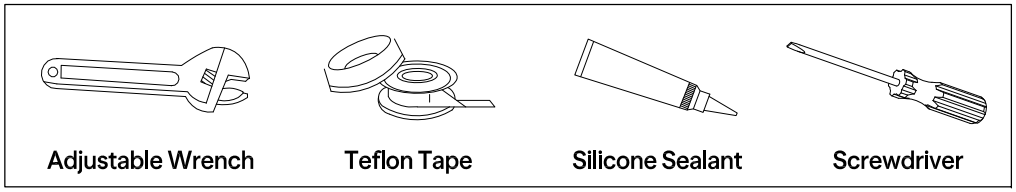

After wall has been finished:

1

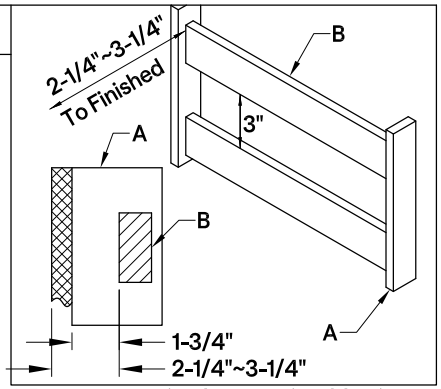

1. Prepare location by securing 2 horizontal wood braces allowing for a 3" clearance in between the braces, the front surface of the braces should be placed at 2-1/4"~3-1/4" from the finished wall surface.

2

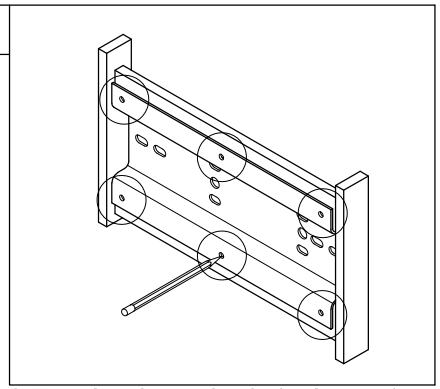

2. Place bracket at the desired mounting location and mark position of holes.

3

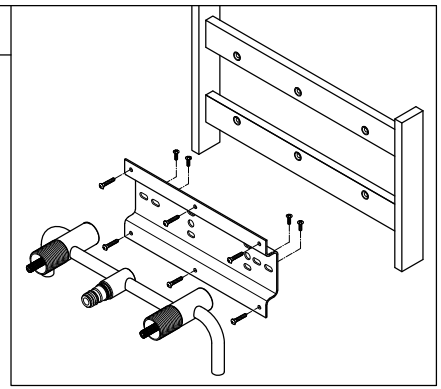

3. Secure valve assembly onto mounting plate with enclosed screws and secure plate to frame.

4

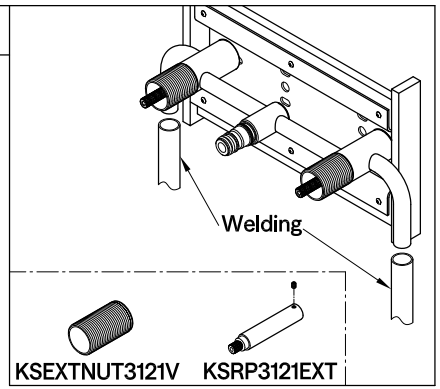

4. Weld both hot and cold water supply lines onto valve inlets. If your wall has a thickness of more than 1" you will need to replace the short stem extension and short threaded sleeve with KSRP3121EXT (long stem extension), KSEXTNUT3121V (long threaded sleeve) to accommodate the wall thickness.

5

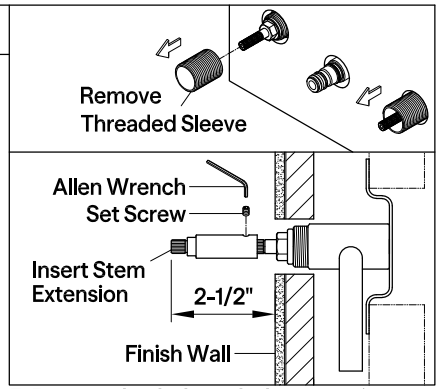

5. Remove both threaded sleeves, insert stem extension and make sure that the tip of the stem extension is approximately 2-1/2" from the finished wall surface, secure by tightening the set screw.

6

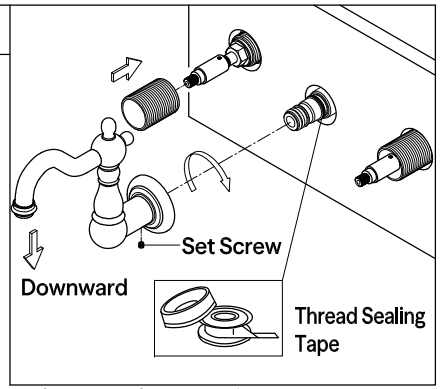

6. If needed for wall thickness more than 1" and insert both extended threaded sleeves, apply Teflon tape to the spout threads, make sure to thread the spout fully and then back thread until the spout is facing downward, secure with set screw at the back of the spout.

7

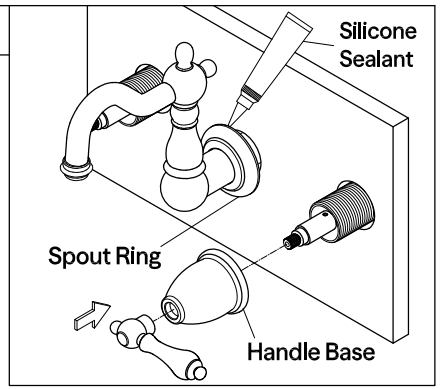

7. Thread handle bases and attach handles. Make sure handle operates freely without any resistance and in the desired direction, adjust as necessary, Apply a bead of silicon based caulking to the perimeter of the spout ring and slide back to the wall, clean any excess caulking.

8

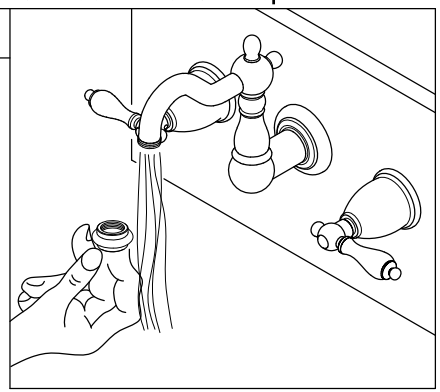

8. Remove the aerator, turn on the faucet, let water run for at least one minute, this will clear any debris left in the line, reinstall aerator.

©2025 LVC Kingston LLC. All Rights Reserved.
2026-07-TG