HAPPINESS
INSTALLATION

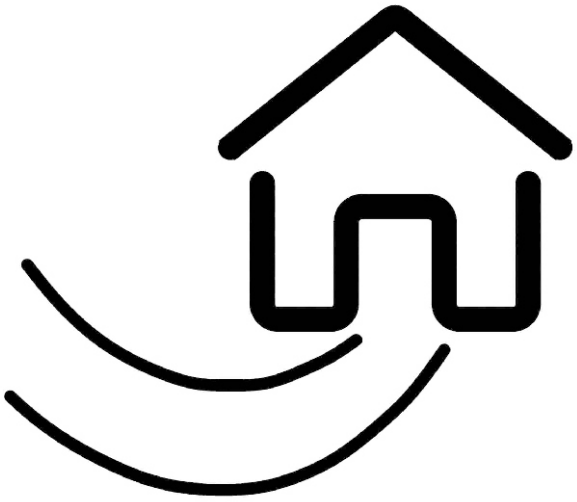

CAUTION

Parts are placed at the bottom of the product

- If you have any questions with the product, please contact us by:
- **Email: customerservice@zoy-living.com**
  (we will reply to you within 24 hours)

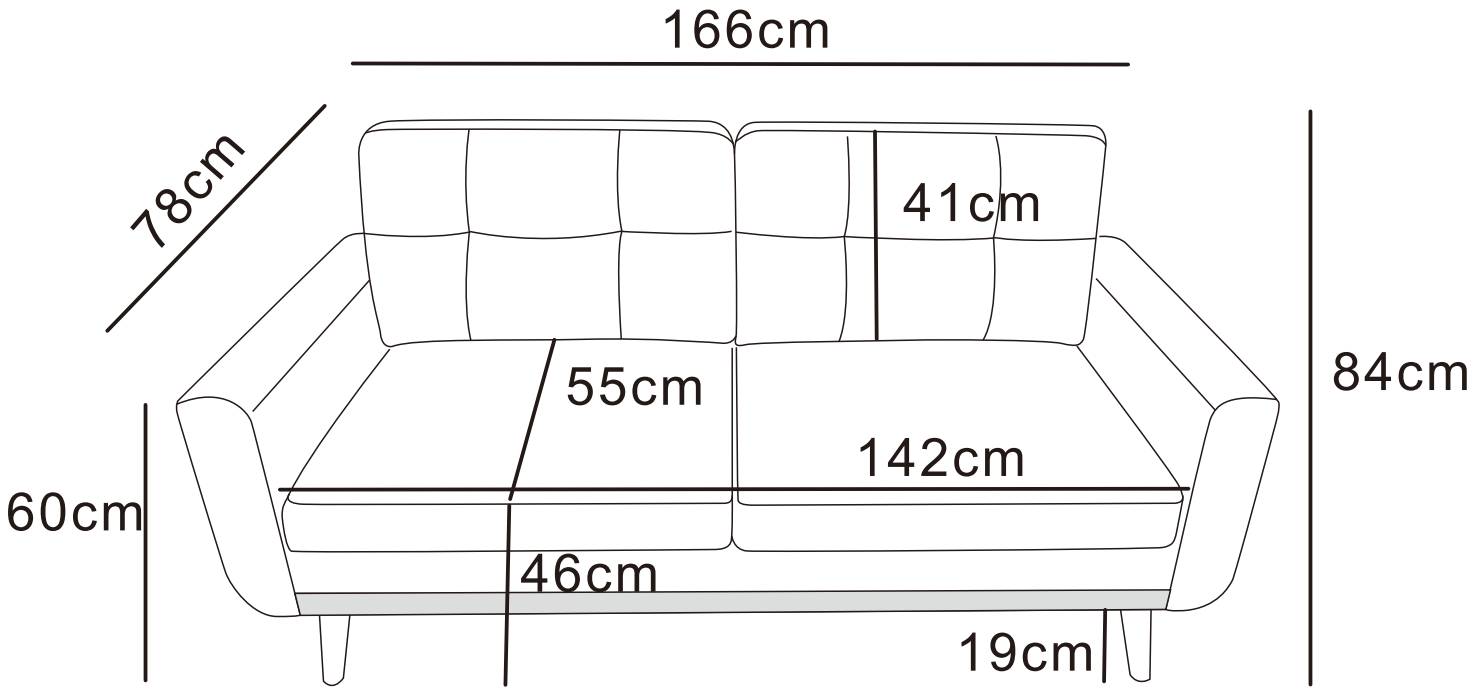
166cm
78cm
41cm
84cm
55cm
142cm
60cm
46cm
19cm

Assembly Instructions

004Q

Your sofa comes packaged in one box . Carefuly remove all of components from the packaging and set aside for assembly .

Package Contents

CAUTION:

DO NOT use any sharp objects to open plastic wrapped components as damage to product or components may result .

HARDWARE LIST

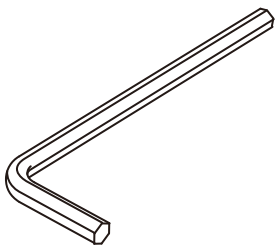	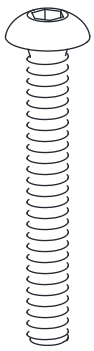	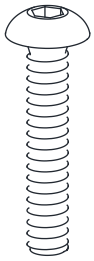	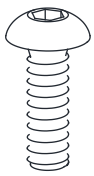	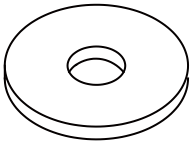
Ax1	Bx5 M6X45mm	Cx17 M6X30mm	Dx17 M6X16mm	Ex37

PART LIST

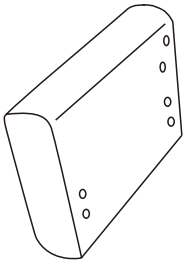

H:Left Arm x1 pc

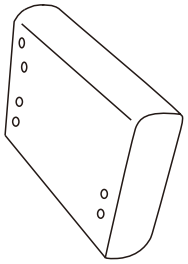

I:Right Arm x1pc

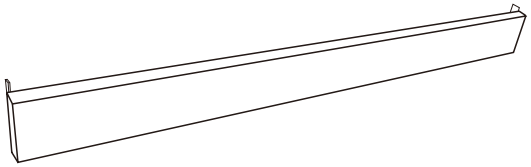

J:Back Board x1pc

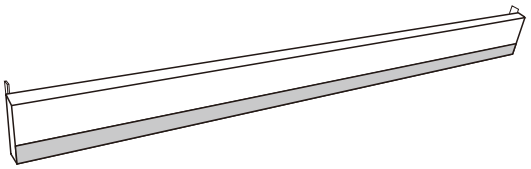

K:Front Board x1pc

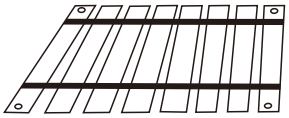

L:Mattress x2pcs

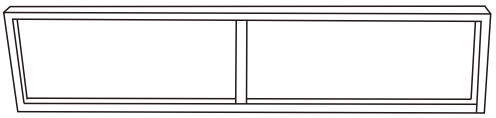

M:Back Frame x1pc

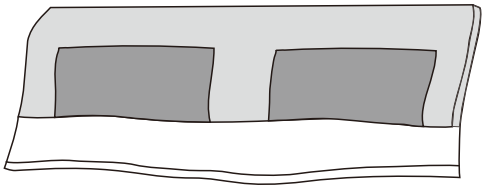

N:Back Cover x1pc

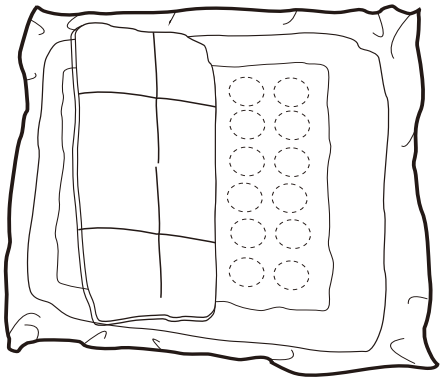

O:Back Cushion x2pcs

P:Seat Cushion x2pcs

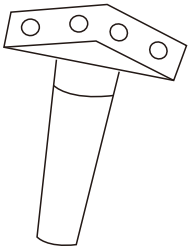

Q:Leg x4pcs

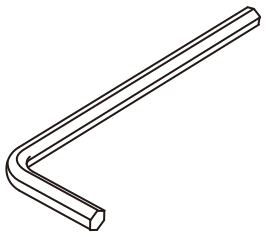

Ax1



Cx8

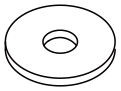

Ex8

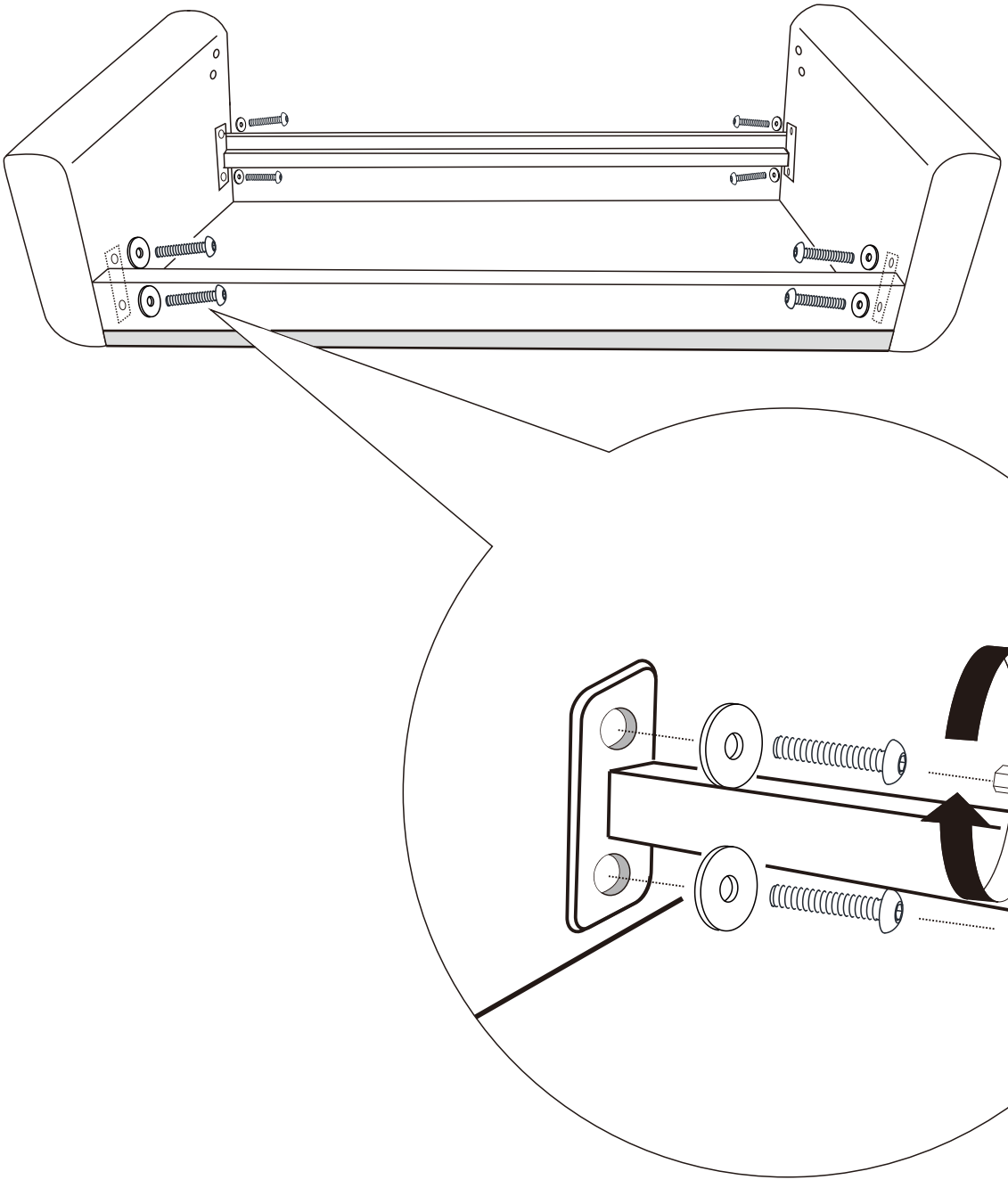

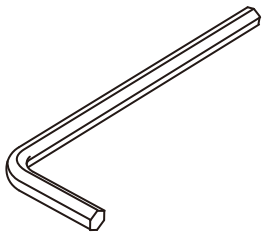

Ax1

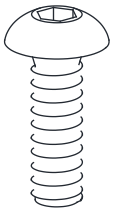

Dx16

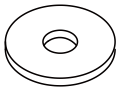

Ex16

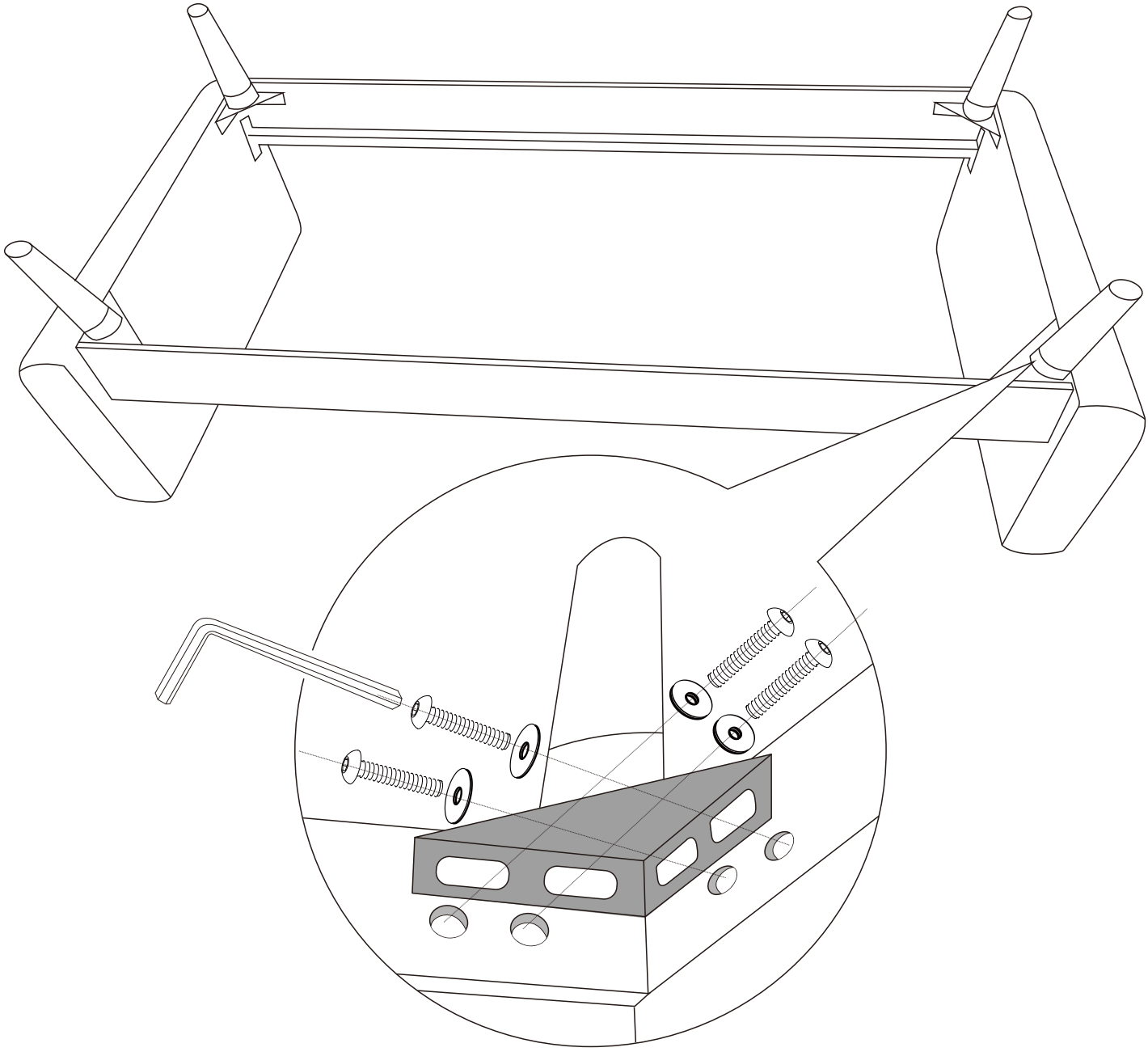

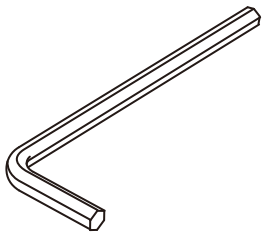

Ax1



Cx8

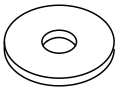

Ex8

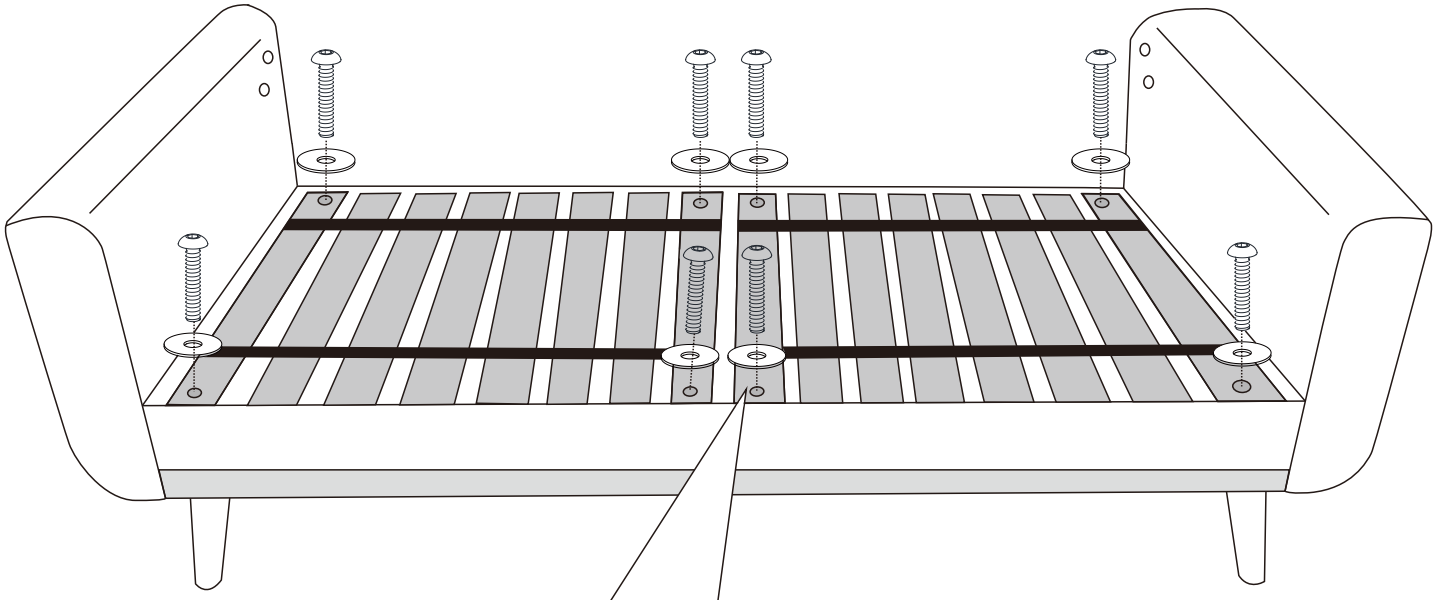

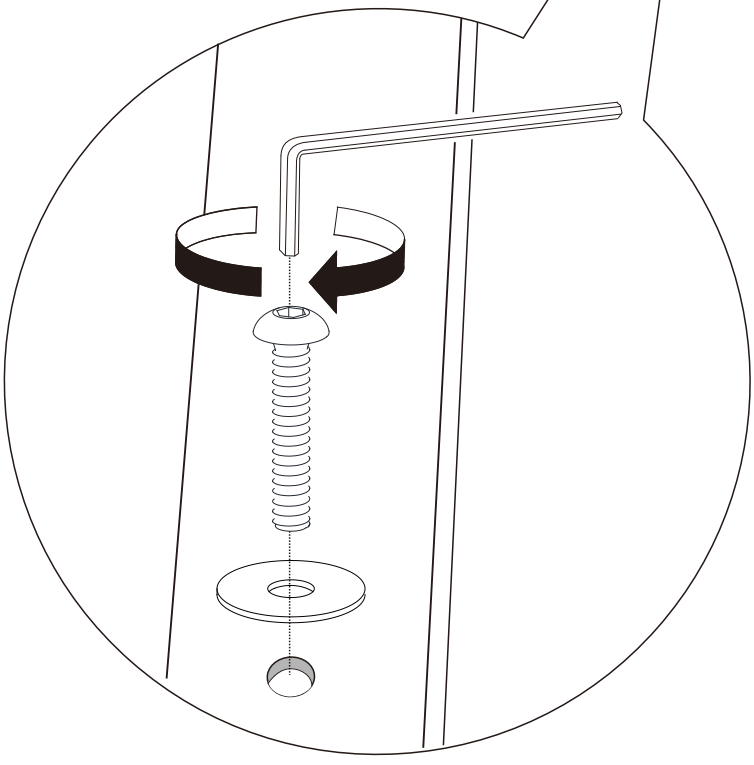

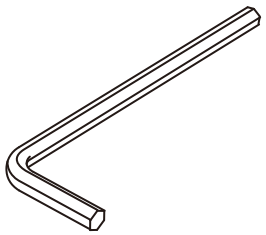

Ax1

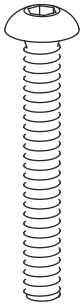

Bx4

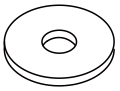

Ex4

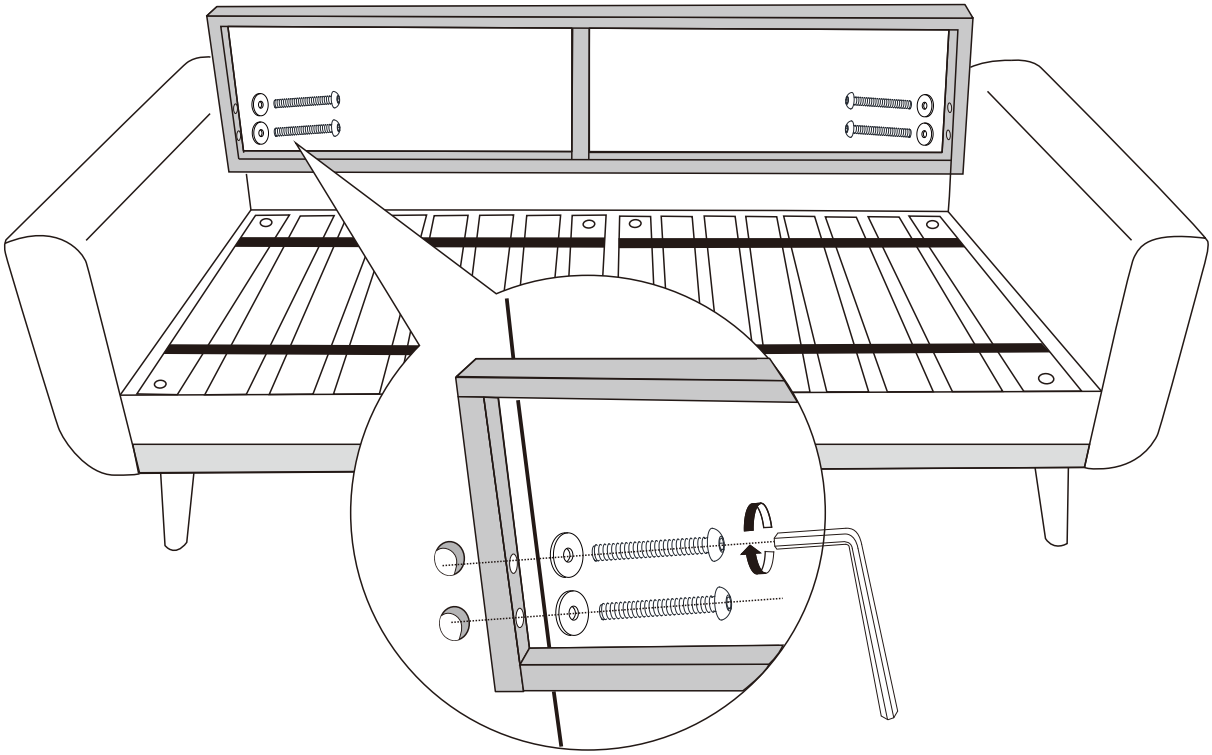

Put the Back Cover on the back frame

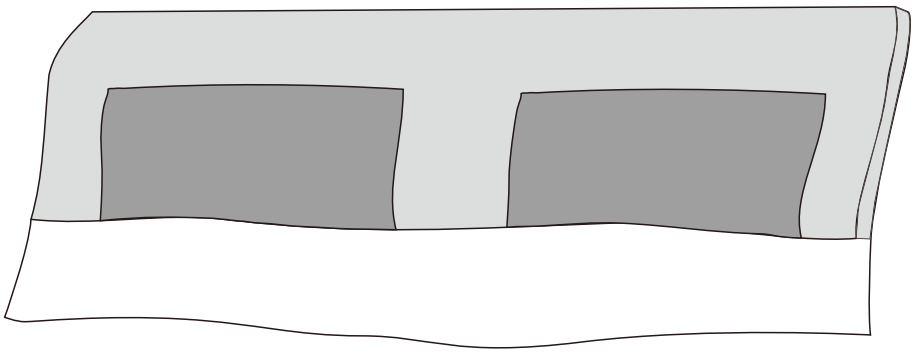

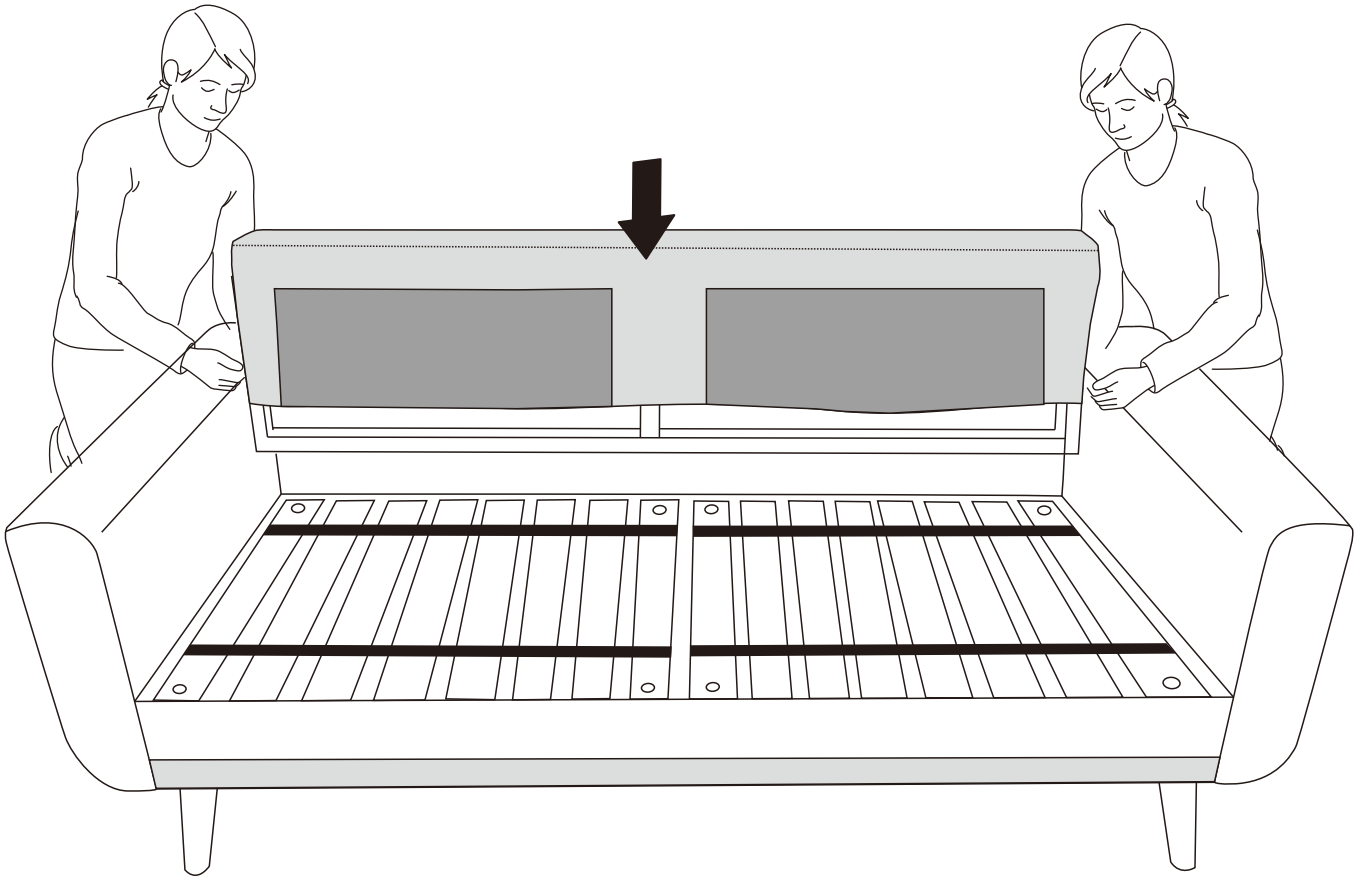

Tips:

1. Due to package compression for better shipment, the fabric may have wrinkles.
2. Please take all packages out and pat every part to make it rebound better and fluffy, so that it can restore to picture-like status.
3. Please keep children away from the plastic bags.

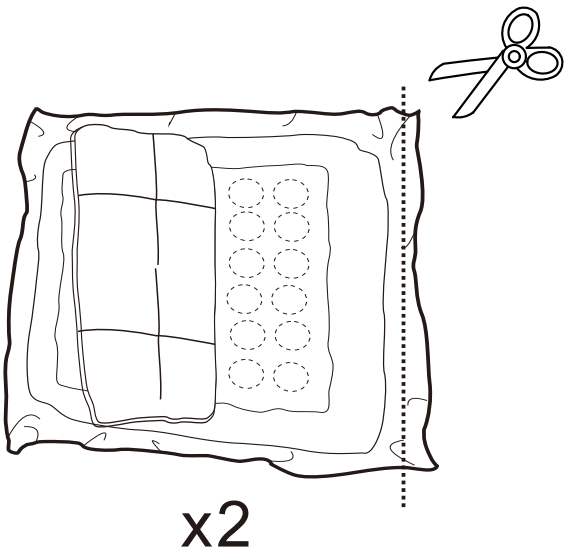

x2

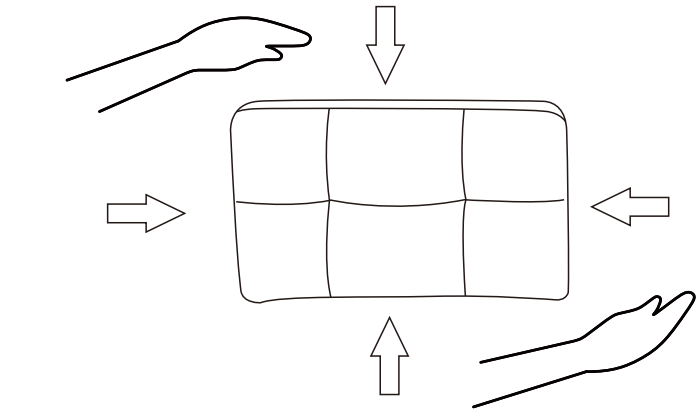

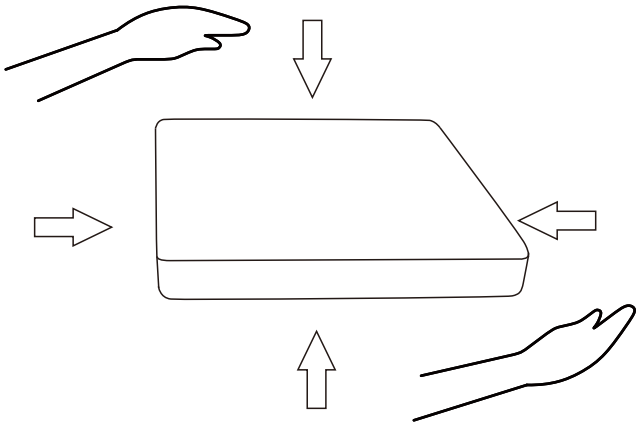

1.Repeatedly tap the sides and front and back to make it rebound better and fluffy.

2.Knead your cushion like giving your cushion a massage while allowing the air to flow through the foam.

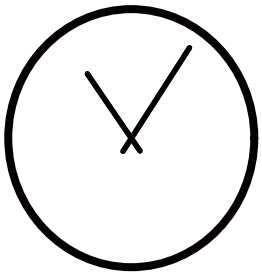

48-72h

It might takes up to 48-72 hours.

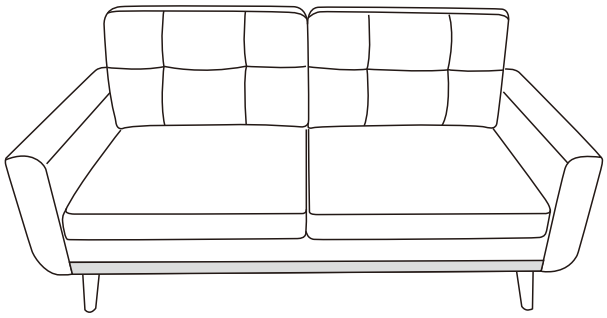

Warnings

1. Please check if the components of the chair are all included and can be used normally.
2. Assemble all components according to the instruction correctly.
3. If the chair is damaged or doesn't match the website description, please send clear pictures of the product and label of the carton to our service team for further help.

If the chair still doesn't assembly, please feed the information back to our customer service in time and we'll help you solve the matter as soon as possible

4. If you have any questions with the product, please contact us by:

Email: **customerservice@zoy-living.com**(we will reply to you within 24 hours)