wall light

User's Manual

Dear user, thanks for purchased this products. Please read the manual carefully before use.

Note:
1. Please must follow the installation guide
2. Do not arbitrarily retrofit lamps and replace parts by yourself

- 1.Do not use the power more than the specified range (rated voltage 110v)
- 2.Prolonged used above the rated vollage range may cause damage to the lamp, do not install in high temperature or overtime, to avoid causing damage.
- 3.In order to ensure safety, maintenance, and inspection of lamps and lanterns, please entrust electricians to check, the construction of non-professionals is prone to danger.
- 4.If an abnormal phenomenon occurs in the lamp, please cuf off the power immediately and contact us.

Name and installation method
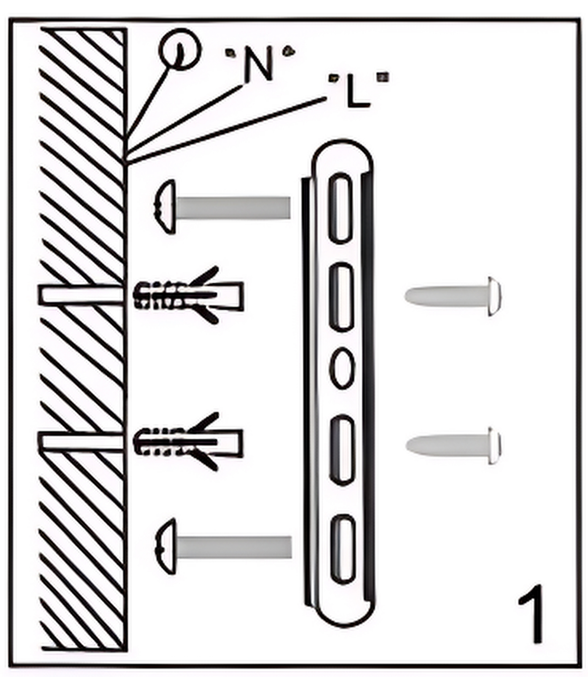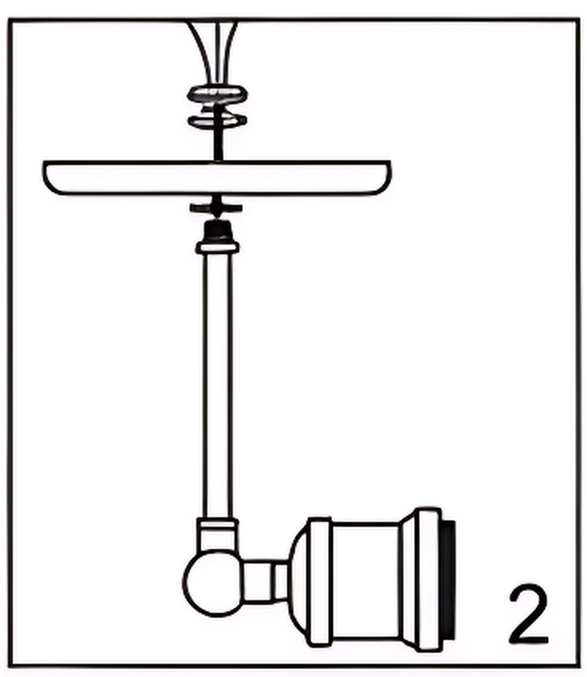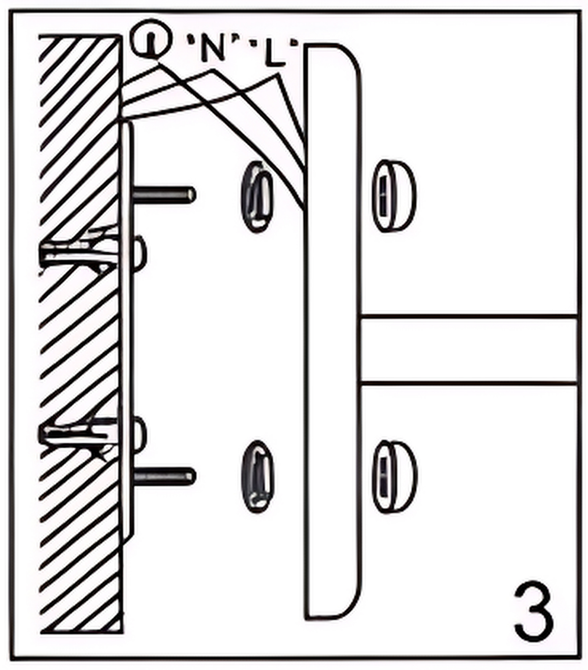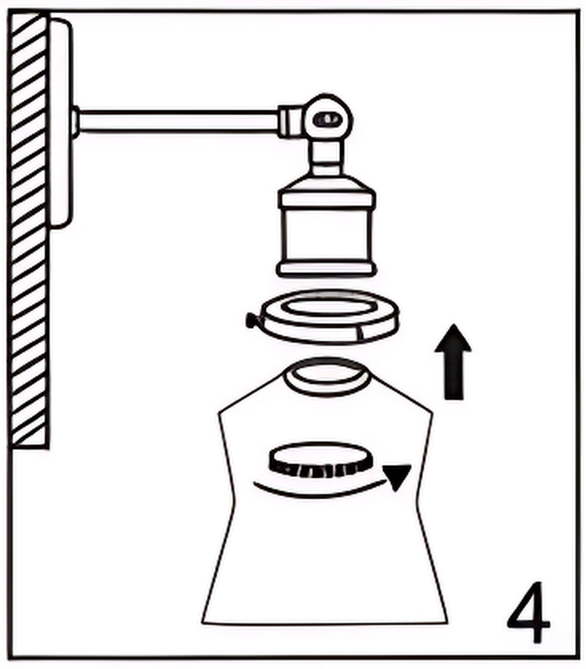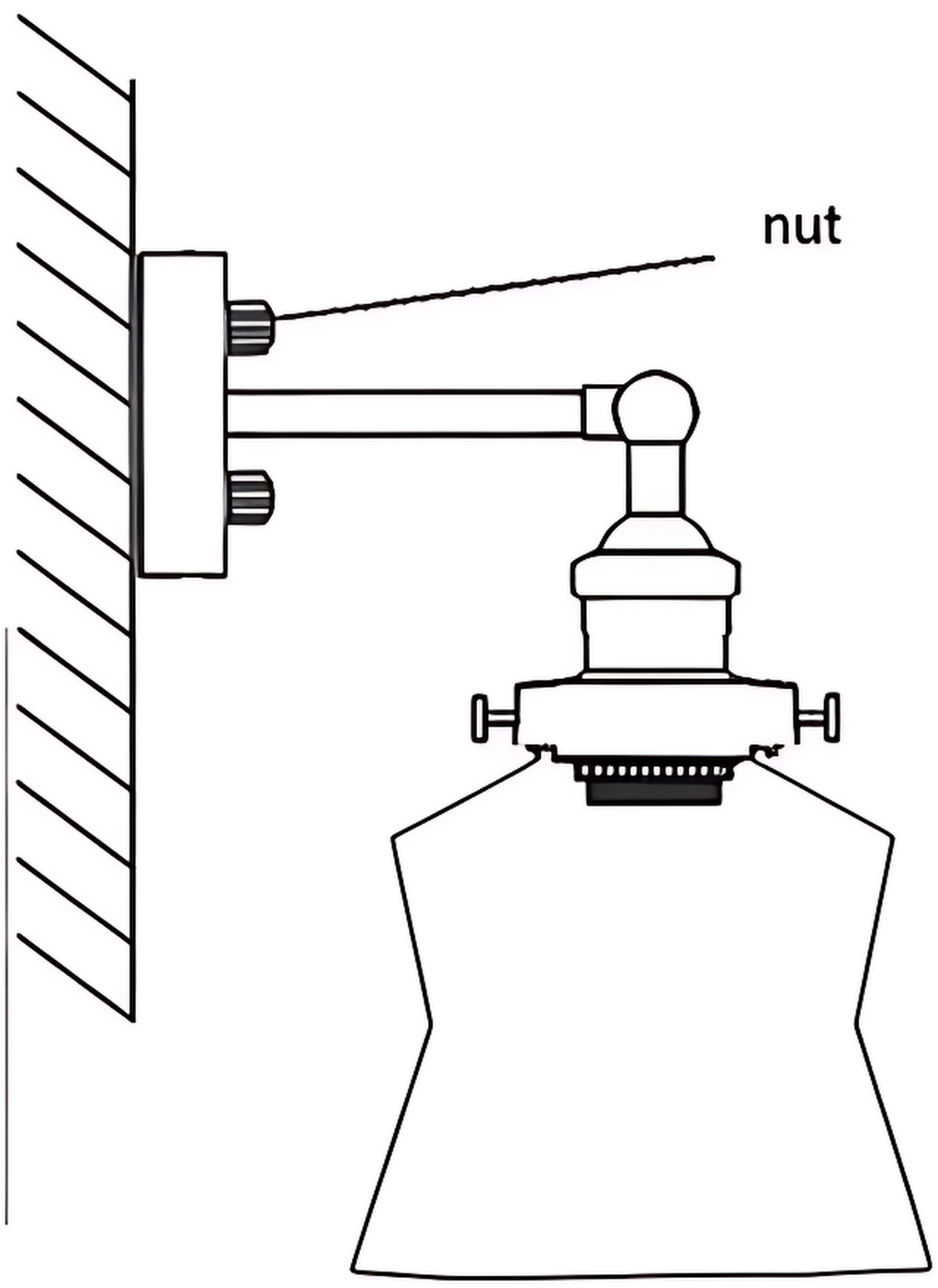
Power must be cut off before installation,to avoid risk of electric shock