Assembly Manual
Ottoman

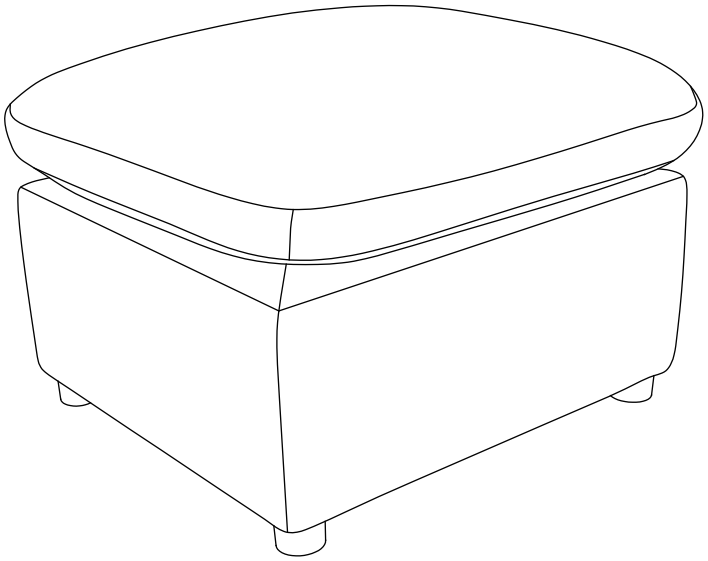

⚠ CAUTION

THIS ASSEMBLY MANUAL CONTAINS IMPORTANT SAFETY INFORMATION.
PLEASE READ AND KEEP FOR FUTURE REFERENCE.

A x 1 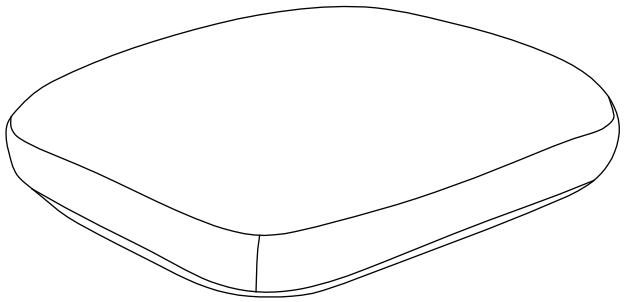 Seat Cushion	B x 1 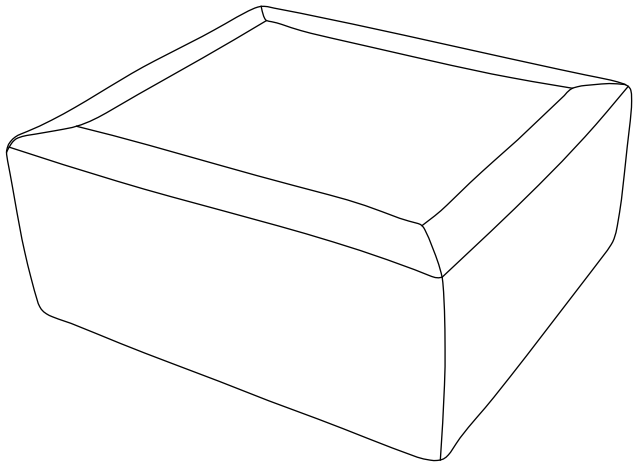 Seat Base
H1 x 4 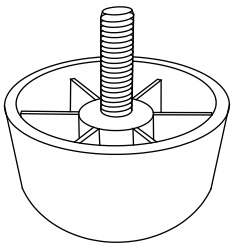 Plastic Leg	H2 x 4 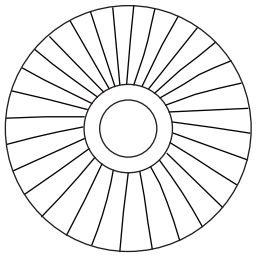 Plastic Washer

Please read through the instructions below to familiarize yourself with the parts and steps before assembly.

ASSEMBLY INSTRUCTIONS

1 Open the carton package and remove all the parts , open the Seat Base bottom zipper, take out the hardware from the accessory bag . Make sure all the parts match the list provided above as shown.

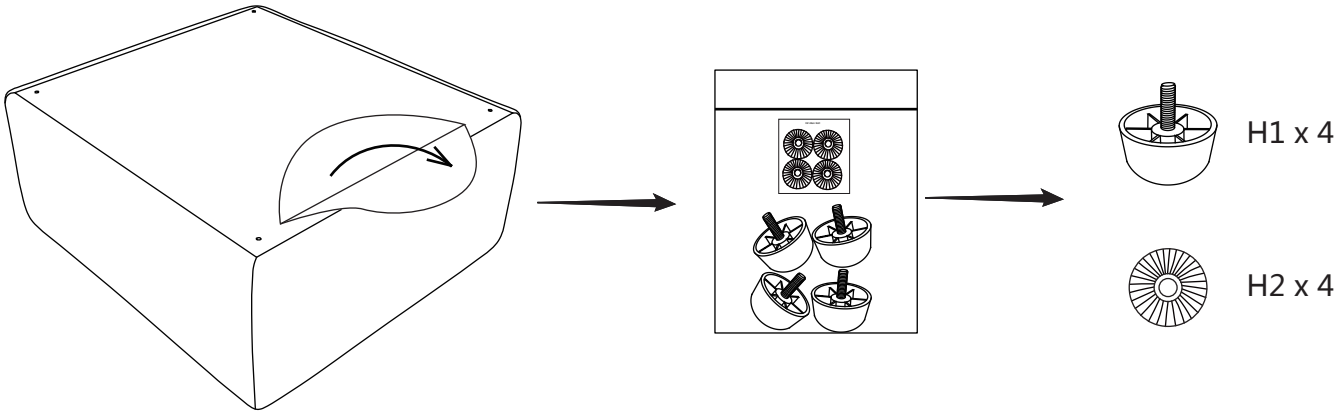

2 Open the vacuum-packed bag containing the Seat Cushion (A).
Note: DO NOT use sharp tools such as knives or scissors to open the bag as it could potentially damage the cushion. Please use your hands to gently pull the bag apart.

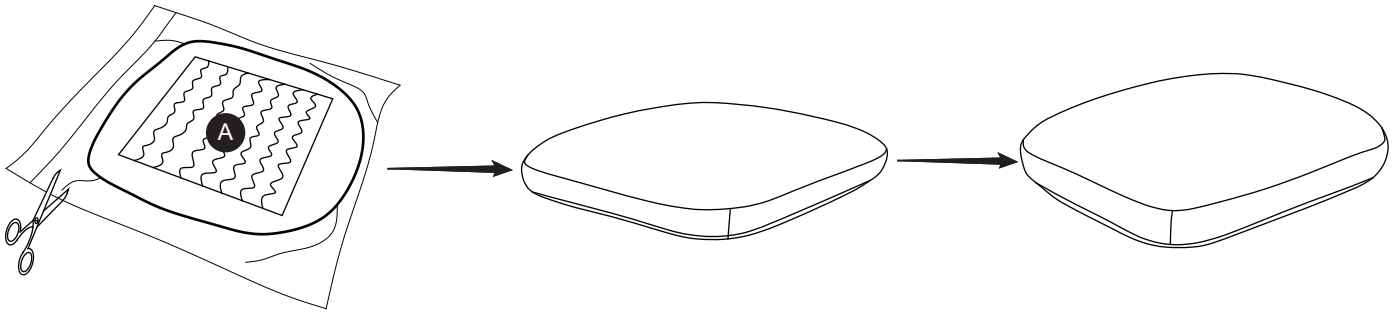

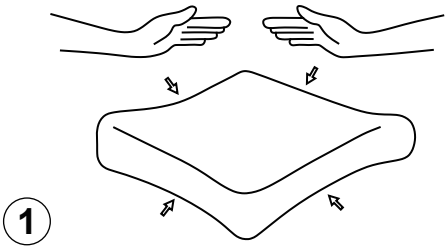

As a result of package compression during shipping, the fabric may have wrinkles, which will gradually disappear over time.

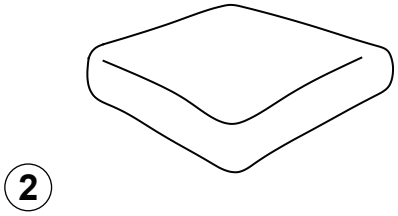

Please be patient and wait for the cushions to return to their normal fluffy state, which may take 48 to 72 hours.

wait for 48 to 72 hours.

3 Place the Plastic Washer (H2) on the bolt of each Plastic Leg (H1) and firmly rotate the legs.

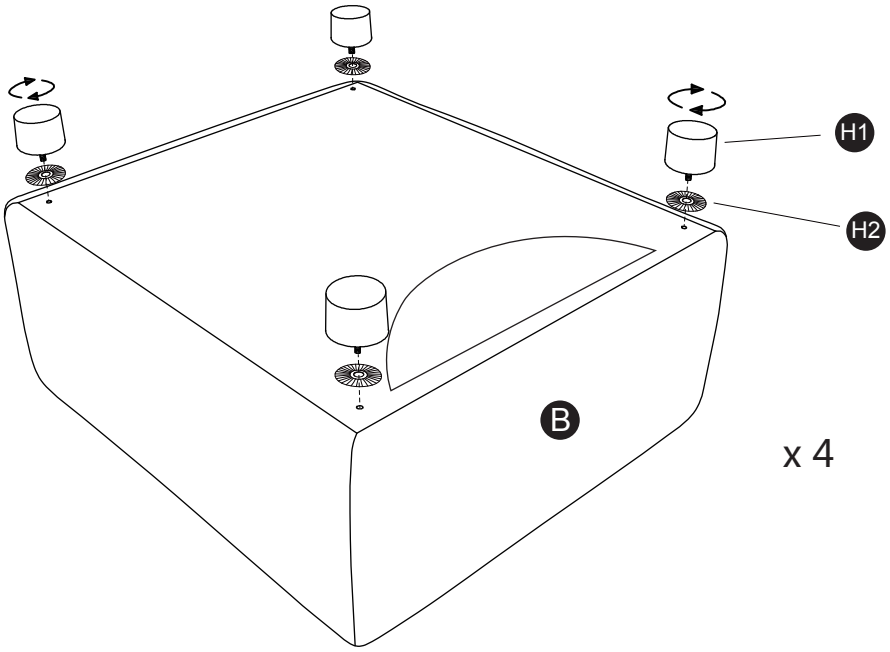

4 Attach the Seat Cushion (A) onto the Seat Base (B).

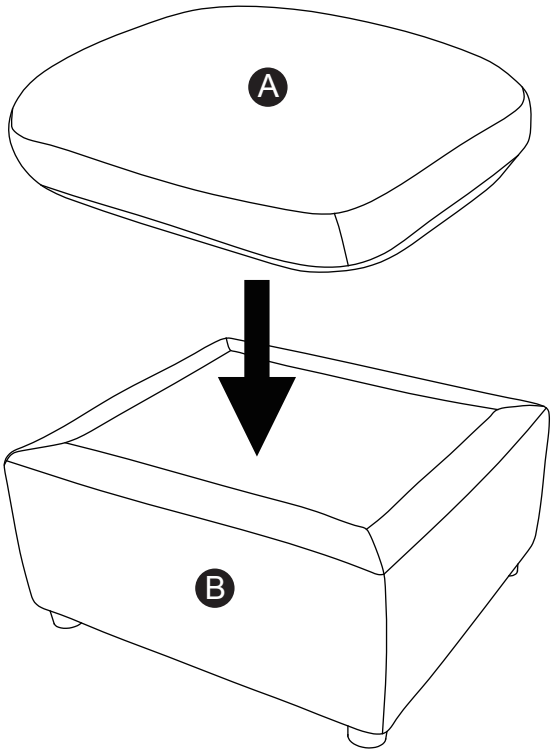

5 Assembly complete, it's ready to use.

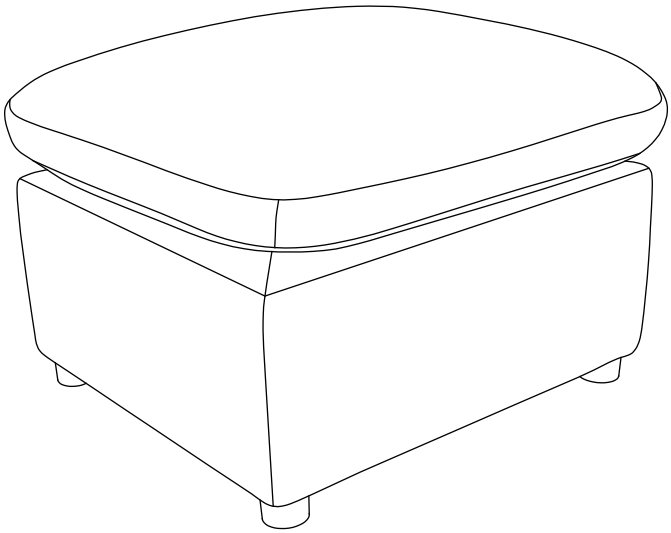

Design Exquisite Furniture For Your Home

PRODUCT WARRANTY

· 1-year limited on cover against splitting, peeling, and/or tearing.
· 1-year limited on internal and external frame structure.
· 1-year limited on cushioning material, seat springs and mechanism.

Contact us:

We make all efforts to guarantee that the products you receive are in excellent condition. If there are any parts missing or damaged, the Customer Service Team will be happy to provide free replacements for you. We have professional warehouses where the current inventory of parts is enough so that they will arrive in your hands as fast as possible.

Assistance with assembly or product details is available; don't hesitate to get in touch with us to get priority service.