Assembly Instructions

Caution : You must read this before you proceed

Care & Maintenance



- Not for commercial use. For residential use only.
- Furniture may scratch floors. We recommend using furniture pads to protect your floors.
- Do not put hot items directly on furniture surface.
- Do not clean furniture with harsh cleansers or polish.
- Do not place furniture under direct sunlight.
- Do not place furniture near heating or cooling vents.
- Do not write on furniture without a padded barrier to protect the surface.
- Do not place furniture outside . For indoor use only.
- Stains may be removed with mild soap solution and damp cloth.
- Children should not climb or jump on the furniture.



- Dust and pick-up spills using a clean, non-colored, lint-free cloth.

Please look in carton for hardware packs and legs.
Sets often ship in multiple boxes and may arrive a day or two apart.

DINING CHAIR
N711P497257

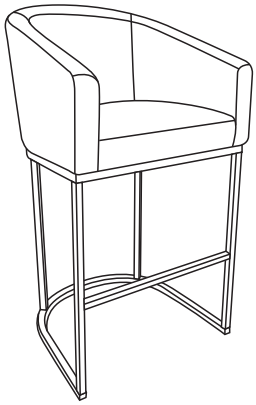

Parts List

	Picture	Description	QTY
①	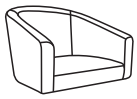		1
②	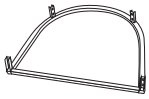		1
③	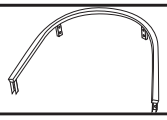		1
④			2
⑤			1
⑥	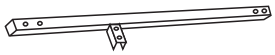		1
⑦			1

Hardware

Label	Picture	Description	QTY
Ⓐ		Bolt (M6x13mm)	20
Ⓑ		Bolt (M6x45mm)	3
Ⓒ		Washer (M6x16x1.5mm)	23
Ⓓ		Allen Wrench (M5)	1

Assembly Preparation

Before Beginning Assembly :

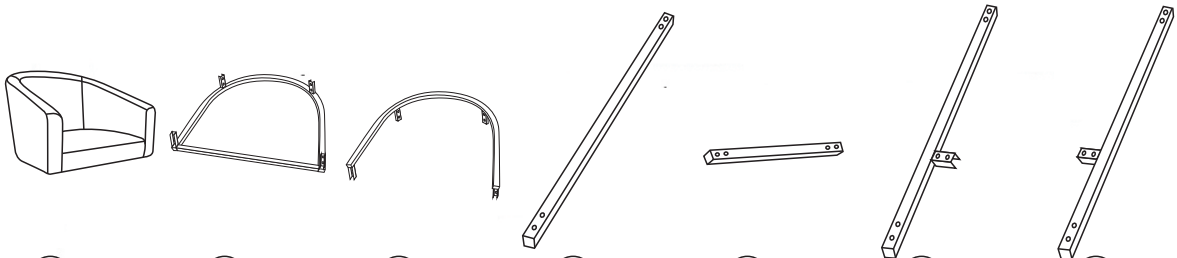

① x1 ② x1 ③ x1 ④ x2 ⑤ x1 ⑥ x1 ⑦ x1



Ⓐ x20 Ⓑ x3 Ⓒ x23 Ⓓ x1

- Read instructions, cover to cover-
- Have 2 adults on hand for assembly-
- Do not assemble on flooring or carpet-
- Assemble on a clean non-marring surface (packing foam)-
- Save all packaging until finished-

Assembly Steps

Overview

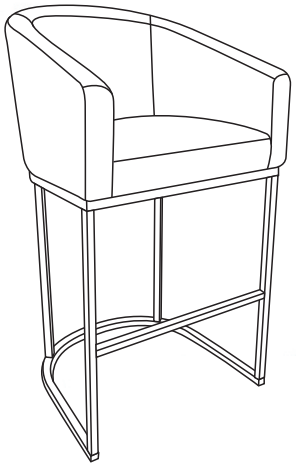

This Chair consists of multiple parts and may take up to 30 minutes to assemble. The picture above provides an overview of the Chair parts to help you visualize and understand each component. Before you start assembling, please read through the instructions below to familiarize yourself with the parts and steps.

Step1



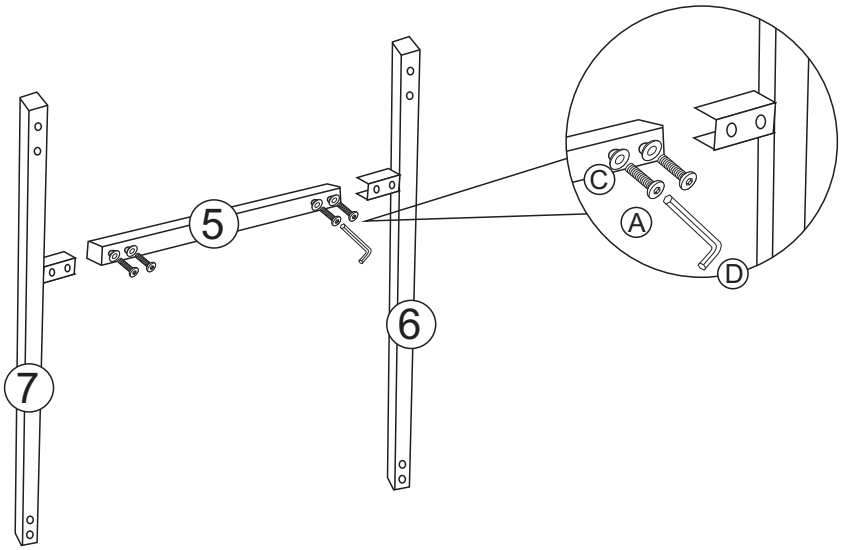

Ax4	Cx4	Dx1
		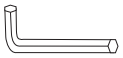

Step2

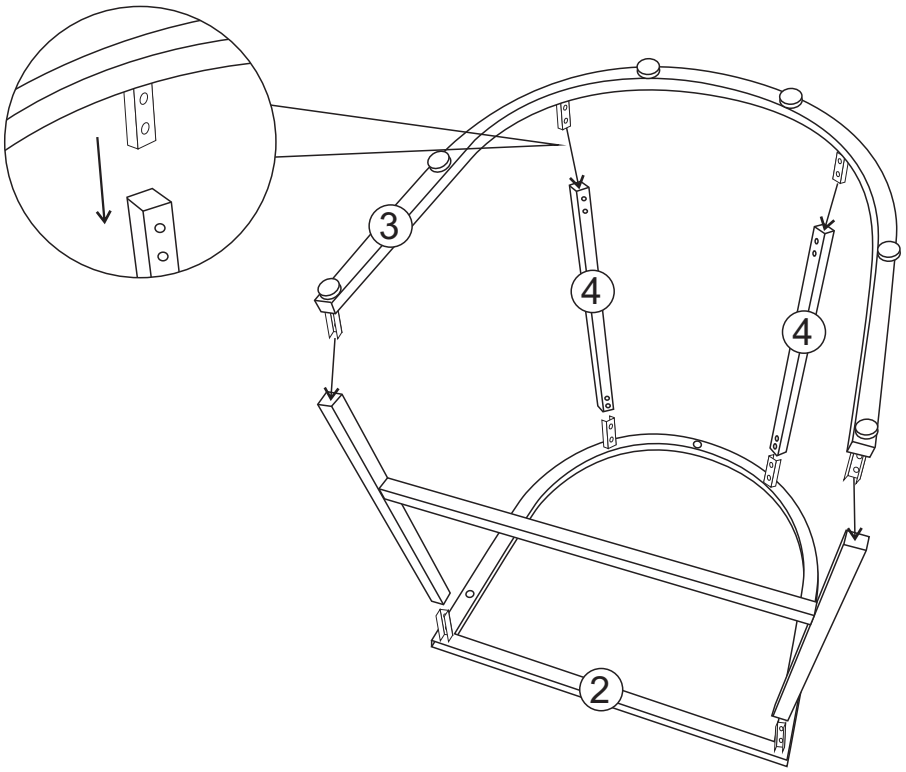

Step3

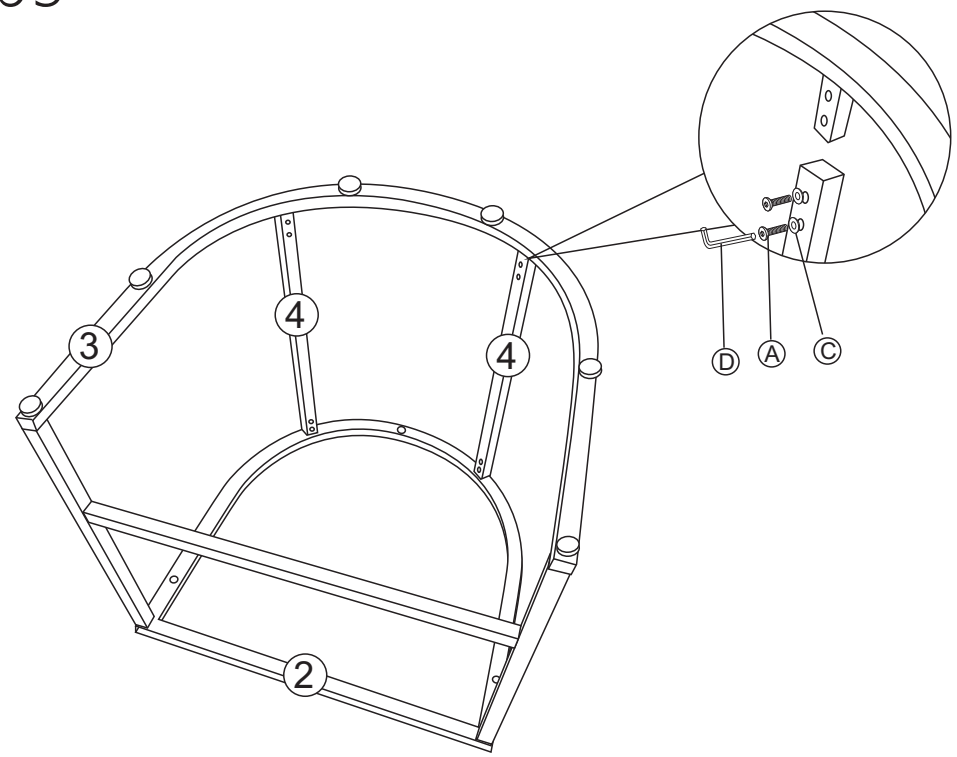

Ax16	Cx16	Dx1
		

Step4

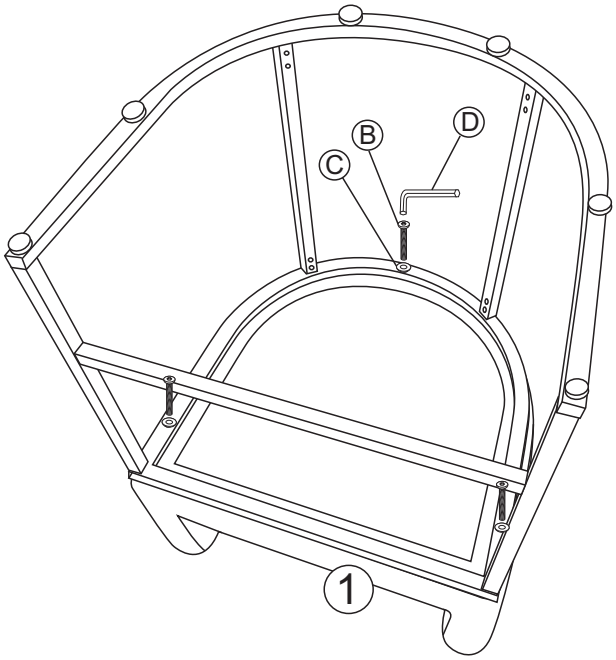

Bx3	Cx3	Dx1
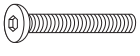		

Step 5

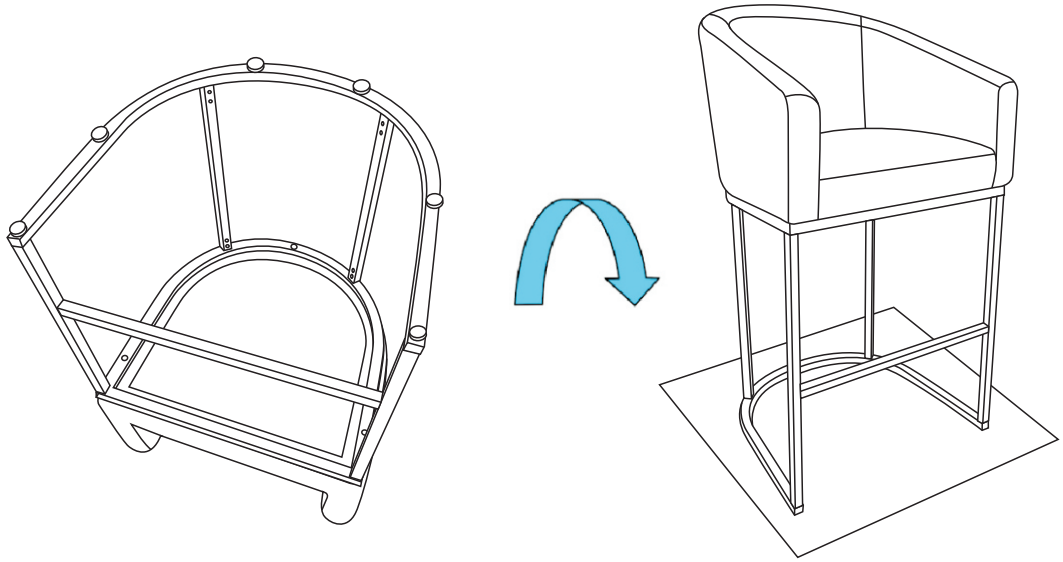

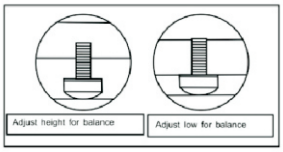

Step 6

