Pre-Installation

Tools Needed

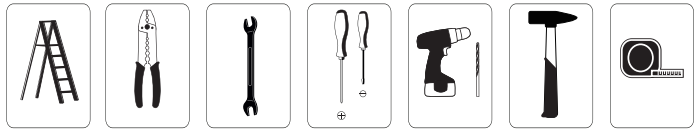

How to install the bracket

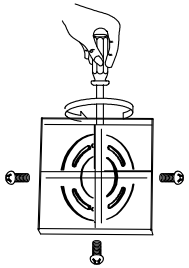

Firstly, Remove the bracket and four screws from the light fixture base.

Method 1:Octagon box

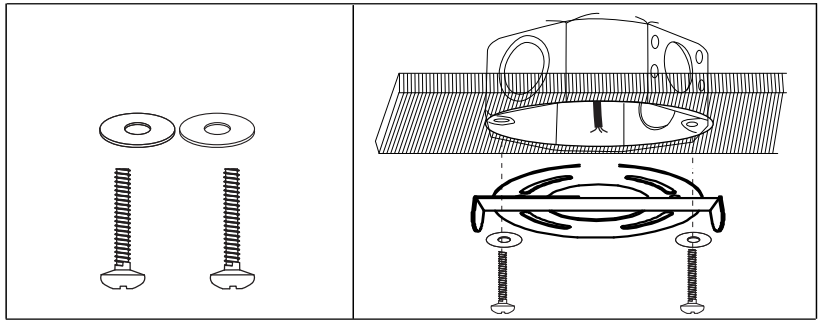

Method 2:Solid wood roof

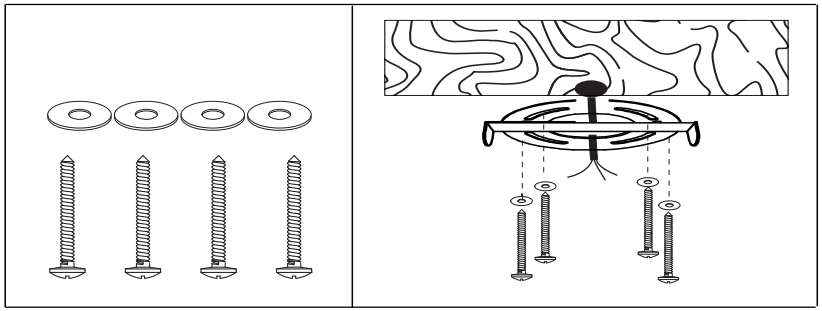

Method 3:Concrete roof

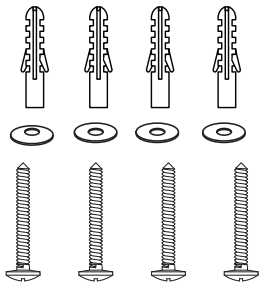

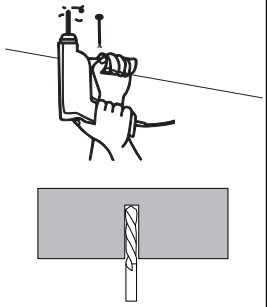

Draw the hole locations and drill holes.

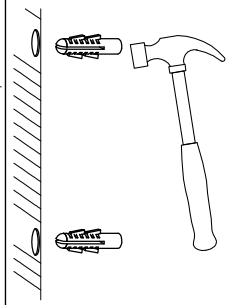

Press the expansion screws into the holes.

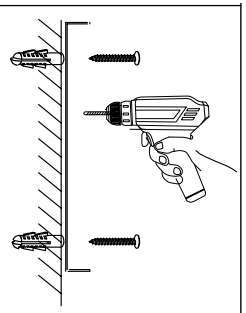

Align the bracket with the holes and fix it with screws.

How to connect wires

Failure to disconnect the power supply prior to installation may result in serious injury or death.

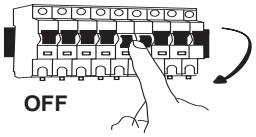

How to assemble the lamp fixture

This job will go easier with two people, because the light needs support during assembly and it helps having somebody to read the directions.

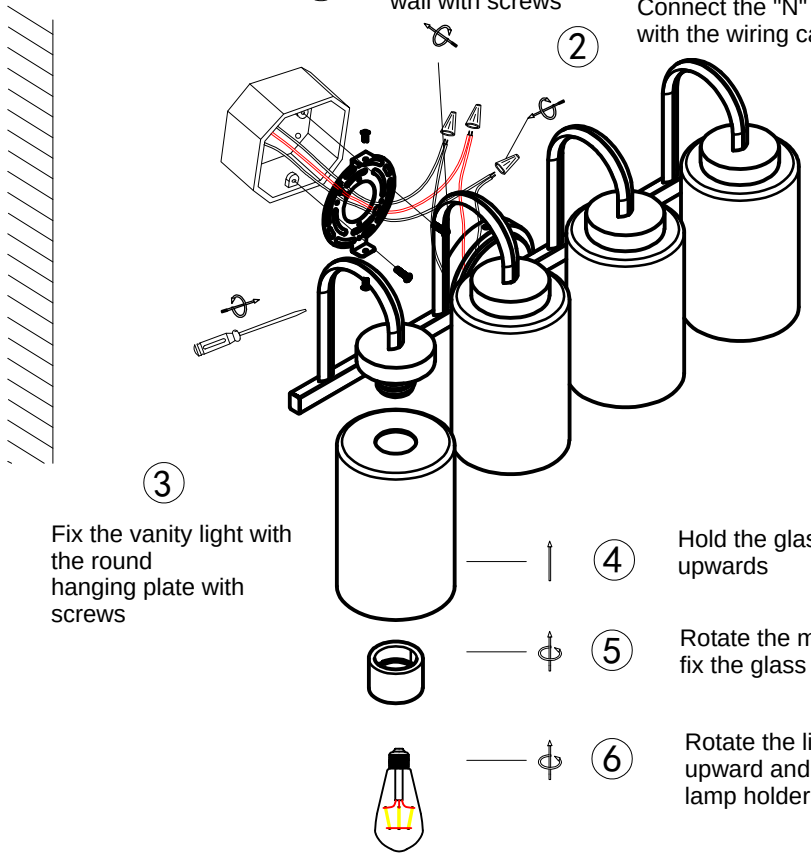

1 Fix the junction box to the wall with screws

2 Connect the "N" "L" wire with the wiring cap

3 Fix the vanity light with the round hanging plate with screws

4 Hold the glass vertically upwards

5 Rotate the metal ring to fix the glass

6 Rotate the light source upward and fix it on the lamp holder