INSTRUCTIONS

Note:

1.Please make sure that the electricity is powered off during installation!
2.Only a professional electrician should install this kind of products!

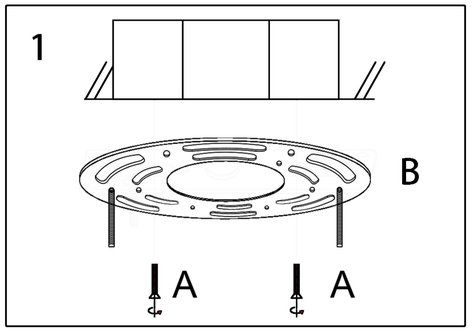

1.Install the bracket B to the ceiling junction box with screw A.

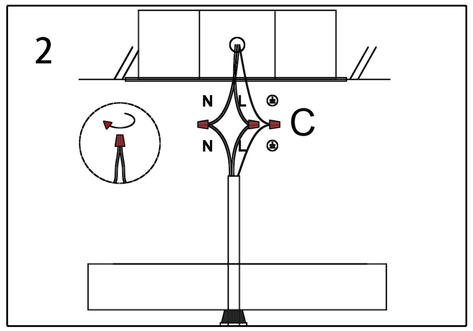

2. Connect the wire to your home line with cap connector C.

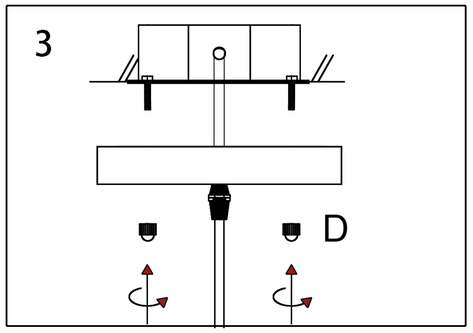

3. Install the canopy to the bracket with cap nuts D.

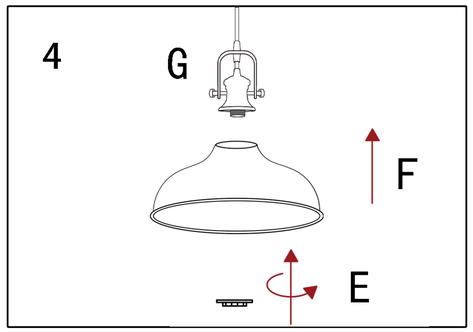

4. Install the lampshade F to the fixture with socket ring E, after that install the bulb.

INSTRUCTIONS

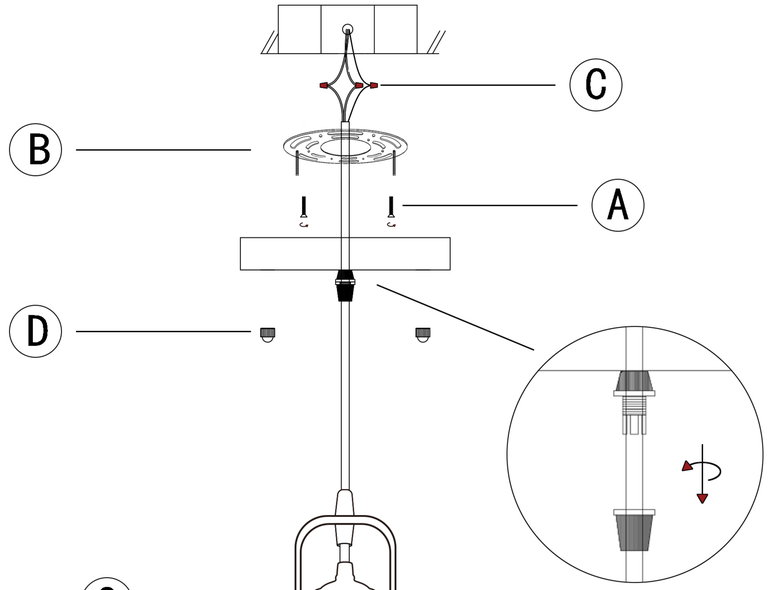

Loosen the threaded cord grip to adjust the length of the wire, rotate to close the grip when get suitable heigth of the light.

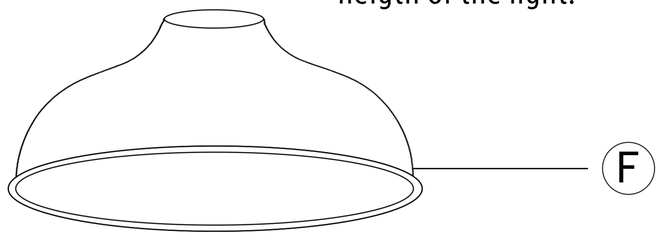

A 3PCS	B 1PCS	C 3PCS	
D 2PCS	E 1PCS	F 1PCS	G 1PCS