SERA BATHROOM DESIGNS

MWT48X32RSB

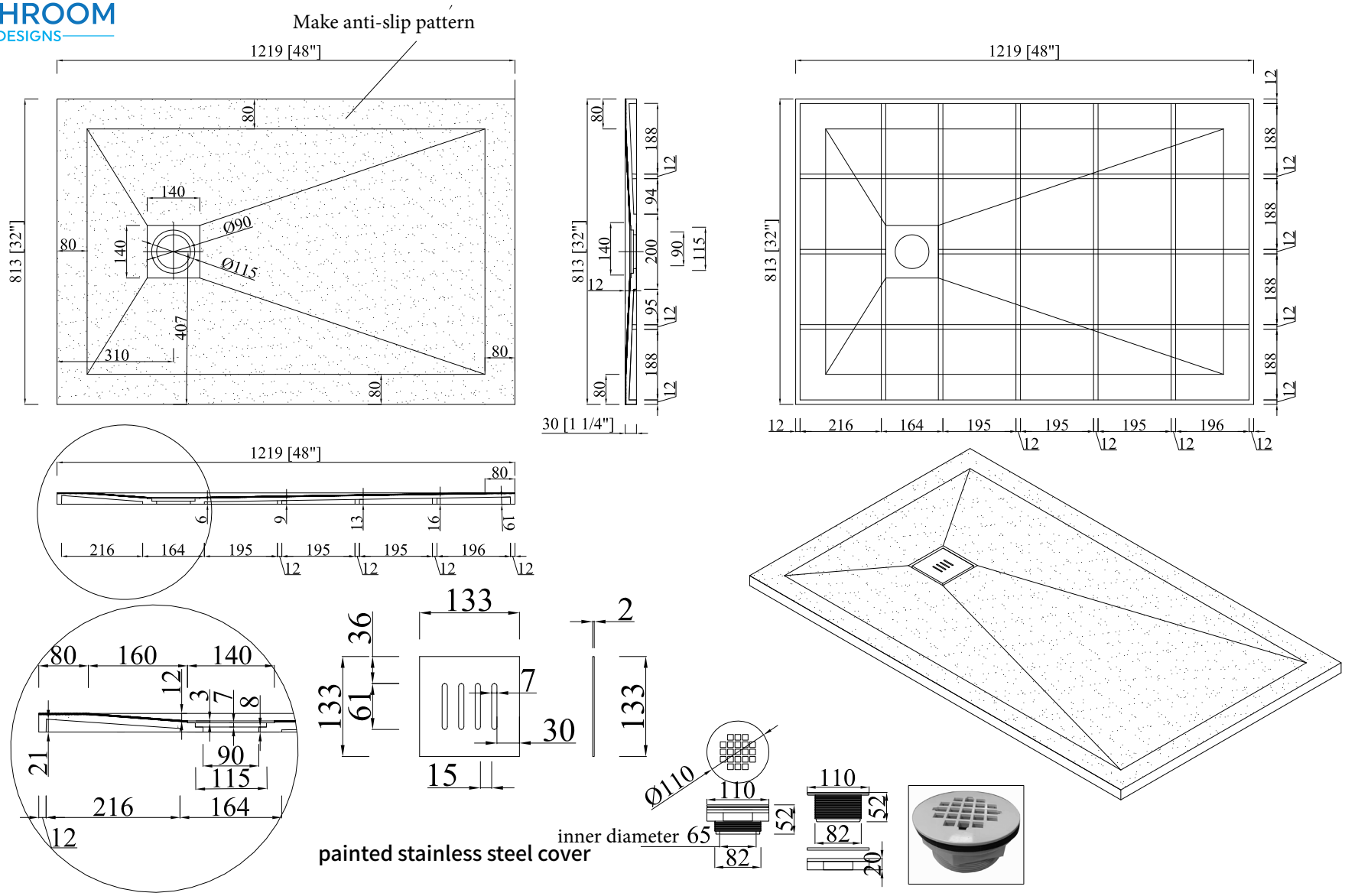

Drain

Size	>0-300mm	>300-500mm	>500-900mm	>900-1200mm	>1200mm以上		Model	GM-3129	Customer Model	CSTM-3117-4832	Drawing No	GM20240528-04
mm	±1	±2	±3	±4	±5				Edition	A/3		
1219mm*813mm*30mm							Tolerance	±2	Start Date	20240528		