TEAR SHEET

Comtesse Small Pendant
Item # PCD 5120BZ

Designer: Paloma Contreras

O/A Height: 49.5"
Fixture Height: 6.75"
Width: 7.5"
Canopy: 5" Round
Finishes: BZ, HAB, PN
Socket: Dedicated LED
Wattage: 12w (1100lm)
Weight: 6 Pounds
Note: UL Only | Custom Height Available

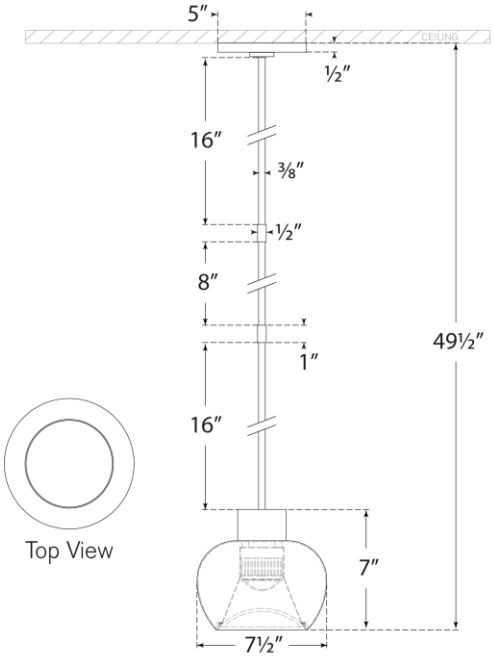

VISUAL COMFORT & CO.