ASSEMBLY GUIDE & CARE INFORMATION

FOR YOUR FULL SIZE BED

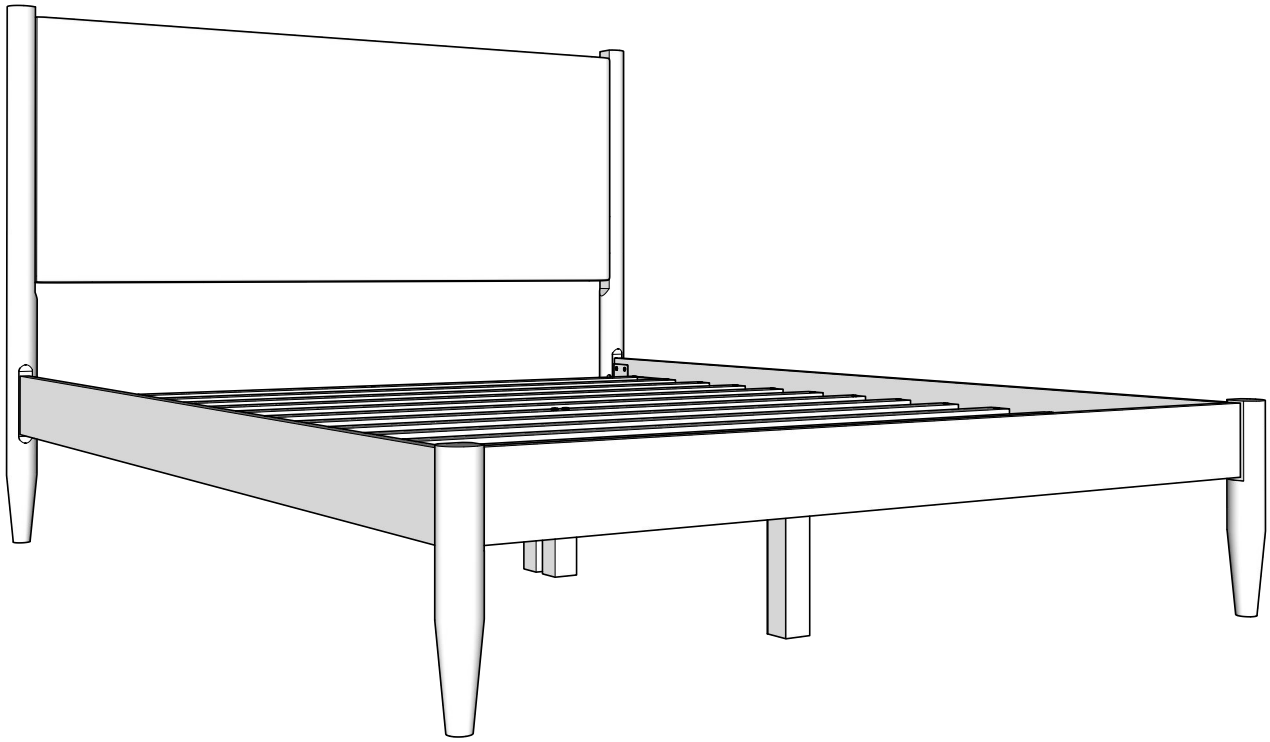

Most customers assemble under 60 minutes

Assembly is easiest with 2 people

Required tool (not provided)
#2 Phillips Screwdriver

Important Assembly & Safety Notes

1. **Do not assemble or use this product if any parts are missing, damaged, or broken.**
   Contact customer support for factory replacement parts before proceeding.

2. **Carefully check all packing materials before discarding the carton.**
   Small hardware may have come loose during shipment.

3. **Identify and count all parts and hardware before starting.**
   Compare each item with the parts and hardware list in the instructions.

4. **Follow the assembly steps exactly as shown.**
   Improper assembly may result in personal injury or property damage.

5. **Some parts may be heavy or have sharp edges.**
   Use caution when handling components.

6. **Secure all bolts firmly before use.**
   Do not use the bed until all fasteners are fully tightened.

7. **Recheck and tighten all bolts every 90 days.**
   This helps maintain long-term stability and prevents loosening over time.

8. **Do not drag or push the bed frame.**
   Always use two people to lift and reposition the bed. Dragging may damage the legs, slats, or center support.

9. **Use floor protection on non-carpeted surfaces.**
   An area rug or furniture pads are recommended (not included).

10. **Do not use or store this product near open flames or flammable chemicals.**

11. **Keep these instructions for future reference and maintenance.**

Need a replacement part?

Please contact us through the website used for your purchase.
To help us resolve your request quickly, include:

- **Clear photos of the issue**
- **The part number and quantity needed**

IMPORTANT: Seller and Manufacturer disclaim all and any liability for property damage, personal injury, or loss, direct, indirect, or incidental, resulting from the incorrect assembly, inadequate maintenance, improper use, or neglect of this product.

Bed Parts Check List

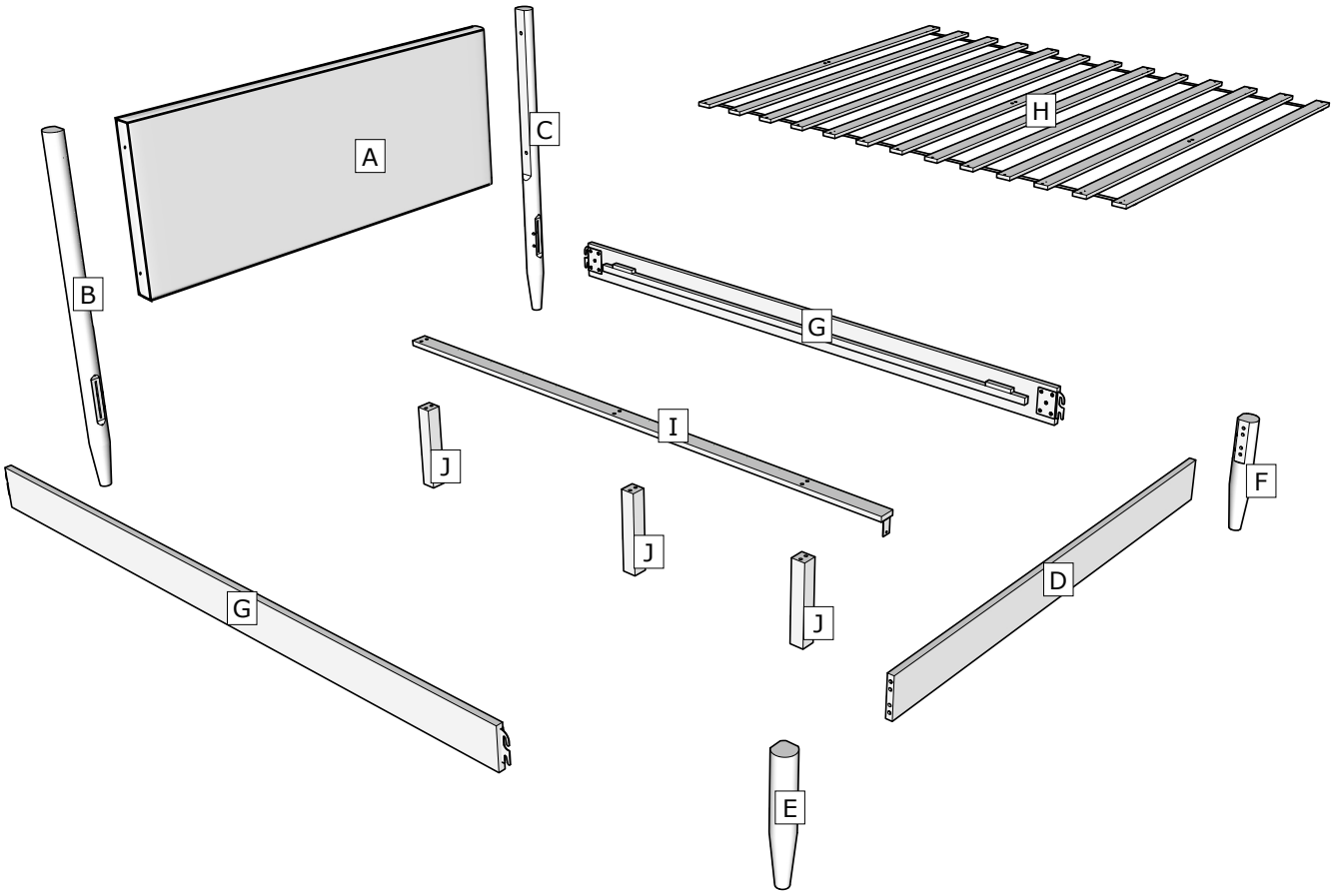

A	Headboard	x1
B	Headboard Post Left	x1
C	Headboard Post Right	x1
D	Footboard	x1
E	Footboard Leg Left	x1
F	Footboard Leg Right	x1
G	Side Rail	x2
H	Bed Slat	x13
I	Center Rail	x1
J	Center Support Leg	x3

Need a replacement screw?
Refer to the Hardware Check List below for size specifications.

K	Bolt	x4	M6 x 40mm	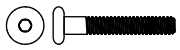
L	Bolt	x6	M6 x 60mm	
M	Bolt	x4	M6 x 50mm	
N	Spring Washer	x8	M6	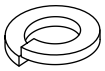
O	Flat Washer	x4	M6	
P	Screw	x1	M3.5 x 16mm	
Q	Screw	x26	M4 x 32mm	
R	Plastic Dowel	x4	25mm	
S	Ball End Hex Key Wrench	x1	M4	

Required Tool
(Not Provided)
#2 Phillips Screwdriver

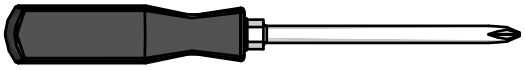

Bed Assembly Step 1

A Headboard x1	**B** Headboard Post Left x1	**C** Headboard Post Right x1	**M** Bolt x4 M6 x 50mm
N Spring Washer x4 M6	**O** Flat Washer x4 M6	**S** Ball End Hex Key Wrench x1 M4	

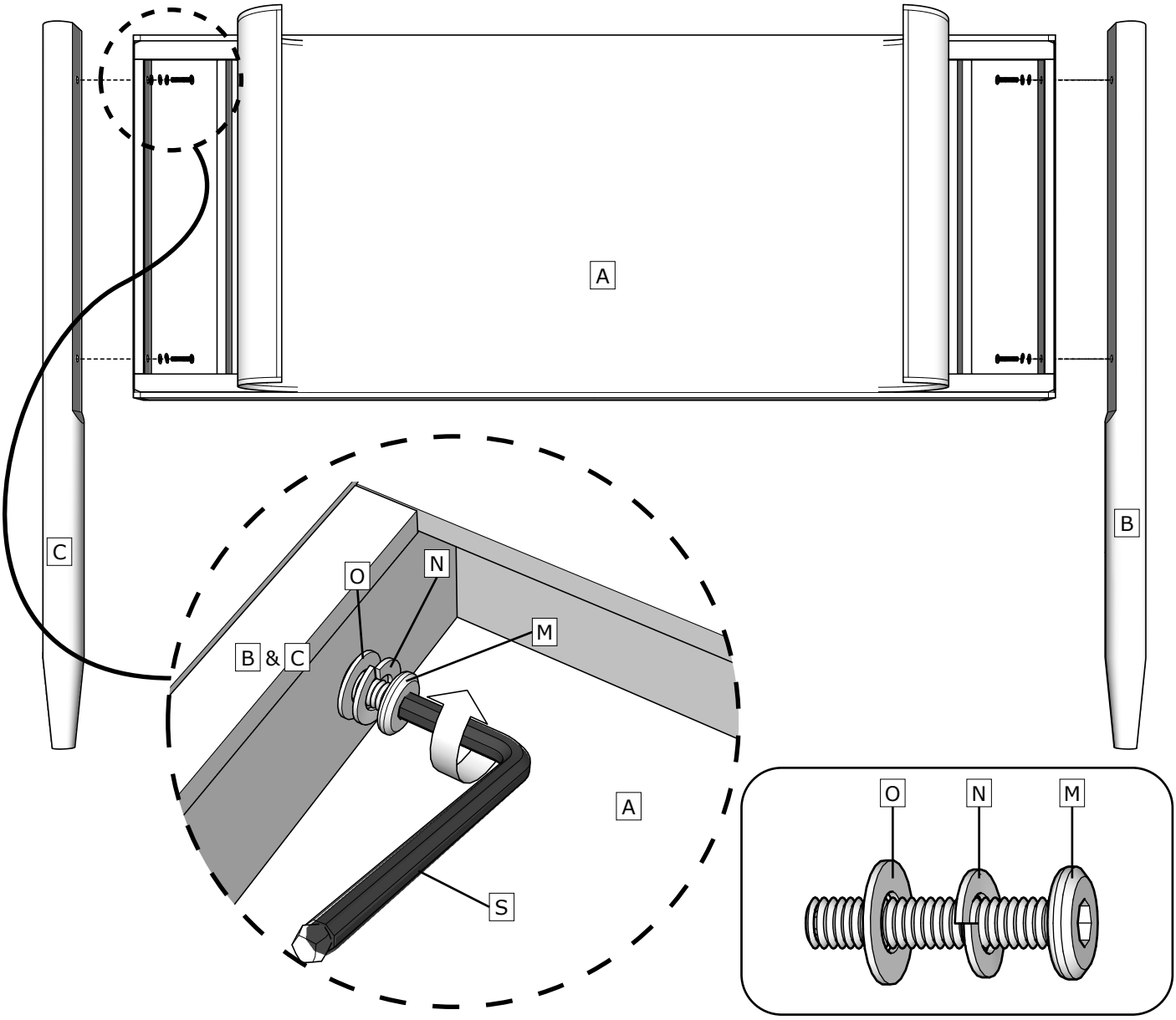

- Pull the fabric from the back of the headboard toward the inside on both the left and right sides.
- Attach A to B and C with M, N, and O using a Ball End Hex Key Wrench S as shown.

Bed Assembly Step 2

D Footboard	E Footboard Leg Left	F Footboard Leg Right	R Plastic Dowel
x1	x1	x1	x4 25mm

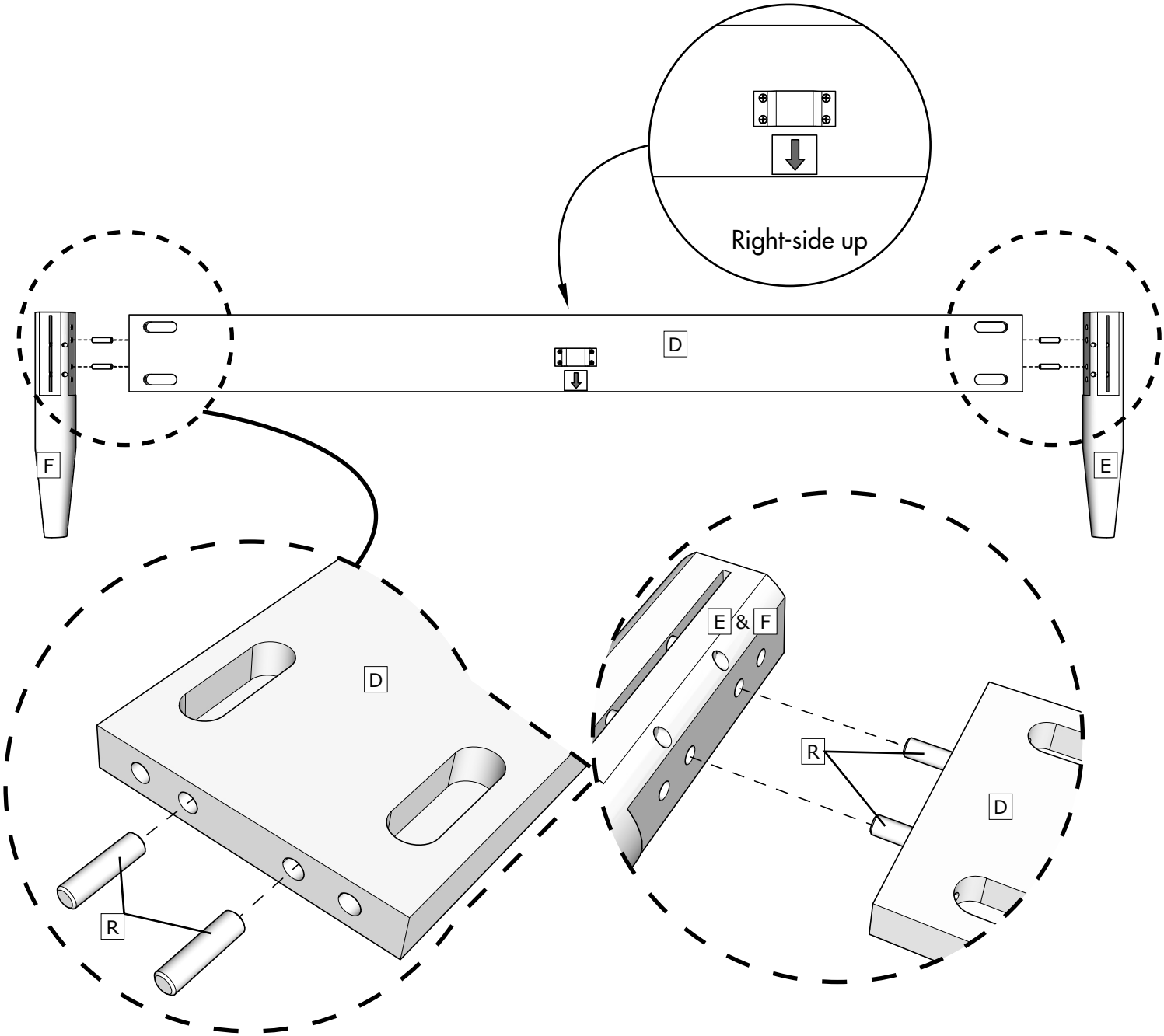

- Insert R into D as shown.
- Attach E and F to D as shown.

Bed Assembly Step 3

N	K	S
Spring Washer	Bolt	Ball End Hex Key Wrench
x4	x4	x1
M6	M6 x 40mm	M4

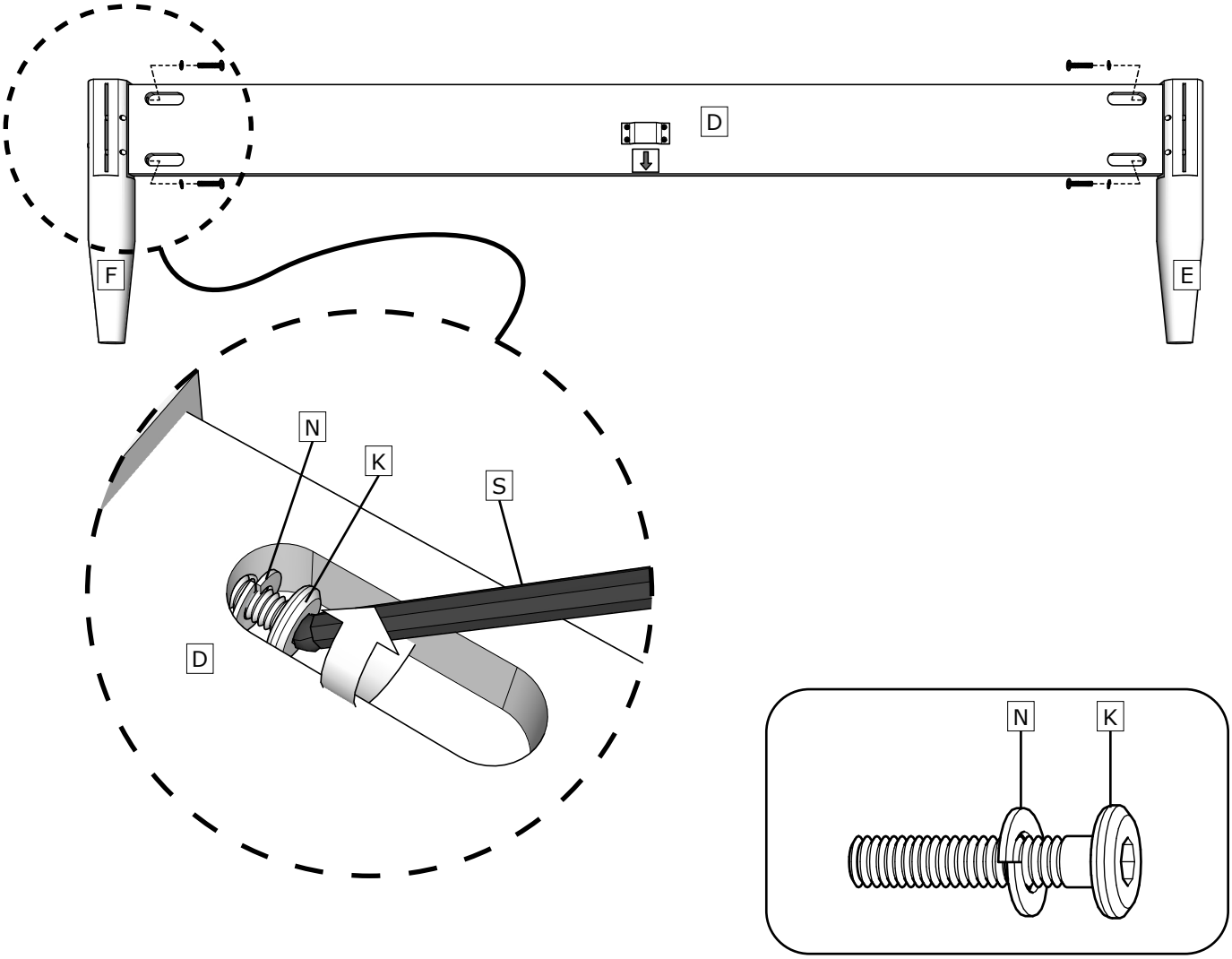

- Affix K and N to Assembled Footboard using a Ball End Hex Key Wrench S as shown.

Bed Assembly Step 4

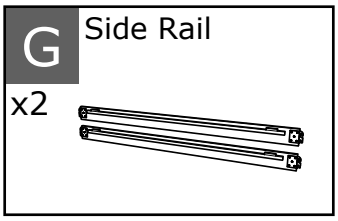

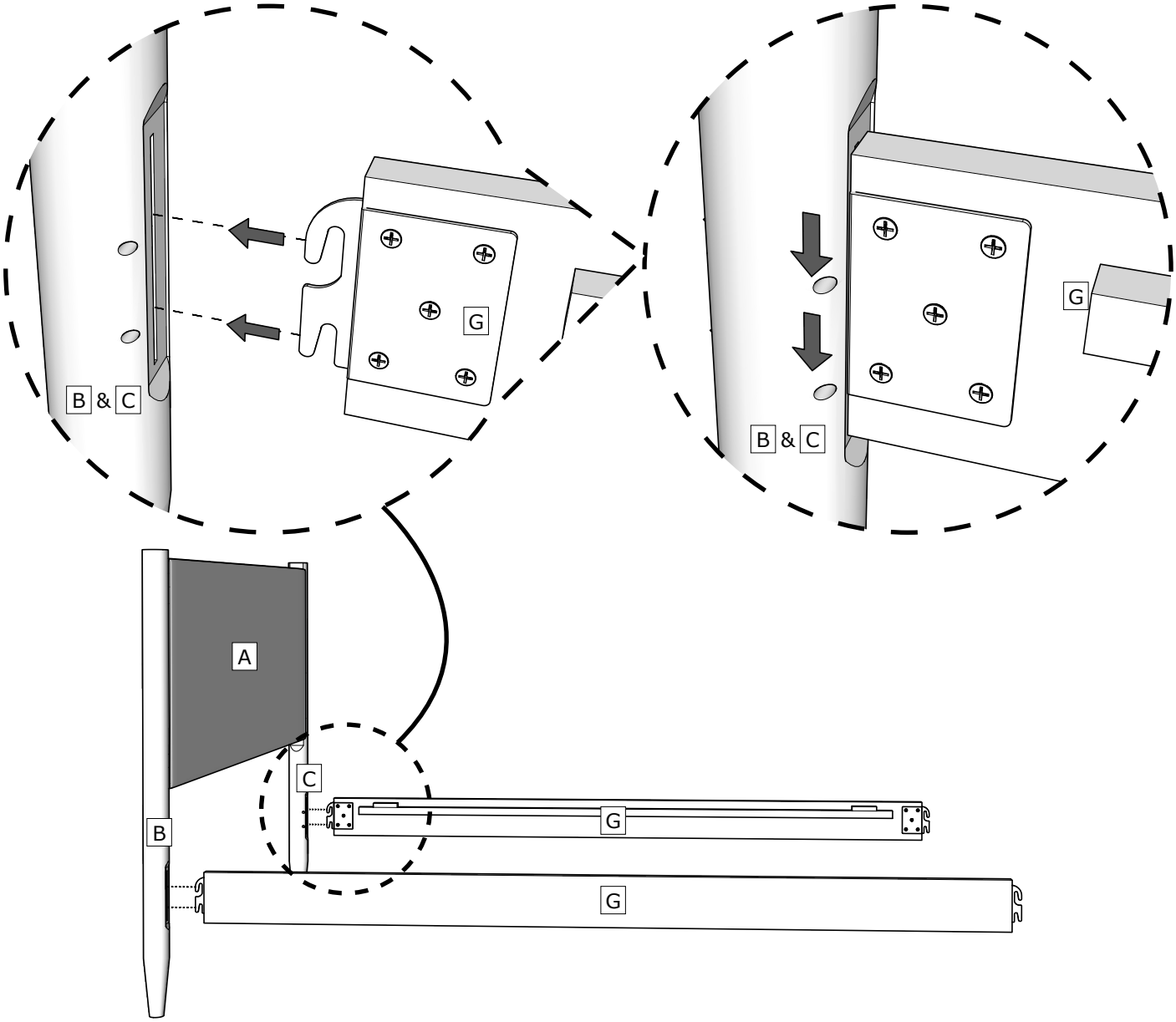

- Insert G into cut out slots on Assembled Headboard and push down.

Bed Assembly Step 5

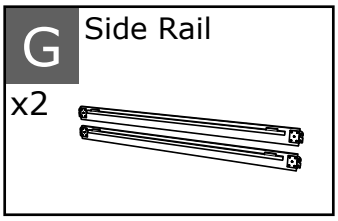

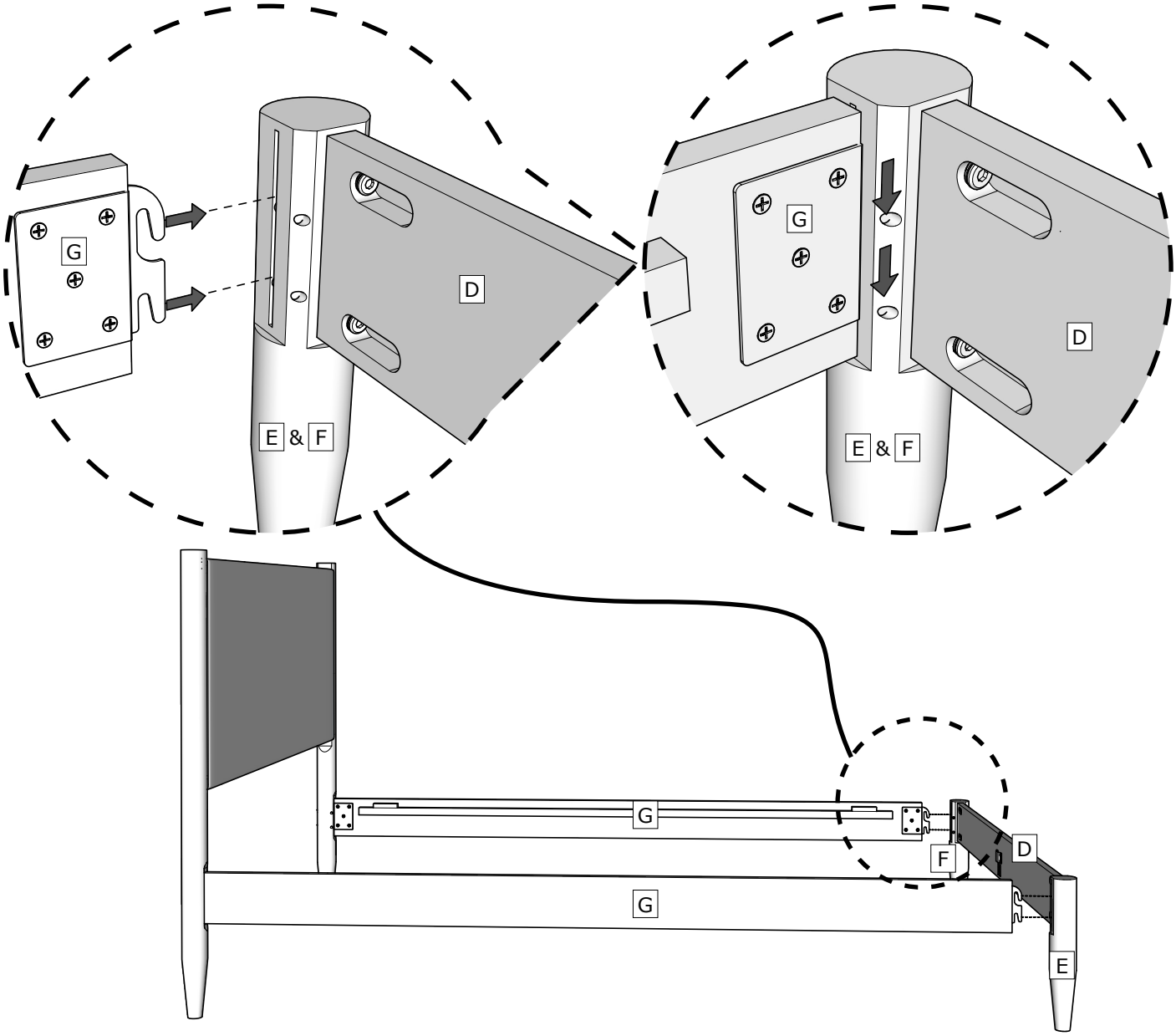

- Insert G into cut out slots on Assembled Footboard and push down.

Bed Assembly Step 6

H Bed Slat x13	I Center Rail x1	J Center Support Leg x3	L Bolt x6 M6 x 60mm
S Ball End Hex Key Wrench x1 M4			

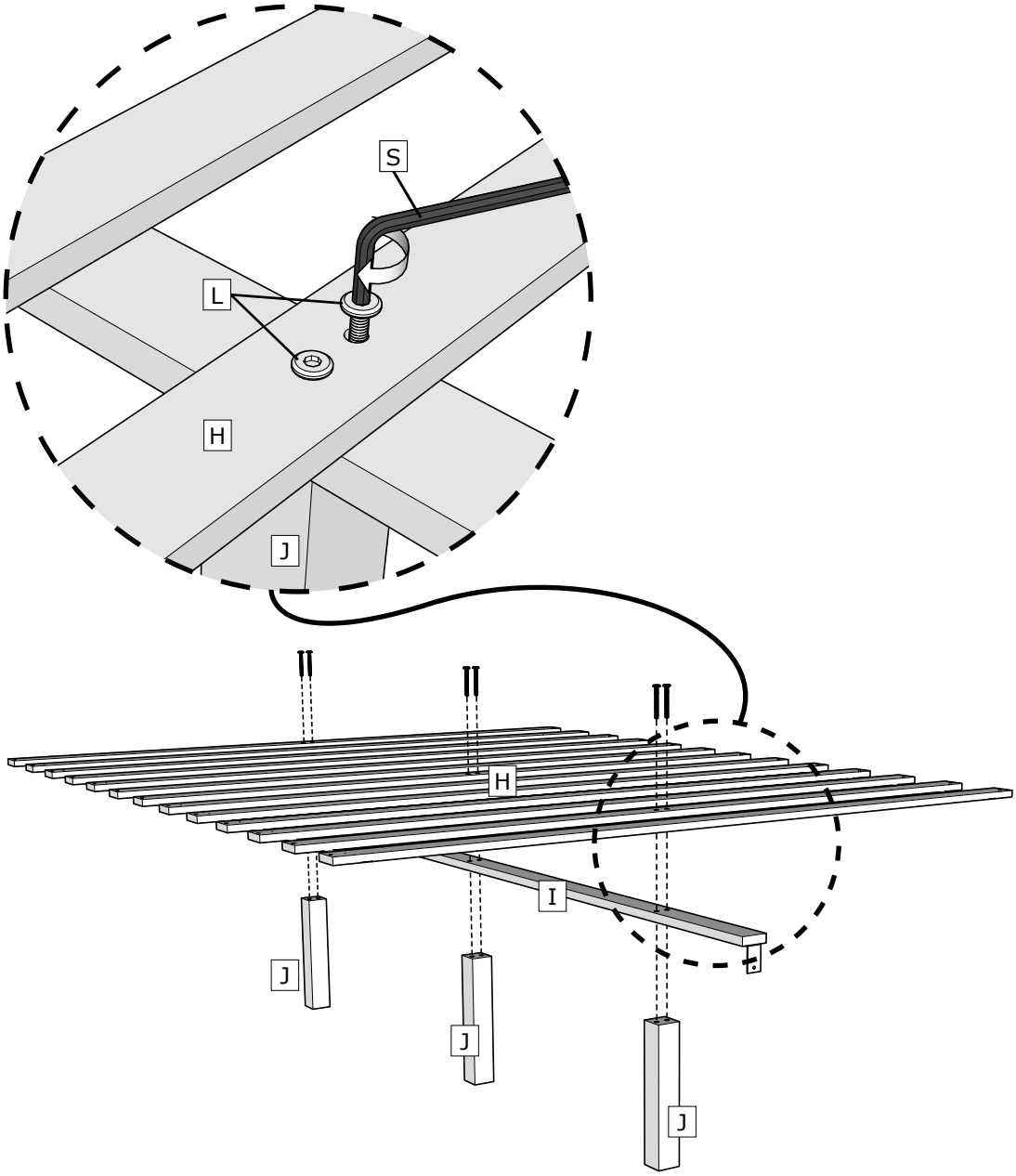

- Attach H and J to I with L using a Ball End Hex Key Wrench S as shown.

Bed Assembly Step 7

P Screw x1 M3.5 x 16mm	Phillips Screwdriver Not provided

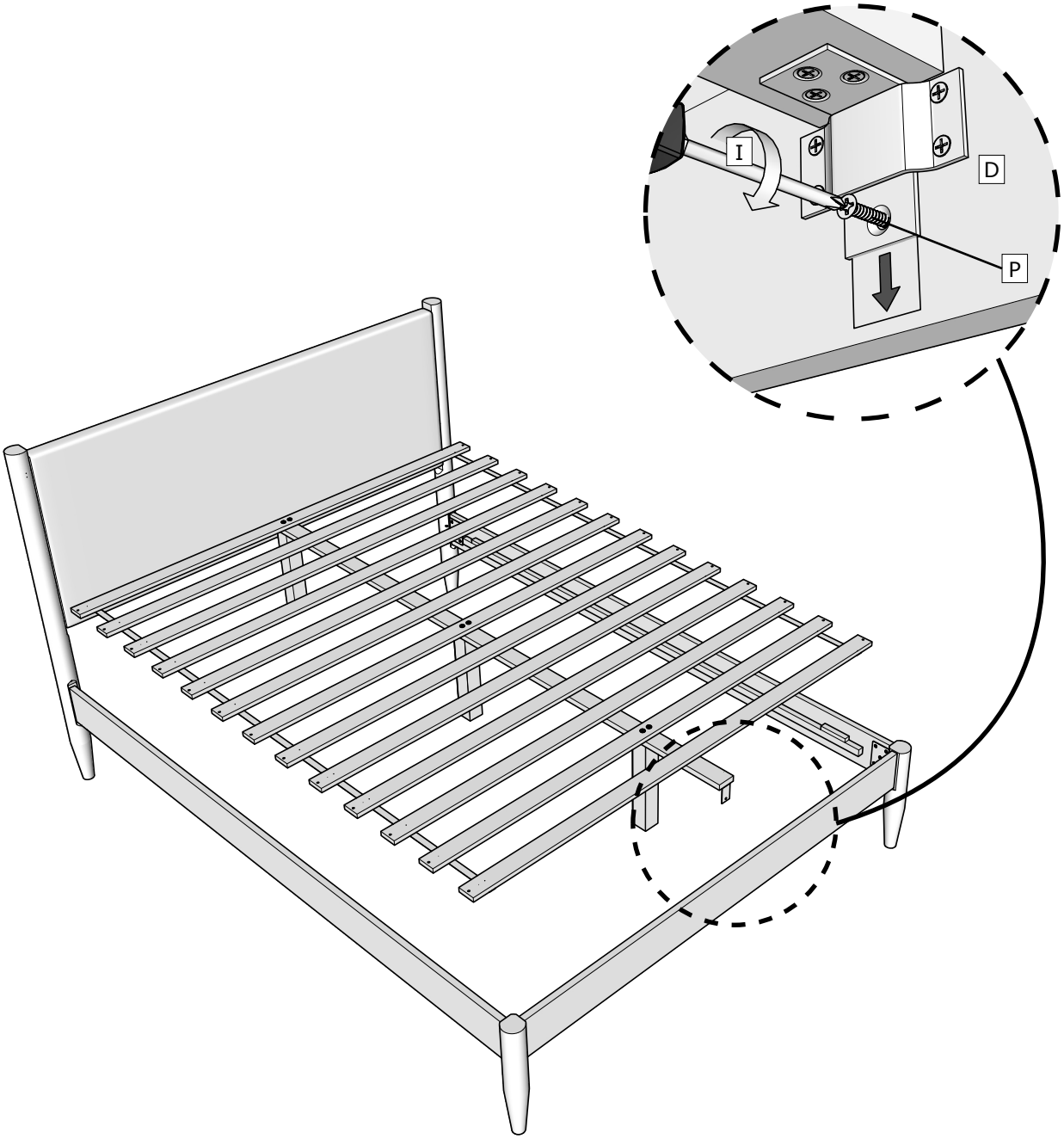

• Insert the Center Rail of the Assembled Bed Slats into the metal bracket on the footboard, then secure it with screw P using a Phillips Screwdriver.

Bed Assembly Step 8

Q Screw x26	Phillips Screwdriver
M4 x 32mm	Not provided

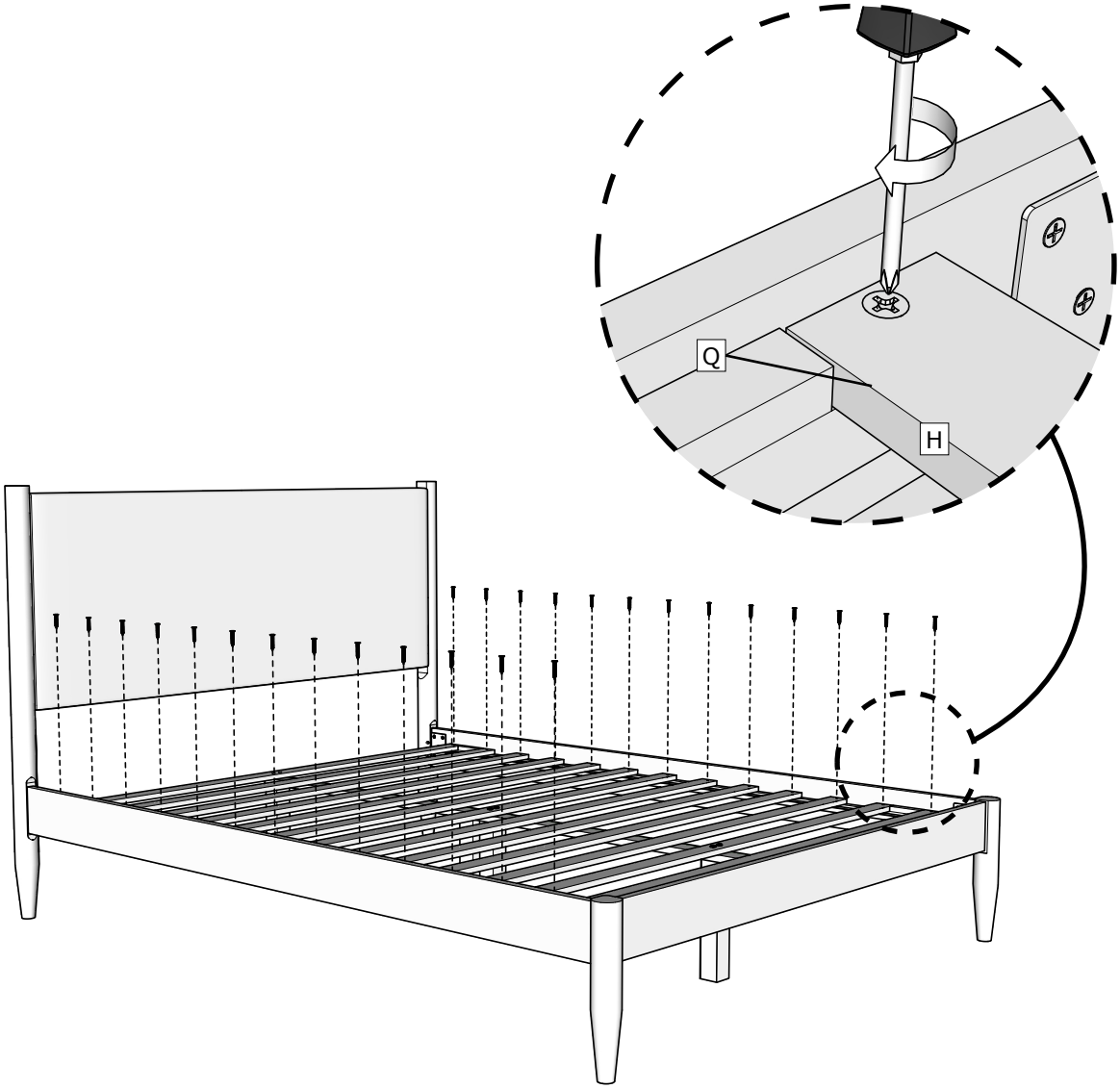

- Affix Q to Assembled Bed using a Phillips Screwdriver as shown.

WARNING: Do not drag or push the bed frame. To ensure safe moving, always use two people to lift and re-position the bed frame. Avoid dragging or pushing it across the floor to prevent damage to the legs, slats, and center support legs.

FAQs FREQUENTLY ASKED QUESTIONS

WE ARE OPEN MONDAY TO FRIDAY TO ASSIST YOU AND WILL REPLY TO ANY OF YOUR MESSAGES WITHIN 24-48 HOURS. THE AVERAGE RESPONSE TIME IS WITHIN 24 HOURS. IF YOU ENCOUNTER AN ISSUE THAT IS NOT MENTIONED BELOW, PLEASE MESSAGE US.

WHERE IS THE REST OF MY ORDER? THE PACKAGE I RECEIVED SAYS CARTON NO. 1 OF 3, CARTON NO. 3 OF 5, OR CARTON NO. 5 OF 6 ETC.

THE MARKETPLACE ONLY ALLOWS 1 TRACKING NUMBER TO BE UPLOADED IN THE SYSTEM. HOWEVER, THE PRODUCT IS SHIPPED IN MULTIPLE PACKAGES. YOU CAN CONFIRM THE NUMBER OF PACKAGES TO RECEIVE BY REFERRING TO THE CARTON NO. PRINTED ON THE PACKAGE THAT WAS DELIVERED TO YOU. FOR EXAMPLE, YOU RECEIVED 1 PACKAGE AND THE PACKAGE SHOWS CARTON NO. 1 OF 3, THEN CARTON NO. 2 OF 3 AND CARTON NO. 3 OF 3 IS IN TRANSIT TO YOU. THE REST OF THE PACKAGES CAN BE DELIVERED WITHIN THE SAME DAY AS THE FIRST PACKAGE OR WITHIN A FEW DAYS. ONCE THE ORDER IS SHIPPED CONFIRMED, OUR TEAM WILL SEND YOU A MESSAGE TO PROVIDE YOU WITH ALL THE TRACKING NUMBER THAT COMPLETES YOUR ORDER. IF YOU DID NOT RECEIVE THIS MESSAGE, PLEASE CHECK YOUR EMAIL'S SPAM FOLDER, OR LOG INTO THE MARKETPLACE ACCOUNT AND SEND US A MESSAGE.

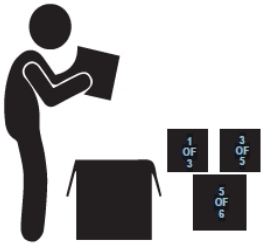

MY ORDER IS DAMAGED, WHAT DO I DO?

INCLUDE THE ORDER NUMBER AND ATTACH APPLICABLE IMAGES TO EXPEDITE THE CLAIM AND ENSURE OUR TEAM WILL PROVIDE THE APPROPRIATE RESOLUTION

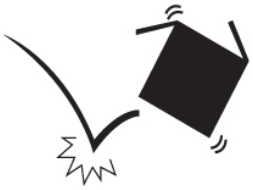

I TRACKED THE PACKAGE AND IT SHOWS MY PACKAGE WAS DELIVERED, BUT I NEVER RECEIVED THE PACKAGE. I DOUBLE CHECKED WITH MY FAMILY MEMBER AND NEIGHBOR; THEY DO NOT HAVE THE PACKAGE. WHAT DO I DO?

INCLUDE THE ORDER NUMBER AND LET US KNOW WHICH CARTON NUMBER OR TRACKING NUMBER YOU DID NOT RECEIVE, AND A TEAM MEMBER WILL REPLY TO YOUR MESSAGE ACCORDINGLY.

LOVE THE PRODUCT?

LOG INTO THE MARKETPLACE YOU MADE THE ORDER AND SHARE YOUR EXPERIENCE WITH THE PRODUCT AND WHAT YOU LIKE MOST ABOUT IT. ELEVATE THE PRODUCT REVIEW BY INCLUDING IMAGES OF THE PRODUCT TO SHARE WITH EVERYONE.

★★★★★