Children Toy Tractor

Battery Powered Ride-on

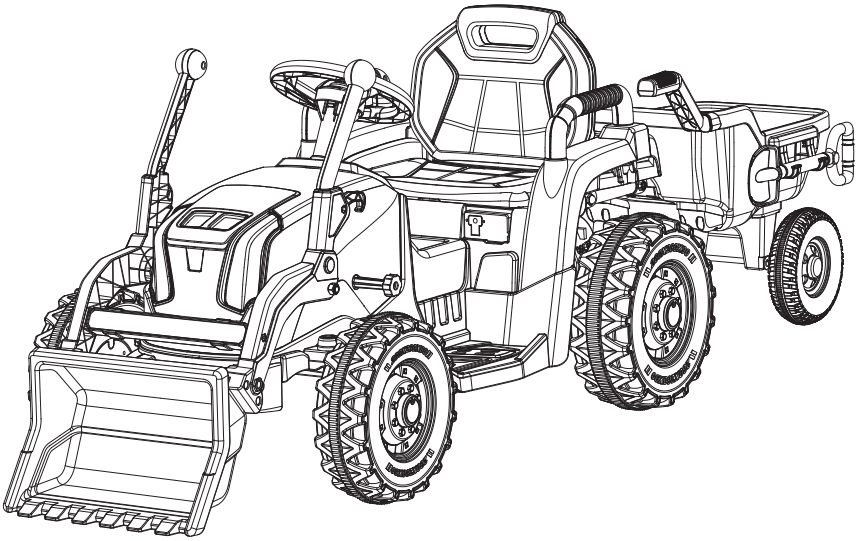

User Manual

Styles and colo(u)rs may vary
Made in China

⚠ WARNING!

Must be assembled by adults.



1 About Your New Ride-on

The owner's manual contains important safety information as well as assembly, use and maintenance instructions.

The ride-on must be assembled by an adult who has read and understands the instructions in this manual.

Keep the package away from children and dispose of properly before use.

Keep this manual for future reference.

SPECIFICATIONS:

Battery:	12V4.5AH*1, or 12V7AH*1, or 24V5AH *1
Charger:	Input: Depend on local voltage
	Output: 12V500mA, or 12V1A, or 24V500mA
Suitable age:	37-96 months
Load capacity:	Under 30kg
Speed:	3-6 km/h
Product size:	187 * 51 * 53 CM
Power type:	Charging type
Charge time:	8-10 hours

2 User Notice

⚠ WARNING!

- CHOKING HAZARD - Small parts. Not suitable for children under 3 years old (36 months). The product contains small parts, keep children away when assembling.
- Always remove protective material and poly bags and dispose before assembly.
- Recommended protective equipment (helmet, gloves, knee-pads, elbow-pads, etc). Protective equipment should be worn. Always wear shoes and sit in the seat when operating the vehicle.
- Only drive on level ground. Never use on the lawn.
- Keep your hands, hair, and clothes away from moving parts.
- Never leave child unattended. Direct adult supervision is required. Always keep child in view when child is in vehicle.
- To reduce the risk of injury, adult supervision is required. Never use in roadways, near motor vehicles, on or near steep inclines or steps, swimming pools or other bodies of water, always wear shoes, and never allow more than 1 rider.
- Never use in unsafe conditions such as snow, rain, loose dirt, mud, sand, or gravel, otherwise may result in an unexpected accident such as tipping over, and could damage the electrical system or battery
- Not to be used in traffic.
- This toy should be used with caution since skill is required to avoid falls or collisions causing injury to the user or third parties.
- This toy is unsuitable for children under 3 years old (36 months) due to its maximum speed; Maximum user weight is 30kg.
- This toy has no brake.
- Use only battery(ies) and charger specified by the manufacturer. Using another battery or charger may cause a fire or explosion. Do not use the battery or charger for any other product.

3 User Notice

⚠ WARNING! Must be assembled by adults.

⚠ BATTERY INFORMATION (For 1.5V)

- Non-rechargeable batteries are not to be recharged.
- Rechargeable batteries are to be removed from the toy before being charged.
- Rechargeable batteries are only to be charged under adult supervision.
- Different types of batteries (carbon-zinc, alkaline, rechargeable batteries) or new and used batteries are not to be mixed.
- Batteries are to be inserted with the correct polarity.
- Exhausted batteries are to be removed from the toy.
- The supply terminals are not to be short-circuited.

⚠ WARNING!

The remote control is not a toy. It is for the adult use only, and should not be used by a child. A close adult supervision is always required. Reception range may change significantly with weather, battery, and other environmental conditions.

⚠ WARNING!

All circuit connections in the toy must be connected properly. Any wrong circuit connections could cause possible dangerous malfunctions, short circuit , sudden equipment failure and other possible failure.

US: ⚠ WARNING! The battery on the vehicle is not replaceable.

4 Parts Diagram

HINT: Some parts shown are assembled on both sides of vehicle.

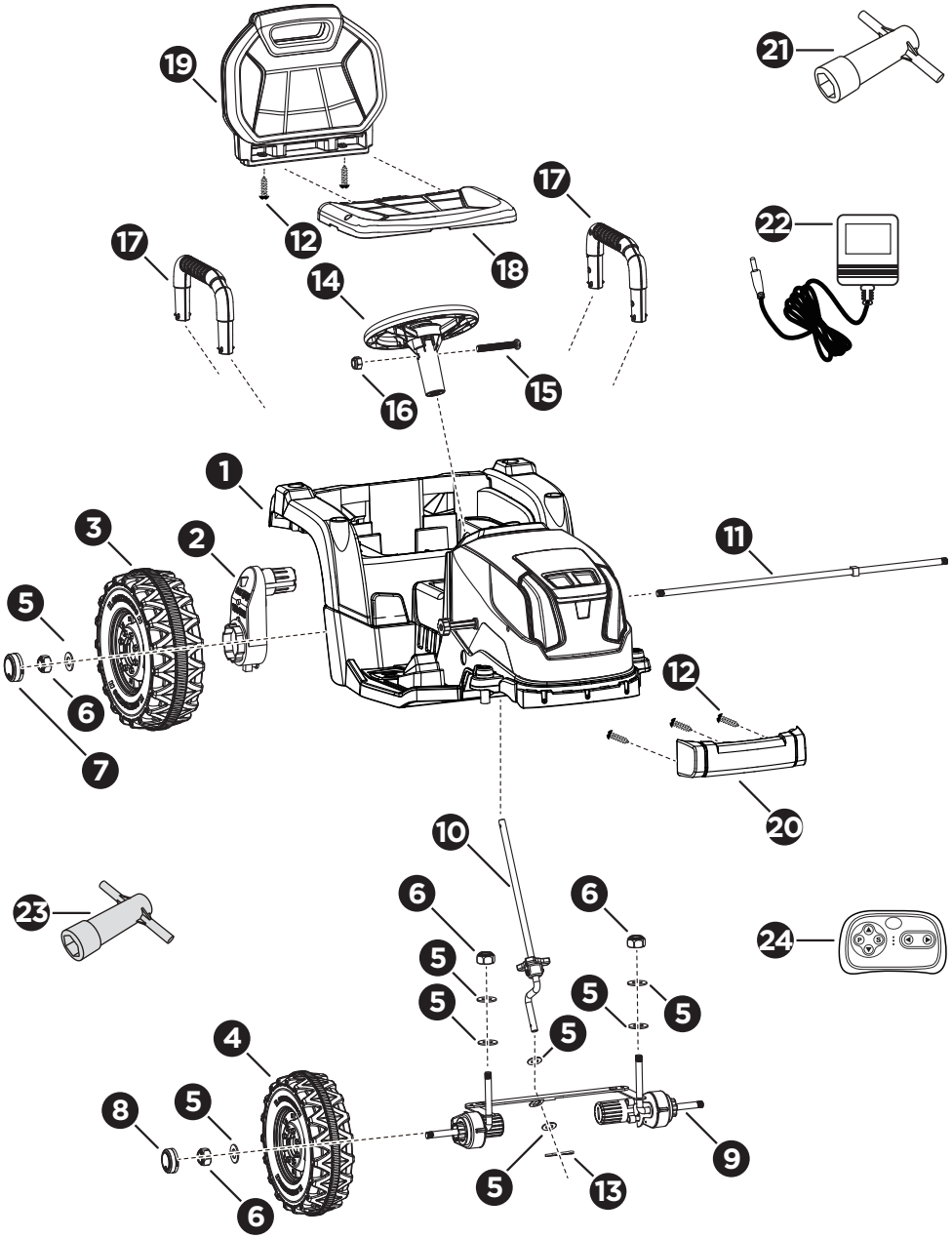

5 Parts Diagram

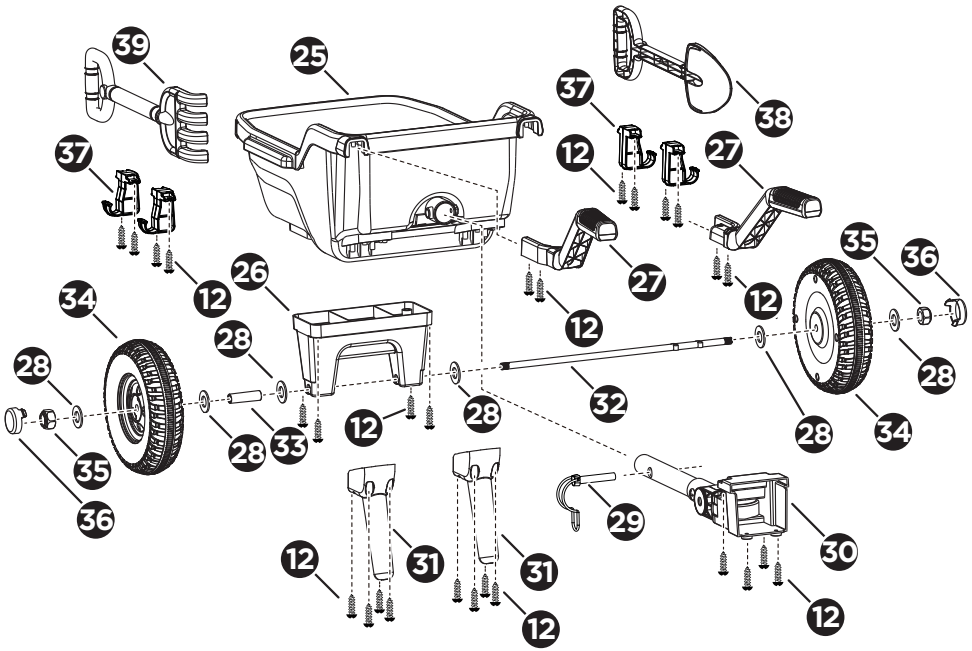

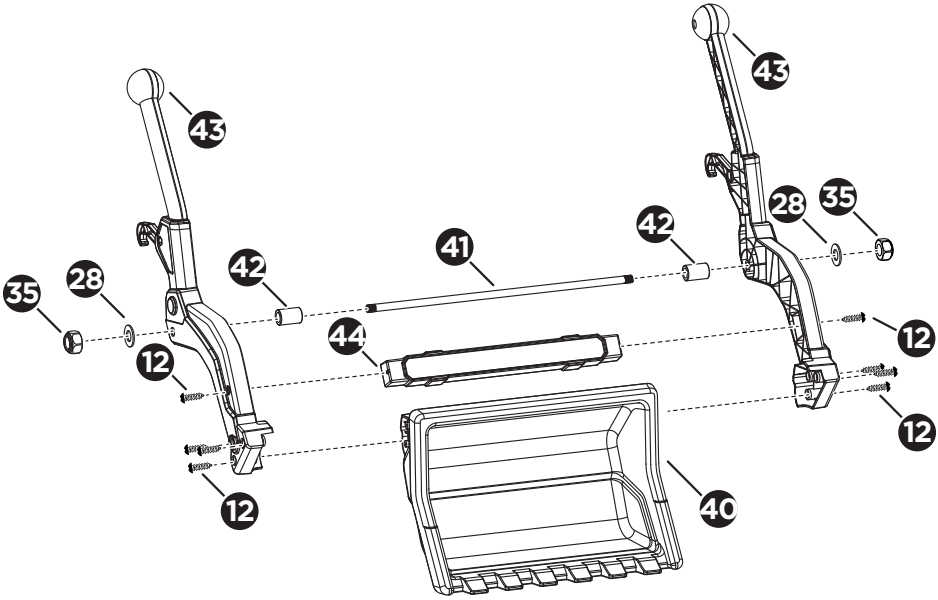

6 Parts List

Part No.	Part Name	Q'TY	Remark
1	Vehicle body	1	
2	Rear gear box	2	L and R
3	Rear wheel	2	
4	Front wheel	2	
5	M10 washer	10	Pre-assembled
6	M10 lock nut	6	Pre-assembled
7	Rear wheel hubcap	2	Placed in the assembly package
8	Front wheel hubcap	2	Placed in the assembly package
9	Front axle	1	
10	Steering column	1	
11	Rear axle	1	
12	#4x12 screw	41	Placed in the assembly package
13	Split pin	1	Placed in the assembly package
14	Steering wheel	1	
15	M5x30 machine screw	1	Pre-assembled
16	M5 lock nut	1	Pre-assembled
17	Arm rest	2	L and R
18	Seat cushion	1	
19	Seat back	1	
20	Front bumper	1	
21	M10 socket wrench	1	Placed in the assembly package
22	Charger	1	
23	M8 socket wrench	2	Placed in the assembly package
24	Remote control	1	
25	Trailer body	1	
26	Trailer axle holder	1	
27	Trailer handle	2	L and R
28	M8 wahser	8	Pre-assembled
29	Lock pin	1	Pre-assembled
30	Tow bar	1	
31	Trailer stand	2	
32	Trailer axle	1	

7 Parts List

Part No.	Part Name	Q'TY	Remark
33	Trailer bushing	1	Pre-assembled
34	Trailer wheel	2	
35	M8 lock nut	4	Pre-assembled
36	Trailer wheel hubcap	2	Placed in the assembly package
37	Tool hook	4	
38	Shovel	1	
39	Rake	1	
40	Bucket	1	
41	Bucket shaft	1	
42	Bucket bushing	2	Pre-assembled
43	Bucket arm	2	L and R
44	Bucket linkage	1	



Screwdriver (included)

Assembly Tools Not Included



Long nose pliers



2 x 1.5V
AAA batteries

8 Installation

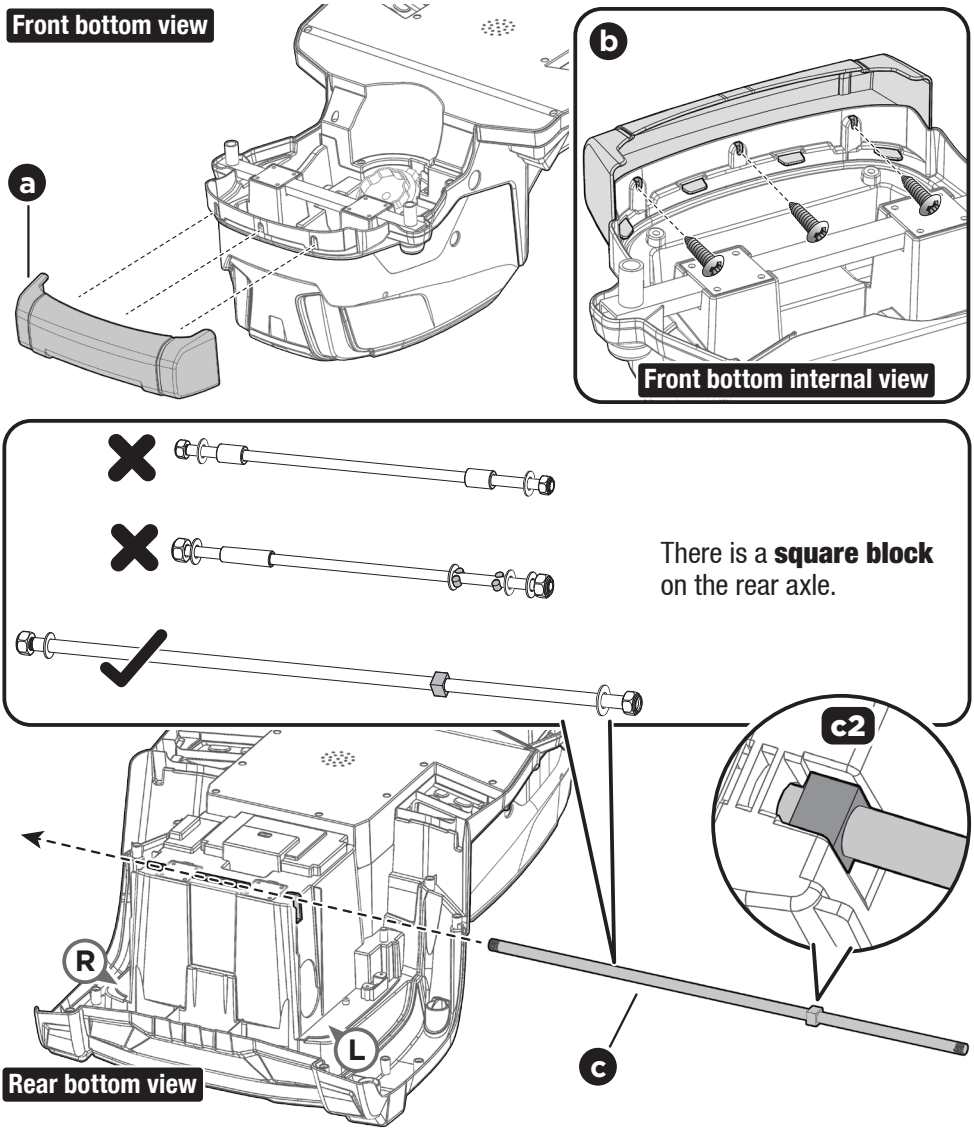

a. Turn the vehicle body downside up. Fit the tabs on the front bumper into the holes on the front side of the body.

b. Insert three #4x12 screws and tighten with a screwdriver as shown.

c. Locate the correct rear axle and remove all parts from it with the included M10 socket wrenches. Insert the longer axle end through the body's rear hole from the "L"-marked side, push until its square block fits into the square hole on the body (fig c2).

9 Installation

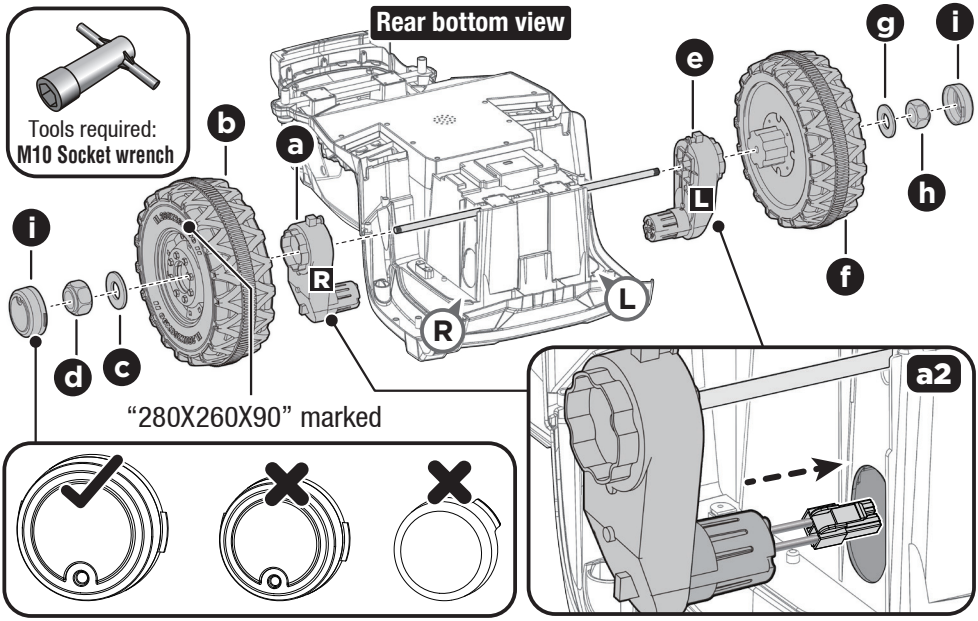

a. Slide the gear box onto the rear axle (**R to R, L to L.** Fit the "R"-labelled gear box to the "R"-marked side of the body, and the "L"-labelled gear box to the "L"-marked side). Insert the gear box connector through the larger hole on the vehicle body (Fig a2).

b. Fit the driving wheel (“280x260x90” marked, gear side first) onto the rear axle. Make sure the gear section on the wheel matches up with the gear box.

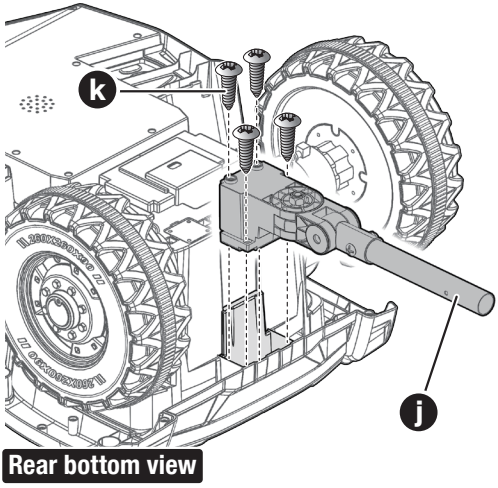

c. Fit a M10 washer onto the rear axle.

d. Tighten a M10 lock nut to the end of the rear axle with the included M10 socket wrench.

e-h. Repeat steps < a-d > to assemble the other rear wheel.

i. Snap the correct rear wheel hubcaps to the wheels.

j. Fit the tow bar to the rear side of the vehicle body.

k. Insert four #4x12 screws and tighten with a screwdriver.

10 Installation

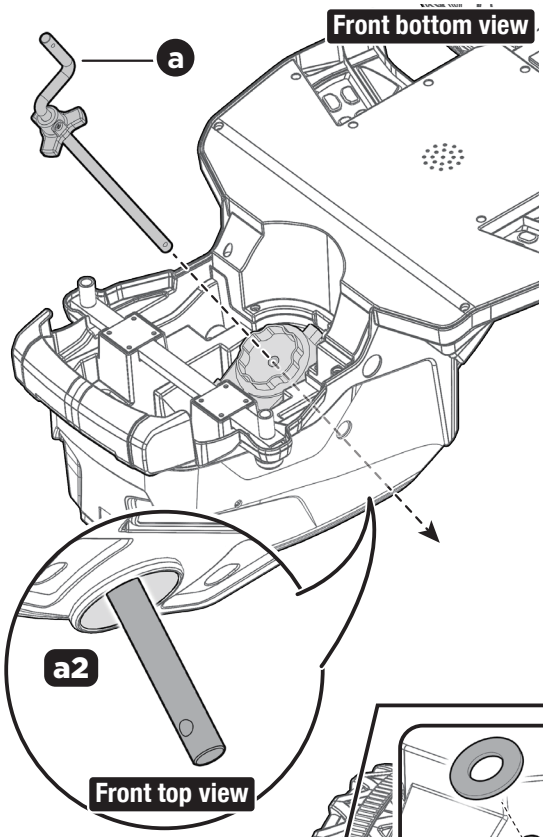

a. Insert the straight end of the steering column into the hole on the RC motor, push until it passes through the dashboard hole (fig a2). Ensure the RC driver on the steering column is fully aligned with the RC motor on the body.

b. Slide a M10 washer onto the bent end of the steering column.

c. Slide a M10 washer onto each front axle support (Fig c1). Fit the front axle to the body.

d. Insert the bent end of the steering column into the steering linkage hole. Fit a M10 washer, and insert the split pin through the hole on its bent end. Bend both ends of the split pins back using a long nose pliers (not included).

e. Fit a M10 washer to the front axle support. Tighten a M10 lock nut to the each end of front axle support with the included socket wrench.

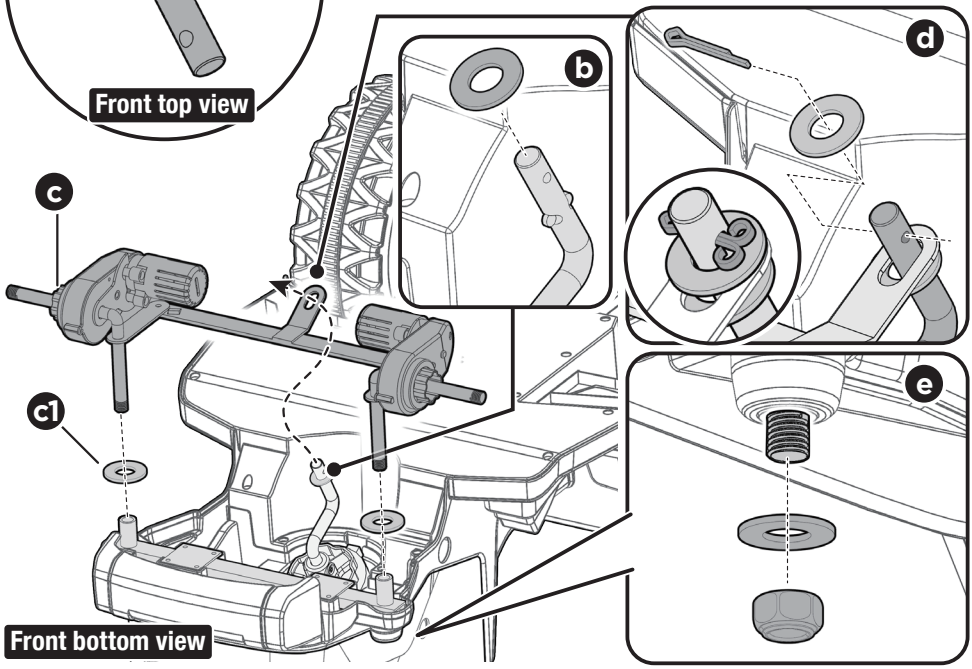

11 Installation

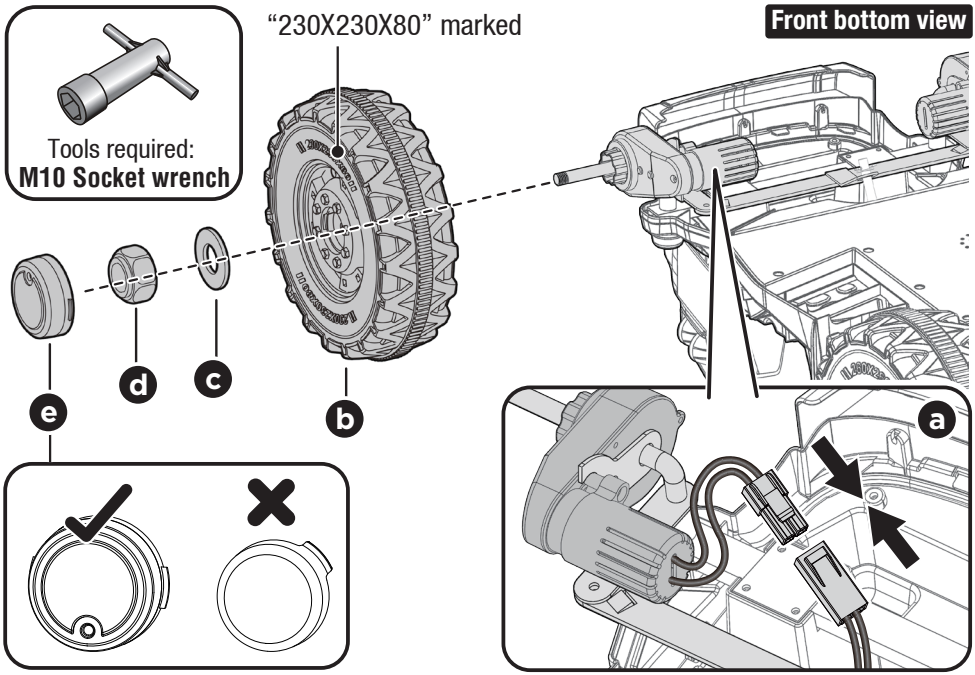

a. Plug the connector on the front gear box to the connector on the front of the vehicle.

b. Fit a front wheel (“230x230x80” marked, gear side first) onto the front axle.

c. Slide a M10 washer onto the front axle.

d. Tighten a M10 locknut to the end of the front axle with the included socket wrench.

e. “Snap” the front wheel hubcap to the wheel.

Repeat the steps a-e to assemble the other front wheel.

12 Installation

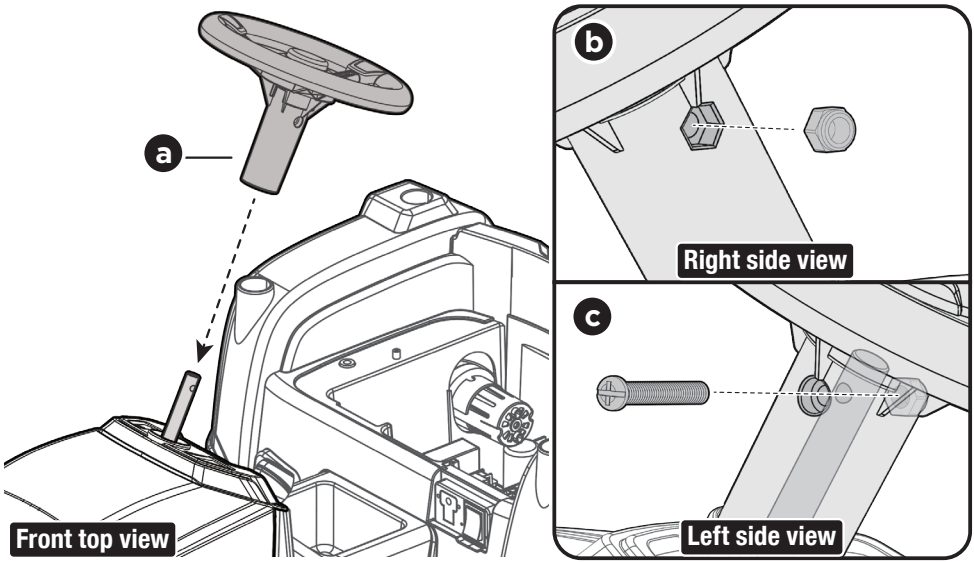

Remove the M5x30 machine screw and M5 lock nut from the steering wheel. Turn the vehicle body upright.

a. Place the steering wheel over the the steering column, protruding from the middle of the steering wheel base.

b. Insert the M5 lock nut into the slot on the right side of the steering wheel.

c. Align the holes on each side of steering wheel with the holes at the end of the steering column. Tighten the M5x30 machine screw to the steering wheel on the opposite side to secure the steering wheel to the steering column.

d. Fit the arm rests (screw hole side inward) to the vehicle body.

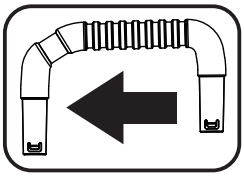

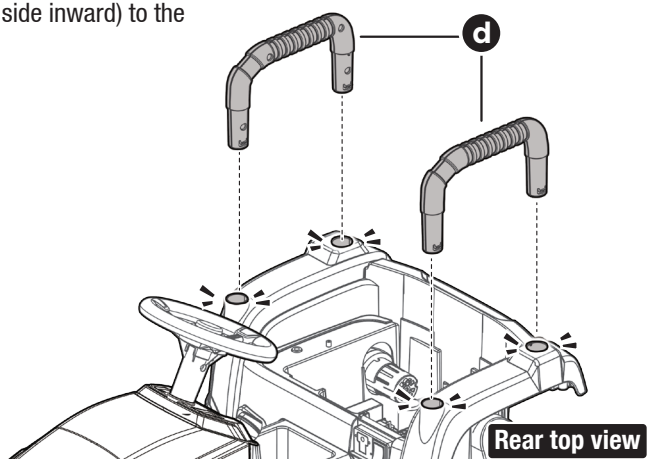

13 Installation

a. Fit the seat cushion to the seat back.

b. Insert two #4x12 screws and tighten with a screwdriver.

c. Plug the red vehicle connector into the red connector on the battery.

d. Plug the white connectors into each other on both sides.

e. Fit the tabs on the seat back into the holes on the body.

f. Use a screwdriver to tighten the two M5x16 screws on the both sides of the seat into the holes in the vehicle body.

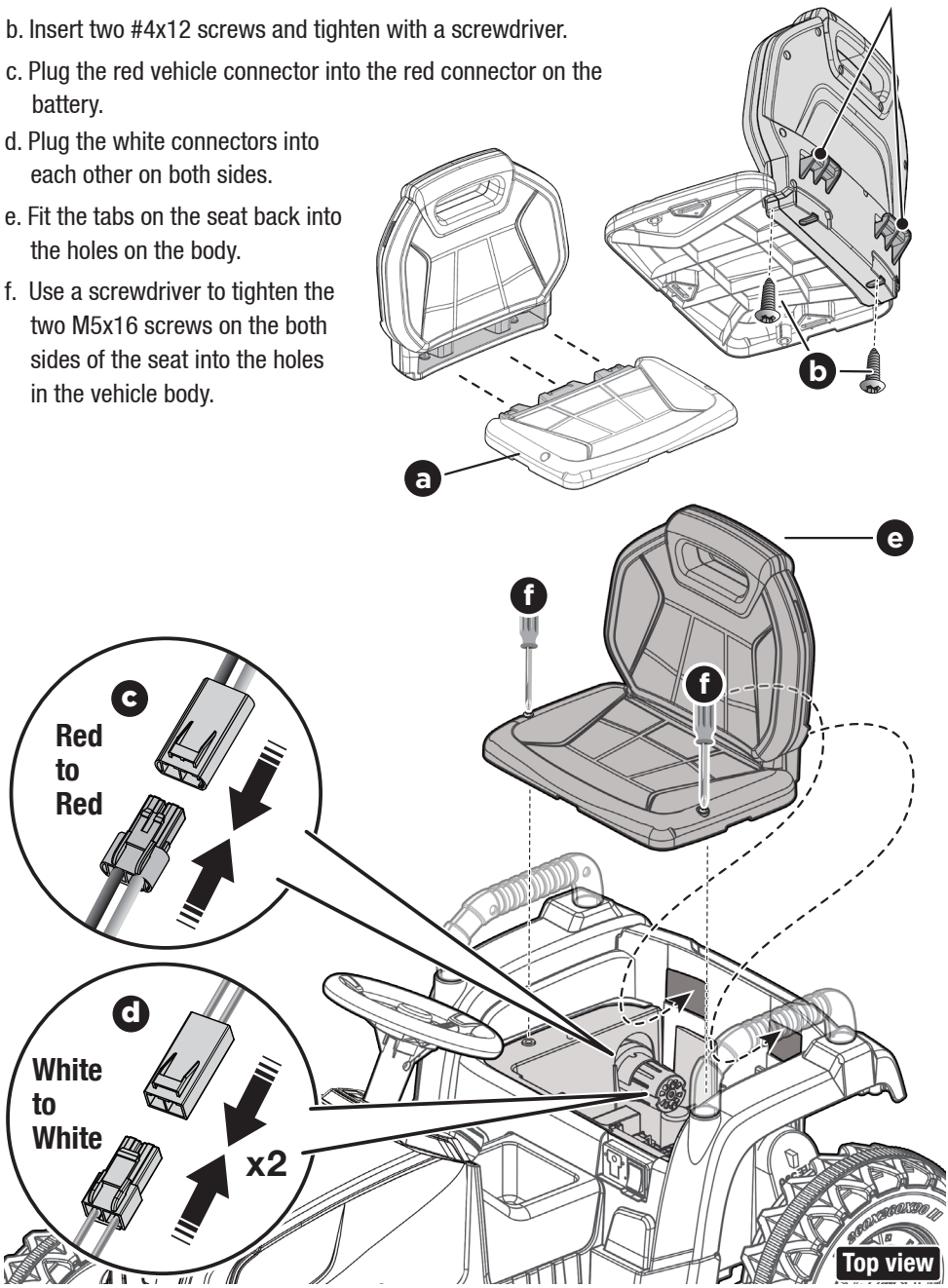

14 Installation

a. Fit the bucket linkage to the bucket arm. Insert a #4x12 screw and tighten with a screwdriver (a2).

b. Fit the bucket to the bucket arm. Insert three #4x12 screws and tighten with a screwdriver (b2).

c. Fit the other bucket arm to the bucket linkage and bucket.

c2. Insert a #4x12 screw through the bucket arm and into the bucket linkage, and tighten with a screwdriver.

c3. Insert three #4x12 screws through the bucket arm and into the bucket, and tighten with a screwdriver.

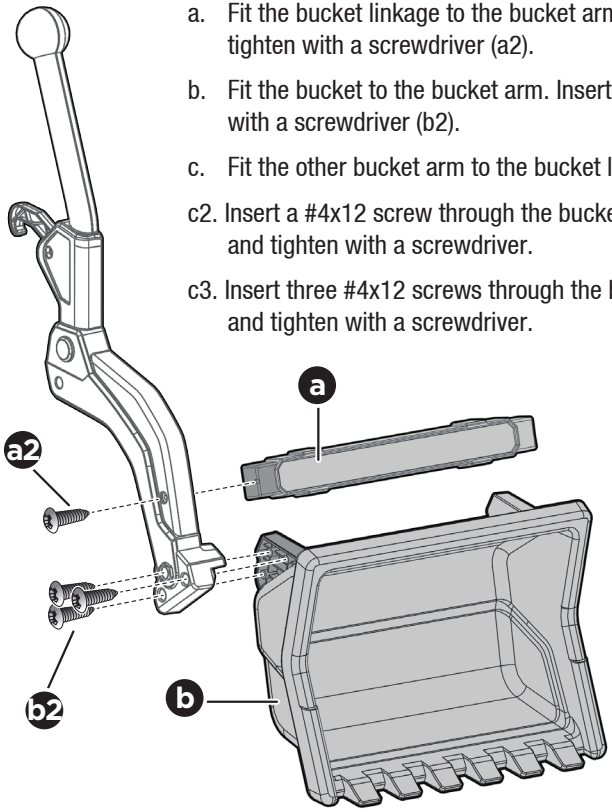

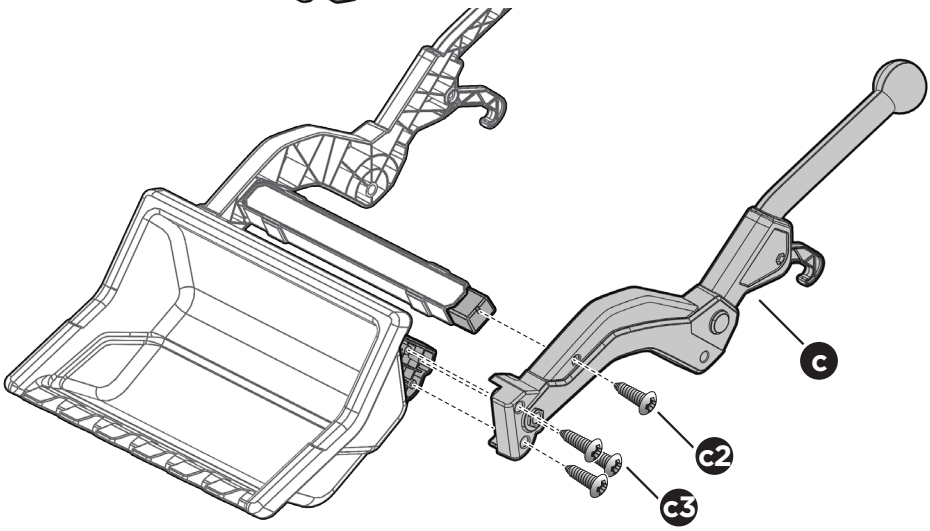

15 Installation

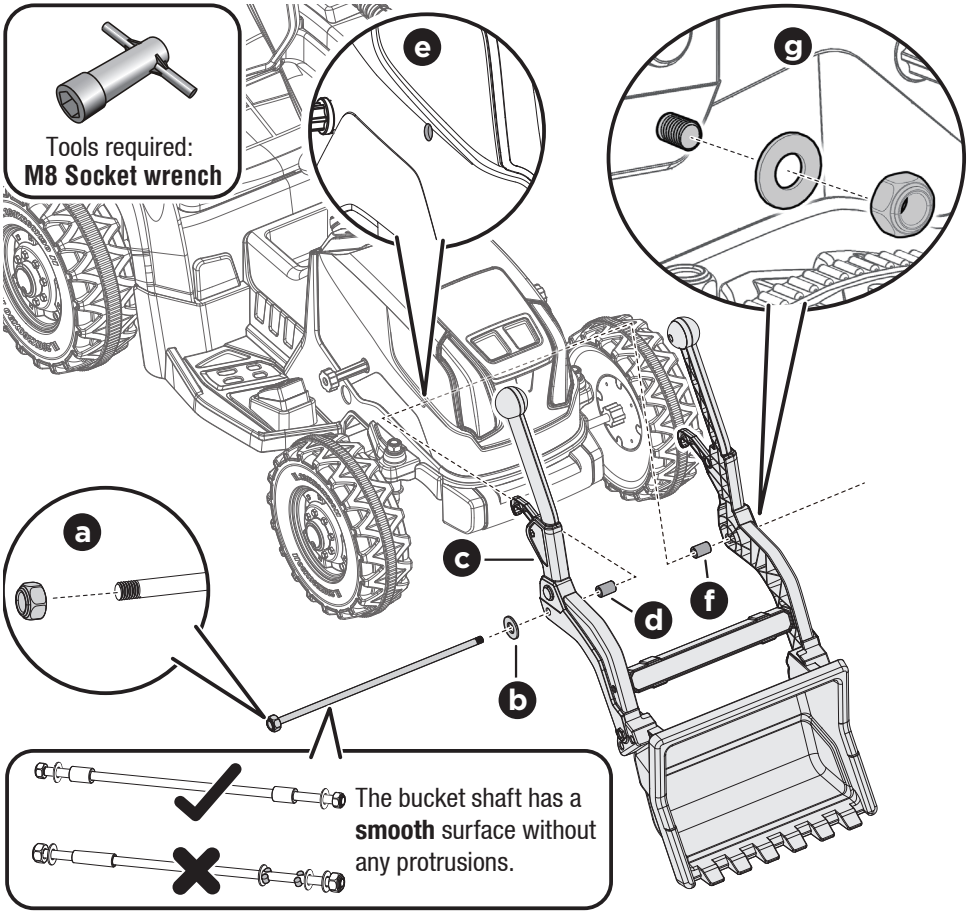

a. Find the correct bucket shaft and remove all parts from it. Tighten a M8 lock nut onto one end of the bucket shaft.

b. Slide a M8 washer onto the bucket shaft from the other end.

c. Insert the bucket shaft through the hole on one side of the bucket arm.

d. Slide a bucket bushing onto the bucket shaft.

e. Push the bucket shaft through the hole at the front of the vehicle.

f. Slide another bucket bushing onto the bucket shaft.

g. Continue pushing the bucket shaft until it passes through the hole on the other bucket arm. Slide a M8 washer onto the bucket shaft, then tighten a M8 lock nut to the end of the bucket shaft. **HINT:** An extra M8 socket wrench is provided to hold the lock nut on one side while tightening the lock nut on the opposite side of the bucket shaft.

16 Installation

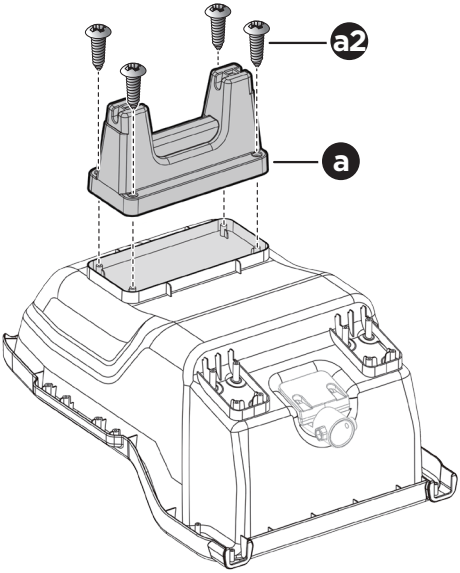

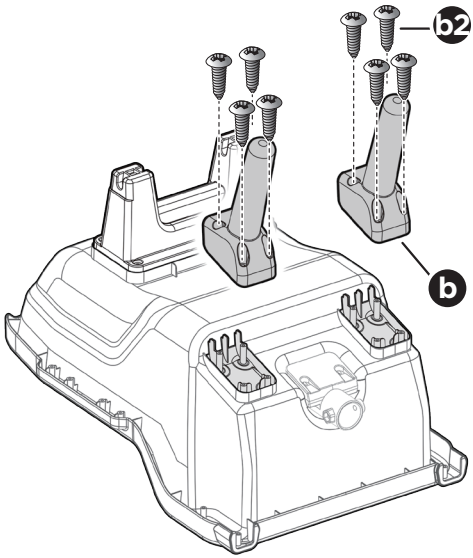

Turn the trailer body downside up.

a. Fit the trailer axle holder to the trailer body, insert four #4x12 screws and tighten with a screwdriver (a2).

b. Fit a trailer stand to the trailer body, insert four #4x12 screws and tighten with a screwdriver (b2). Repeat for the other trailer stand.

c. Fit a trailer handle to the traielr body, If the trailer handle does not seem to fit, change the other one and try again. Insert two #4x12 screws and tighten with a screwdriver (c2). Repeat for the other trailer handle.

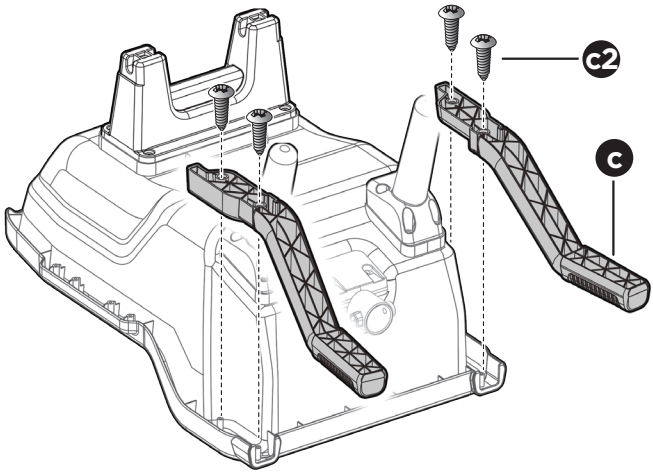

17 Installation

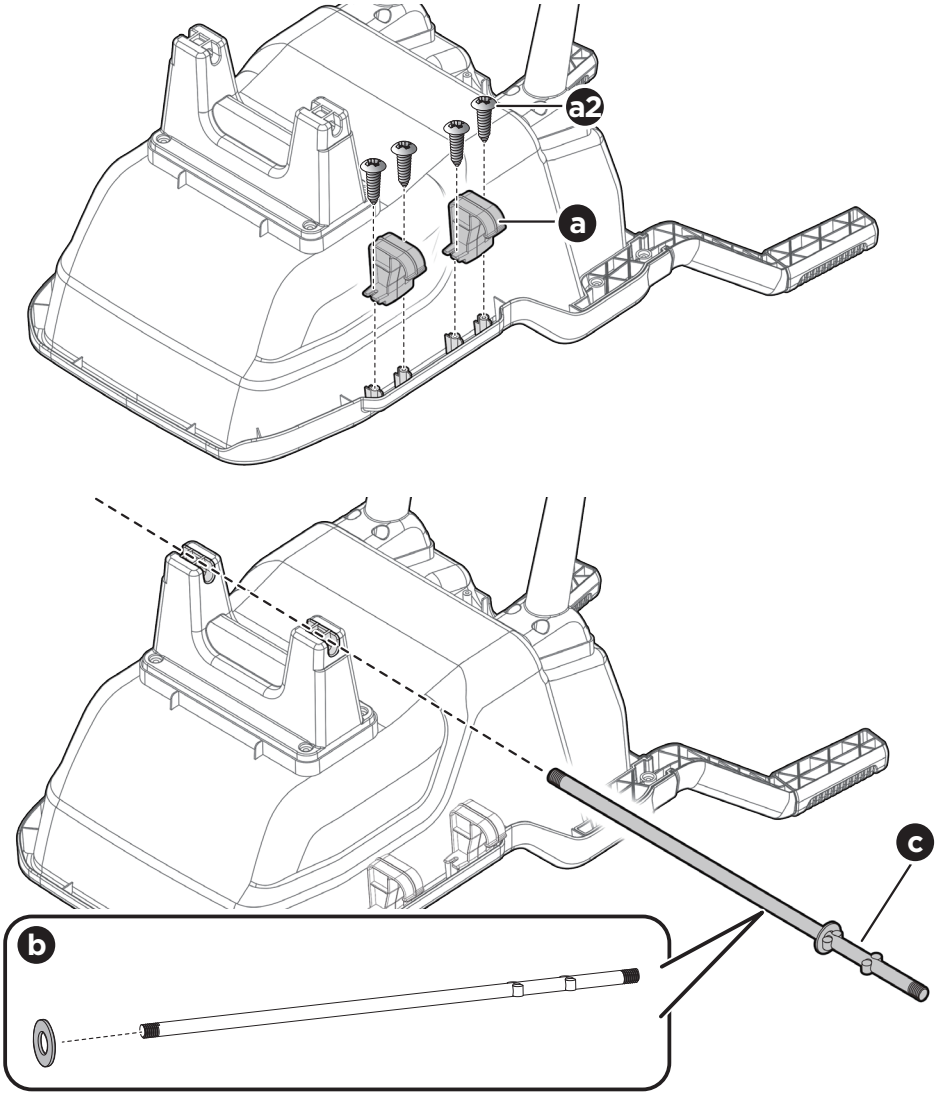

a. Flt the tool hook to the trailer body, insert two #4x12 screws and tighten with a screwdriver (a2). Repeat for the other three tool hooks.

b. Remove all parts from the trailer axle with the included M8 socket wrenches. Slide a M8 washer onto the longer end of the trailer axle.

c. Insert the trailer axle through the holes on the trailer axle holder.

18 Installation

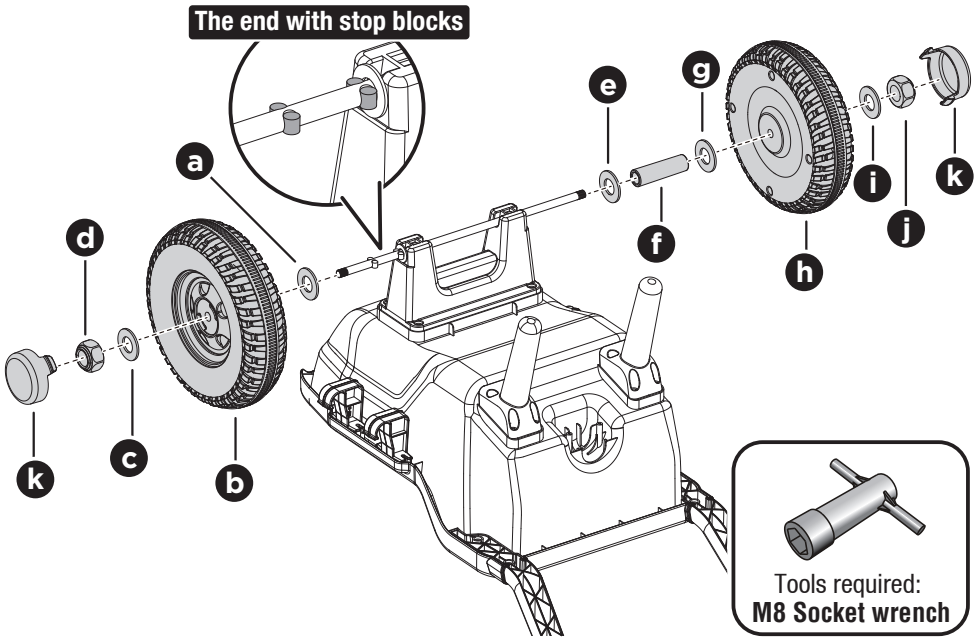

a. Slide a M8 washer onto the trailer axle from the end with **stop blocks**.

b. Slide a trailer wheel (smooth side first, hub side out) onto the trailer axle.

c. Slide a M8 washer onto the trailer axle.

d. Tighten a M8 lock nut to the end of the trailer axle with the included M8 socket wrench.

e. Slide a M8 washer onto the other side of the trailer axle.

f. Slide a trailer bushing onto the trailer axle.

g. Slide a M8 washer onto the trailer axle.

h. Slide a trailer wheel (smooth side first, hub side out) onto the trailer axle.

i. Slide a M8 washer onto the trailer axle.

j. Tighten a M8 lock nut to the end of the trailer axle with the included M8 socket wrench.

HINT: An extra M8 socket wrench is provided to hold the lock nut on one side while tightening the lock nut on the opposite side of the trailer axle.

k. Snap the trailer wheel hubcaps to the trailer wheels.

19 Installation

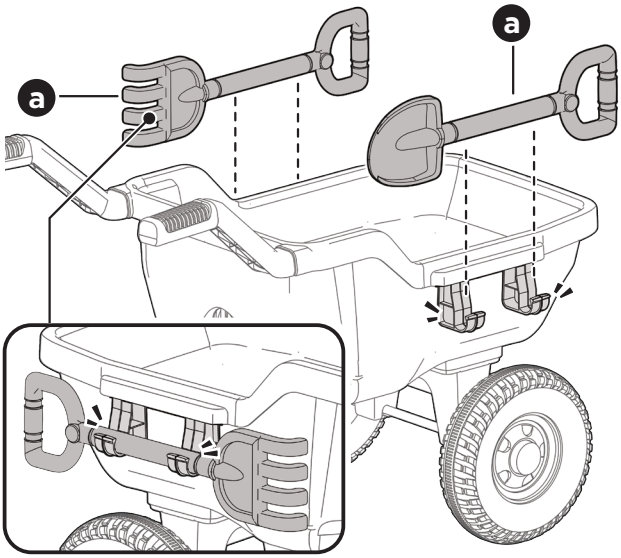

a. Turn the trailer body upright. Fit the shovel and rake to the tool hooks on the trailer body.

b. Fit the trailer assembly to the tow bar on the vehicle body.

c. Insert the lock pin through one side hole of the tow bar bracket, the tow bar hole, and out the opposite side.

d. Firmly rotate the lock spring as shown to secure the tow bar.

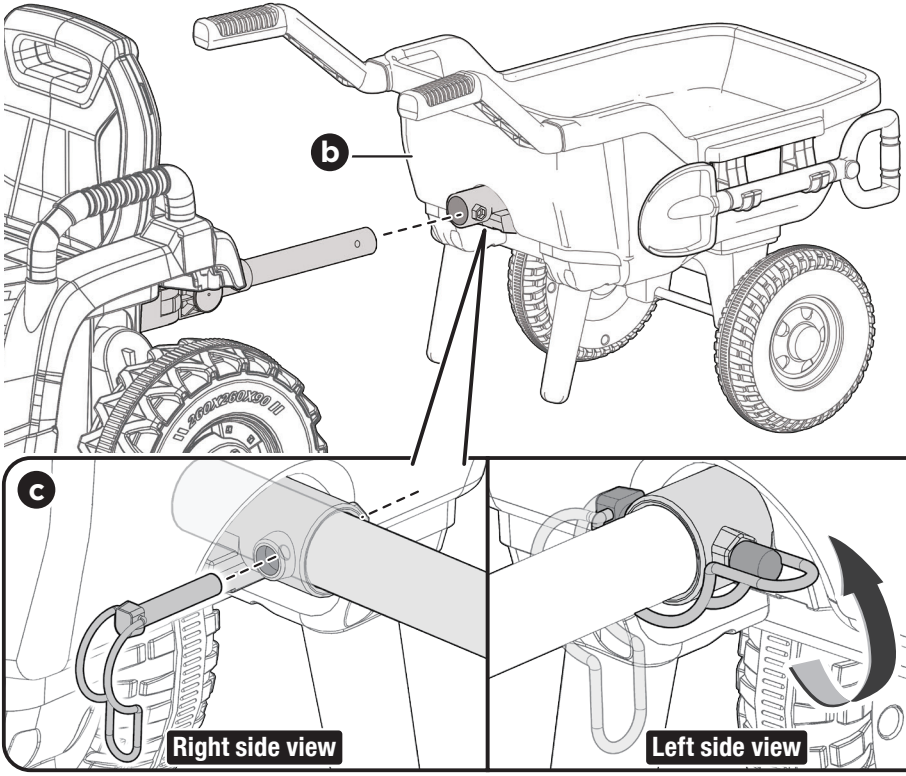

Ride-on Operation

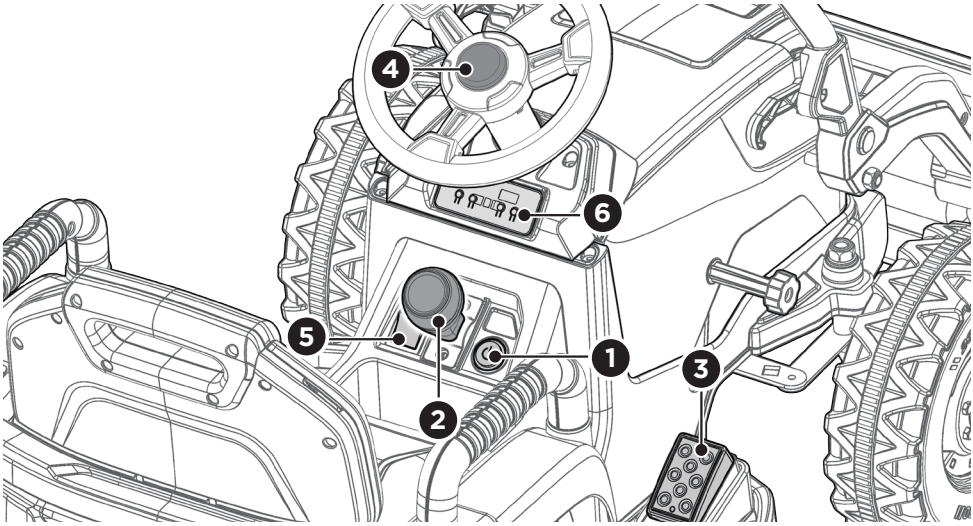

1. **Power button:** Turn the product on and off.
2. **Forward/reverse lever:** Change the direction that product moves from forward to reverse.
   - To move the product forward, shift the lever to the upper position.
   - To move the product backward, shift the lever to the lower position.

   IMPORTANT: Always stop vehicle when changing the speed or direction to avoid damage the gears and motor.
3. **Foot pedal:** Applies power (speed) to the product.
   - To move the product, press the pedal down.
   - To brake or slow down, release pressure from the pedal.
4. **Air horn:** Press for horn sound playing.
5. **High/Low speed switch:**
   - Toggle the switch to 'high' position, the product will move in high speed.
   - Toggle the switch to 'low' position, the product will move in low speed.
6. **Audio player:**

   The player will automatically turn off after 30 minutes of inactivity.
   - **Battery indicator:** The green indicator means the battery has sufficient power. The **red** indicator means the battery needs **charging**.

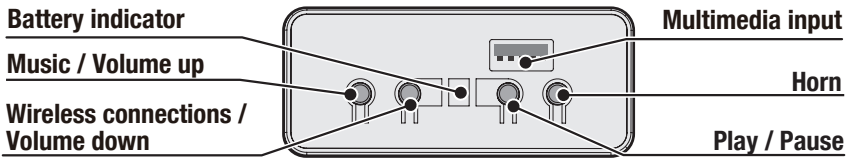

21 Remote Control Operation

- **The remote control has precedence over foot pedal operation. The foot pedal won't work while you operate the Remote Control.**
- **The remote control should only be used by adults.**

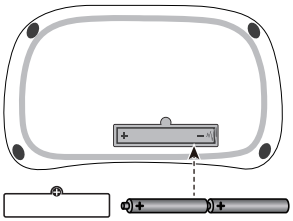

Attach the batteries

Remove the battery cover on the back of the remote control, and insert 2x1.5V AAA batteries in their correct polarities.

Batteries not included. Refer to the Battery Information on page 3.

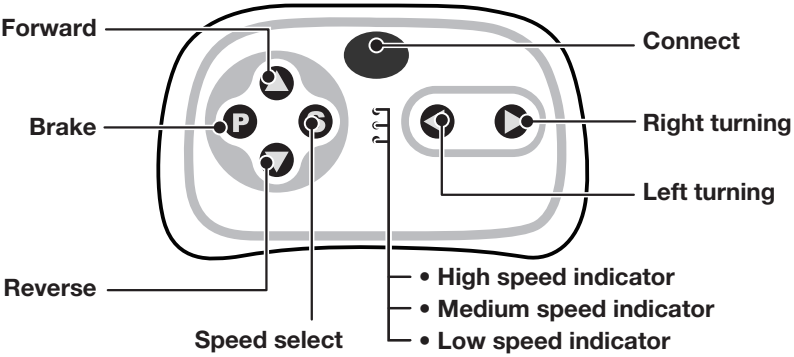

Brake button

- Press the button to stop the ride-on, the speed indicators go to flash.
- **Press it again to release the brake,** and the speed indicators go to long bright.

Speed select button

This button switches the vehicle between low, medium and high speed modes.

22 Remote Control Operation



The remote control works normally after battery installation, as it is pre-paired with the product at the factory. If the remote control **loses connection** with the product, follow the steps below to re-pair them.

A. Power off the ride-on vehicle .

B. Press and hold the connect button on the remote control for 3 seconds. The low-speed indicator flashes to enter pairing standby state, then power on the ride-on vehicle:

✓ **Pairing Success:** The low-speed indicator turns steadily on.

✖ **Pairing Failure:** If the low-speed indicator does not respond and keeps flashing, the pairing has failed. Power off the ride-on vehicle and remove the batteries from the remote control, then try again.

NOTE:

- The remote control automatically powers off after approximately 10 seconds of inactivity.
- Re-pairing may be required after replacing the remote control batteries.

23 Charging

⚠ WARNING!

- **ONLY an adult is allowed charge and recharge the battery!**
- **This charging protection will cut all all the functions of the vehicle when charging.**
- Use only battery(ies) and charger specified by the manufacturer. Using another battery or charger may cause a fire or explosion. Do not use the battery or charger for any other product.
- Damage to the battery may occur if it is completely drained.
- Charge the battery for about 8 - 12 hours. Do not charge the battery for more than 20 hours.
- Charge the battery at least once a month even if not operating the vehicle for a long time to maximize the battery life.
- Do not charge or store the battery upside down.
- Keep the charger and battery away from flames, sparks, or any flammables.

- The vehicle must be OFF when charging.
- When the vehicle begins to run slowly, recharge the battery.
- When the product is stationary, the power indicator will tell you how much power is remaining in the battery. If only one indicator light remains, please recharge the battery.

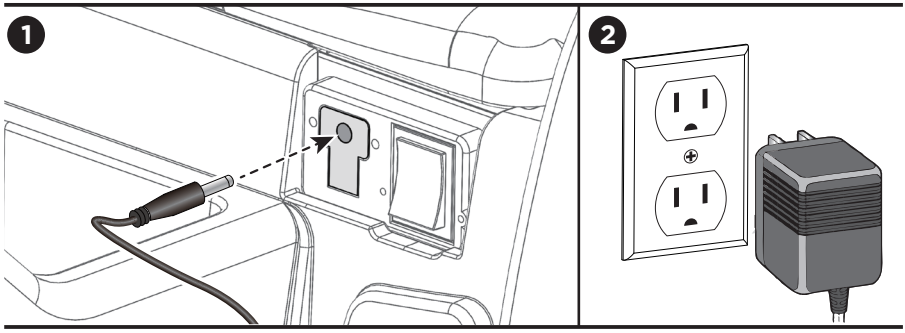

1. Plug the charger port into the input socket (below the seat).
2. Plug the charger plug into a wall outlet. The battery will begin charging.

24 Battery Disposal




The battery will eventually lose the ability to hold a charge. Depending on the amount of use, and varying conditions, the battery should operate for one to three years.

Important! Recycle the dead battery responsibly. the battery contain several hazardous materials, aswell as organic solvents and electrolytes. If discarded battery are not properly recycled, these materials can leak into theenvironment, causing soil and water pollution. Follow these guidelines for disposing of used battery:

- Check Local Rules: Follow local waste management regulations.
- Discharge Fully: Ensure the battery is fully discharged.
- Secure Terminals: Tape over the battery contacts to prevent shorts.
- Find Recycling Programs: Use community recycling centers or retailer take-back programs.
- Avoid Regular Trash: Never put batteries in general waste.
- Store Safely: Keep batteries in a secure, dry place until disposal.
- Choose Reputable Recyclers: Ensure recyclers follow proper environmental standards.

Fuse

The battery features a thermal fuse with a rest fuse that will automatically trip and cut all power to the vehicle if the motor, electric system or battery is overloaded. The fuse will reset and power will be restored after the unit is turned OFF for 20 seconds and then turned ON again. If the thermal fuse trips repeatedly during normal use, the vehicle may need repair. **Contact your distributor please.**

To avoid losing power, follow these guidelines:

- Do not overload the vehicle.
- Do not tow anything behind the vehicle.
- Do not drive up steep slopes.
- Do not drive into fixed objects, which may cause the wheels to spin, causing the motor to overheat.
- Do not drive in very hot weather, components may overheat.
- Do not allow water or other liquids to come in contact with the battery or other electric components.
- Do not tamper with the electric system. Doing so may create a short, causing the fuse to trip.

⚠ **RISK OF FIRE. Do not bypass. Replace only with a new fuse.**

25 Troubleshooting Guide

Problem	Possible Cause	Solution
Vehicle does not run	Battery low on power	Recharge battery.
	Thermal fuse has tripped	Reset fuse, see <Fuse>
	Battery connector or wires are loose	Check that the battery connectors are firmly plugged into each other. If wires are loose around the motor contact your distributor please.
	Battery is dead	Replace battery, contact your distributor please.
	Electrical system is damaged	Contact your distributor please.
	Motor is damaged	Contact your distributor please.
Vehicle does not run very long	Battery is under charged	Check that the battery connectors are firmly plugged into each other when recharging
	Battery is old	Replace battery, contact your distributor please.
Vehicle runs sluggishly	Battery low on power	Recharge battery, contact your distributor please.
	Battery is old	Replace battery, contact your distributor please.
	Vehicle is overload	Reduce weight on vehicle.
	Vehicle is being used in harsh conditions	Avoid using vehicle in harsh conditions, see <User Notice>.
Vehicle needs a push to go forward	Poor contact of wires or connectors	Check that the battery connectors are firmly plugged into each other. If wires are loose around the motor, contact your distributor please.
	"Dead Spot" on motor	A dead spot means the electric power is not being delivered to the terminal connection and the vehicle needs repair. Contact your distributor please.
Difficult shifting from forward to reverse or vice-versa	Attempting to shift while the vehicle is motion	Completely stop the vehicle and shift, see <Use>
Loud grinding or clicking noises coming from motor or gear box	Motor or gears are damaged	Contact your distributor please.
Battery will not recharge	Battery connector or adapter connector is loose	Check that the battery connectors are firmly plugged into each other.
	Charger not plugged in	Check that the battery charger is plugged into a working wall outlet.
	Charger is not working	Contact your distributor please.
Charger feels warm when recharging	This is normal and not a cause for concern	

Completely read through this manual and the troubleshooting guide table before calling. If you still need help resolving the problem **Contact your distributor please.**

26 Maintaining

- It is parents' responsibility to check main parts of the toy before using, Must regularly examine for potential hazard, such as the battery, charge, cable or cord, plug, screws are fastening enclosure of other parts and that in the event of such damage, the toy must not be used until that damage had been properly removed.
- Park the vehicle indoors or cover it with a tarp to protect it from wet weather.
- Recharge the battery after each use. Only an adult can handle the battery. Recharge the battery at least once a month when the vehicle raider is not being used.
- Do not wash the vehicle with a hose. Do not wash the vehicle with soap and water. Do not drive the vehicle in rainy or snowy weather. Water will damage the motor, electric system and battery.
- Clean the vehicle with a soft, dry cloth. To restore shine to plastic parts, use a non-wax furniture polish. Do not use car wax. Do not use abrasive cleaners.
- When not using, all the electrical source should be turn off. Turn off the power switch and disconnect the battery connection.

Our products are suitable for
ASTM F963; GB6675; EN71 and EN62115 standard.