Instruction Manual

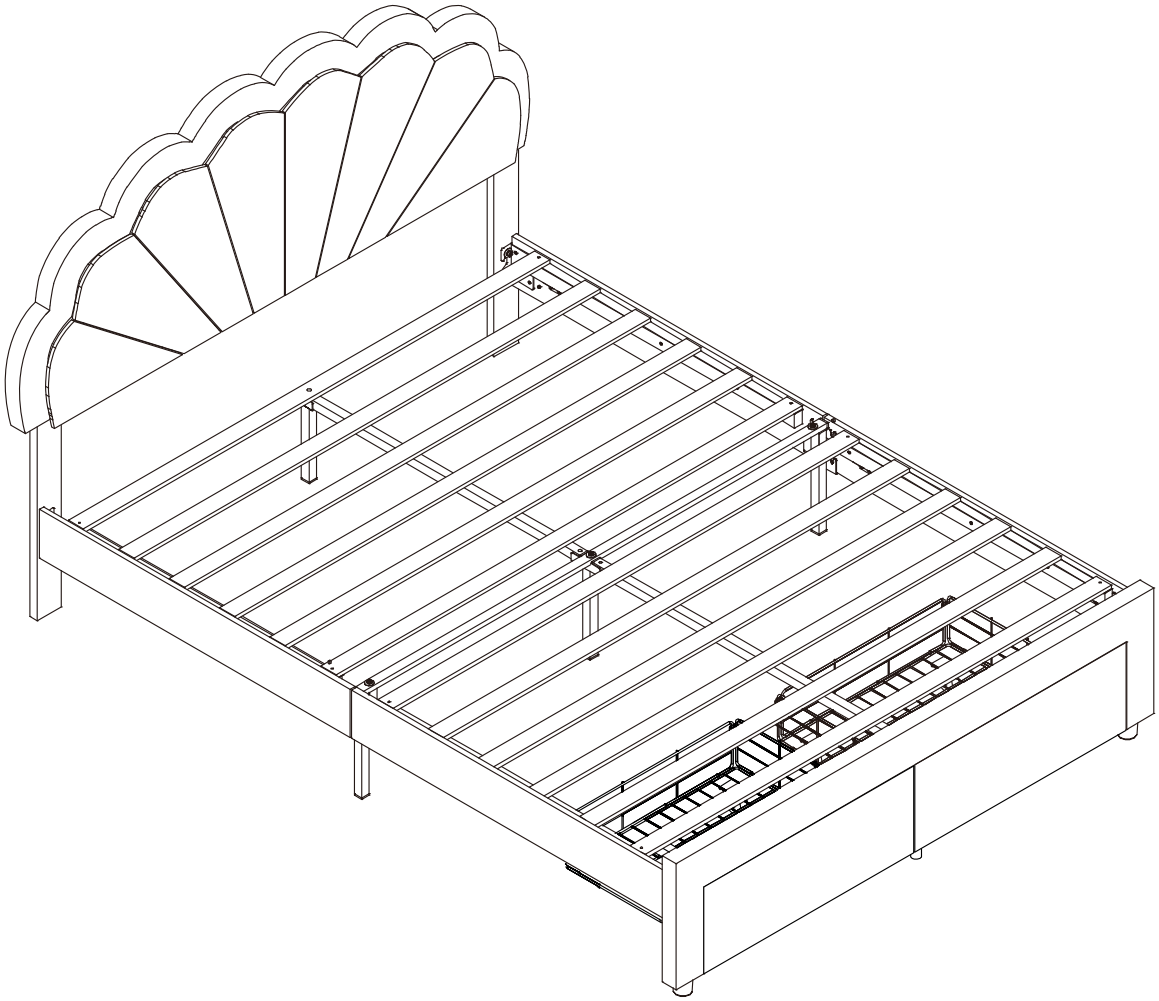

Bed Frame (Queen Size)

HFT-UP-105 / HFT-UP-108 V1.0

EN

Thank you for purchase on our products. Please contact us if you have difficulty with assembly or need replacement parts. Our customer service is here to assist you.
Please attach your User Name or Order ID so that we can assist you better.

WARNING

Serious or fatal injury may occur from unexpected assembly or use.

1. During the assembly process, keep all parts away from babies or children.
2. Use of tip-over restraints may only reduce, but not eliminate the risk of tip-over.
3. Unless specially designed to accommodate, do not set heavy objects on top of this product.
4. Place the heaviest items on the lowest shelf.
5. Never allow children to climb or bang on drawers, doors or shelves.

DE

Vielen Dank für Ihren Kauf von uns Produkten. Bitte kontaktieren Sie uns, wenn Sie Probleme mit Montage haben oder Ersatzteile benötigen. Wir Kundenservice ist für Sie da.
Bitte geben Sie Ihren Benutzernamen oder Ihre Bestellnummer an, damit wir Sie besser unterstützen können.

WARNUNG

Bei unerwarteter Montage oder Verwendung können schwere oder tödliche Verletzung auftreten.

1. Legen Sie in den Montageprozess alle Teile weg von Babys oder Kindern.
2. Die Verwendung von Kippsicherungen kann die Gefahr eines Kippens nur verringern, jedoch nicht beseitigen.
3. Setzen Sie bitte keine schweren Gegenstände auf dieses Produkt, es sei denn, dass das Produkt speziell für die Unterbringung konzipiert wird.
4. Legen Sie bitte die schwersten Gegenstände auf das unterste Regal.
5. Erlauben Sie nie Kindern, auf Schubladen, Türen oder Regale zu klettern oder zu knallen.

Parts List(EN) / Teile Liste(DE)

A Front Slat 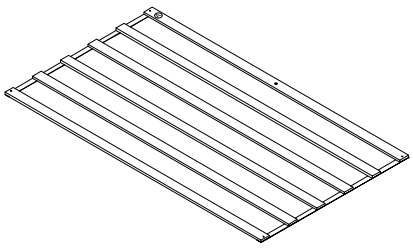 1PC	**B** Back Slat 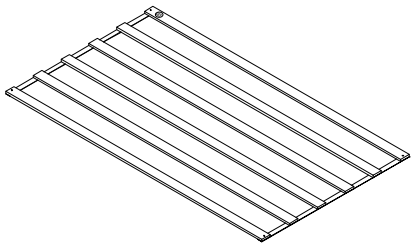 1PC	**C** Headboard 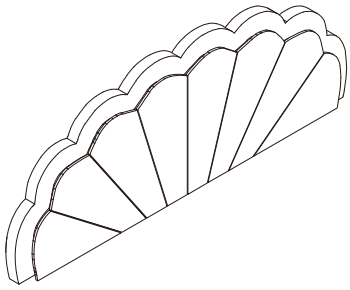 1PC
D Headboard side leg  2PCS	**E** Footboard 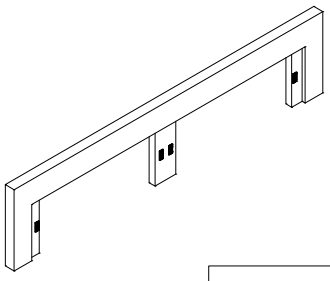 1PC	**F1** Left siderails 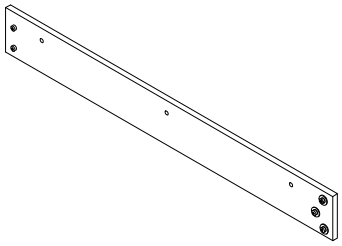 2PCS
F2 Right siderails 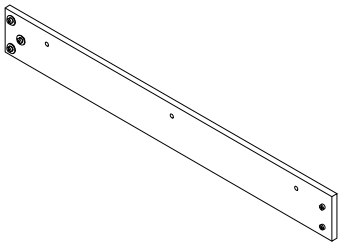 2PCS	**G** The brace 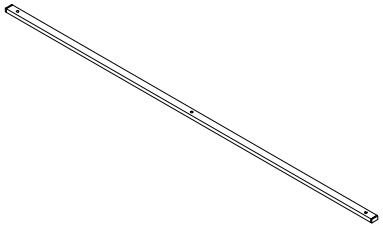 1PC	**H** Back Middle cross beam 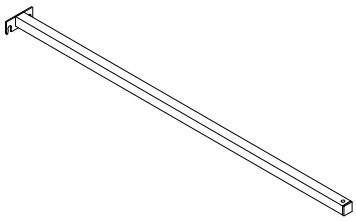 1PC
I Front Middle cross beam 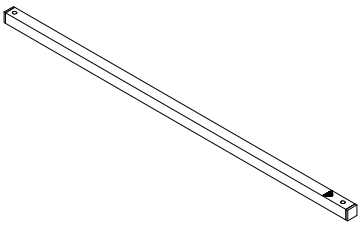 1PC	**J** Middle leg 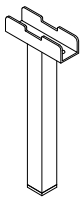 1PC	**K** Edge of the foot 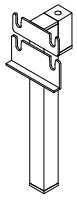 2PCS
L Front Leg 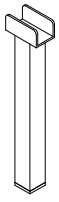 1PC	**M** Bed leg 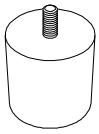 2PCS	**M1** Bed leg 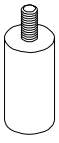 1PC

Parts List(EN) / Teile Liste(DE)

N Innerscrew 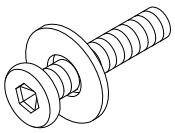 M8×45mm 10+1PCS	O Screw 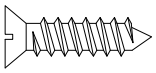 M3.5×25mm 8+1PCS	P Inner allen wrench 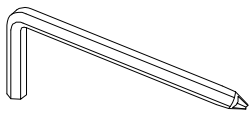 1PC
Q Drawer panel 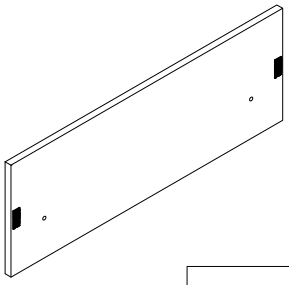 2PC	R Drawer 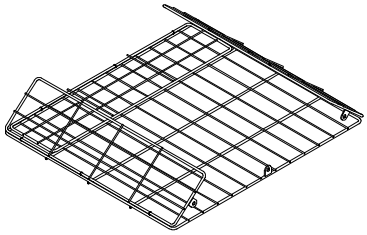 2PC	S Drawer wheel 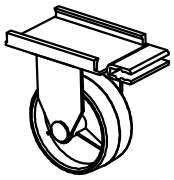 8PCS
T Drawer connector 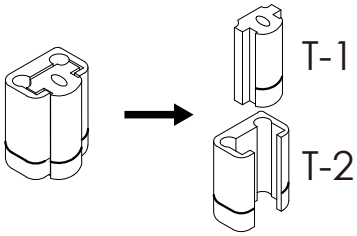 4PCS	Y Innerscrew 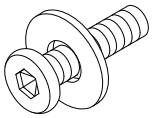 M8×38mm 12PCS	V Screw 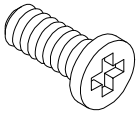 M6×15mm 6PCS
W Left Bracket 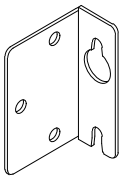 2PCS	X Right Bracket 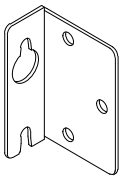 2PCS	Z Support Wood 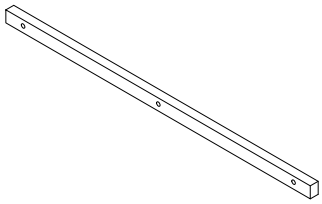 4PCS
W1 Controller 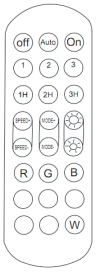 1PC	X1 Receiver 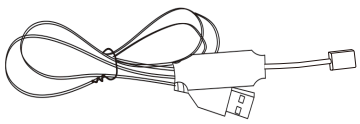 1PC	

Assembly Instruction of (Drawer)

STEP 1

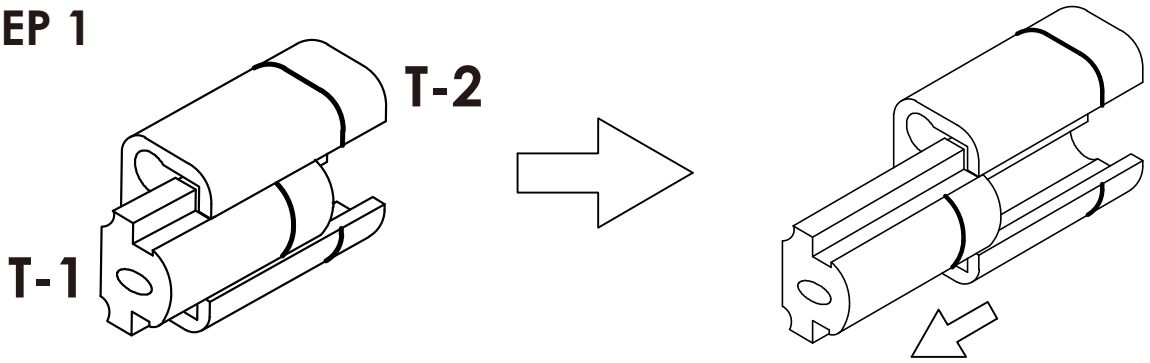

You can pull the buckle out by following the direction indicated by the arrow

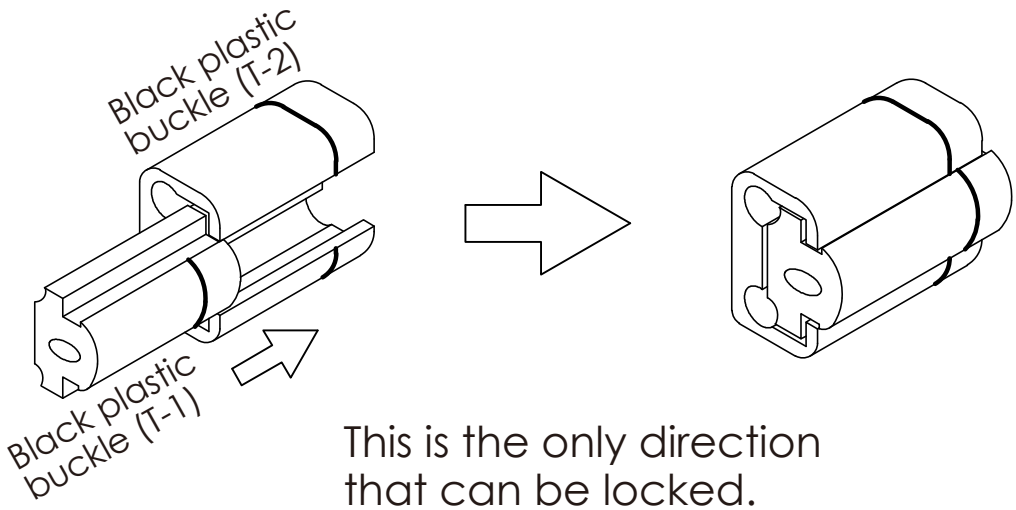

This is the only direction that can be locked.

STEP 2

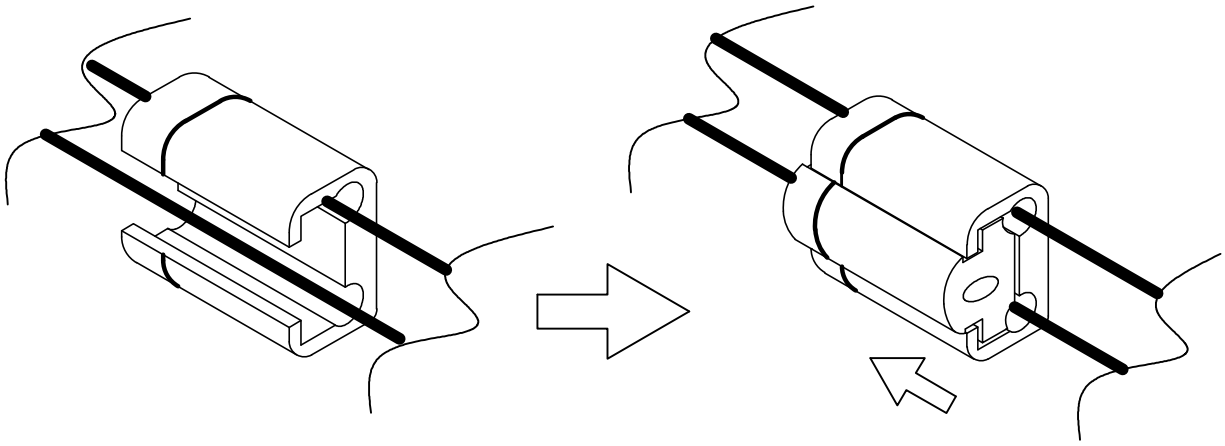

Place the round iron tubes as shown for better assembly of the drawers.

Assembly Steps(EN) / Montageschritte(DE)

STEP 3

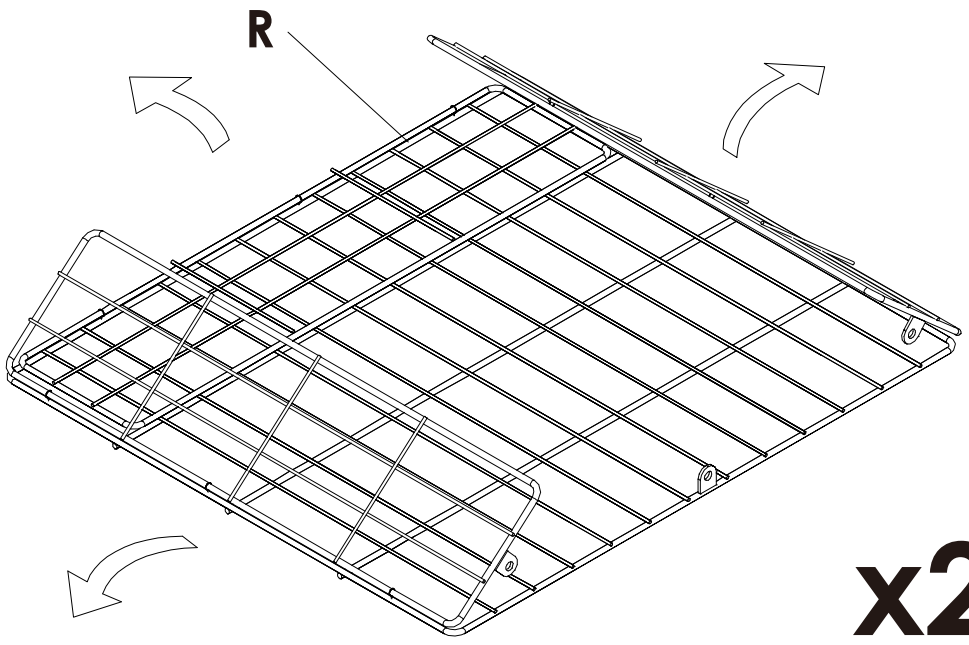

STEP 4

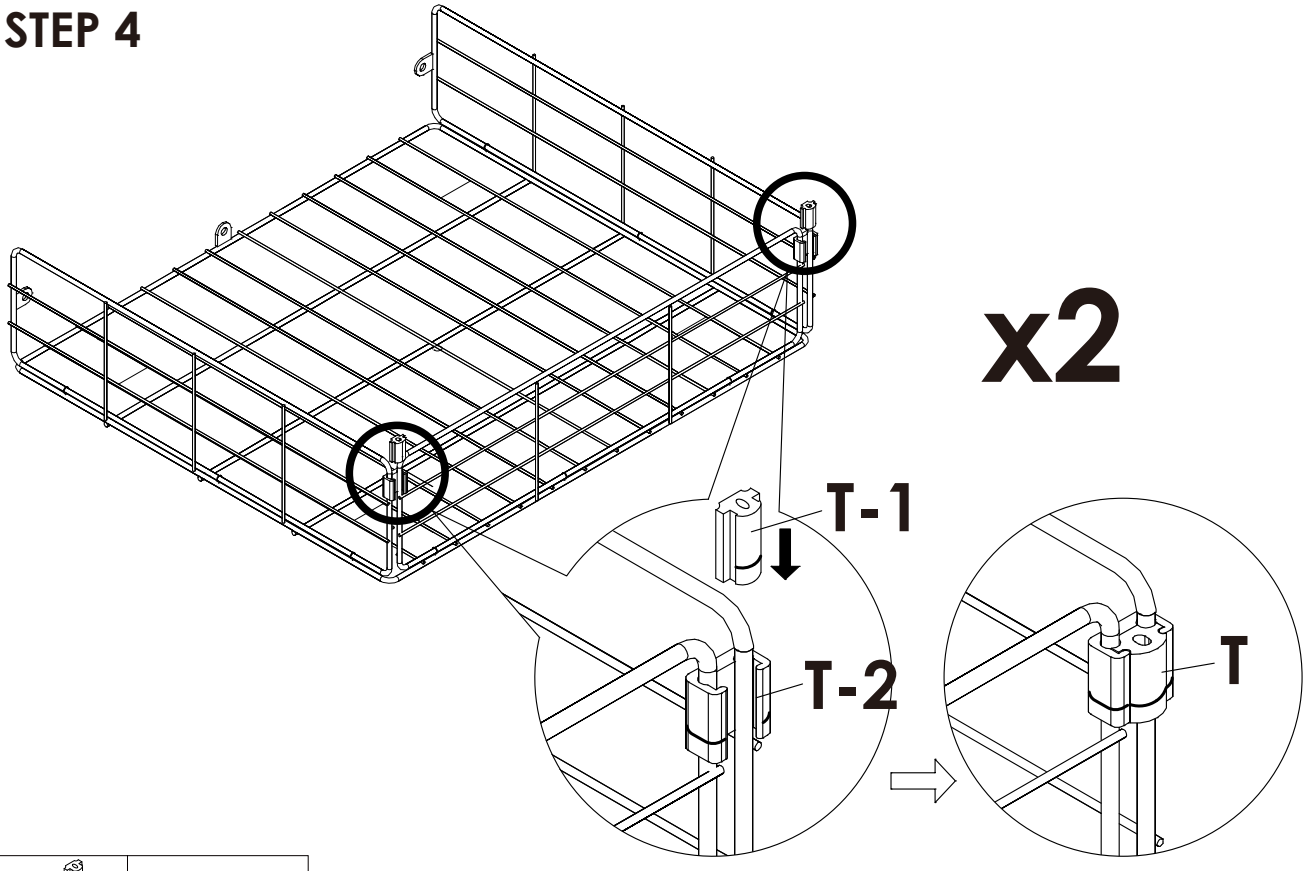

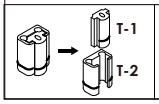

T x 4PCS

Assembly Steps(EN) / Montageschritte(DE)

STEP 5

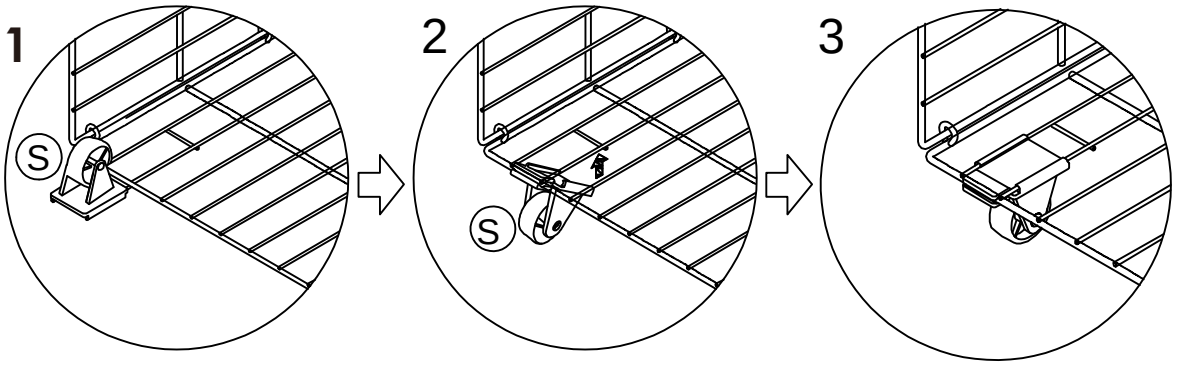

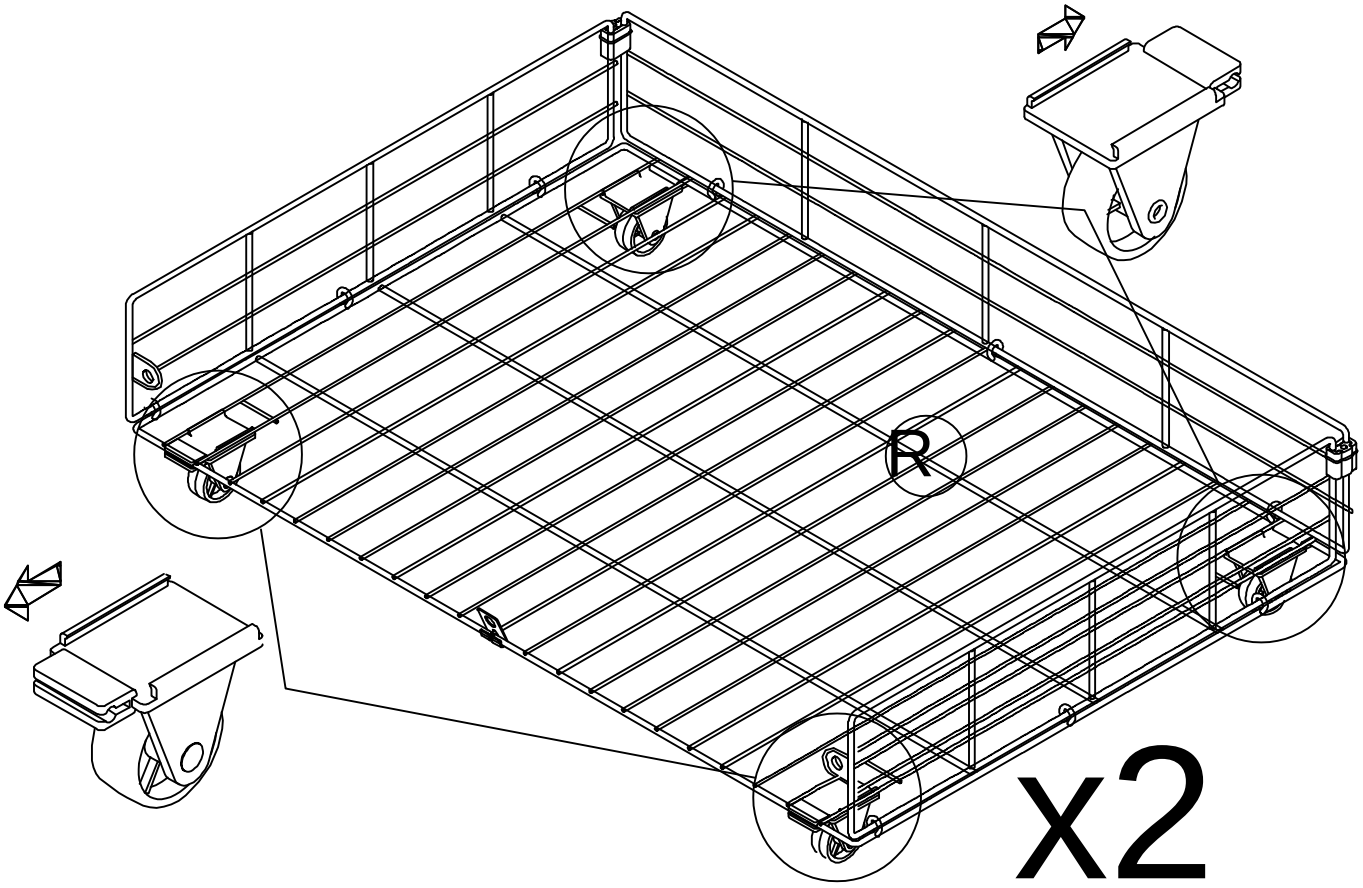

1. Please Clip the wheels on the big iron wire first, As shown in the figure.

2. Please turn the wheel over, keep the plastic plate of the wheel between the two wires, and then press hard so that the wires are stuck into the plastic plate. This requires some strength.

3. Place the drawer in the right way as picture shows, it would help you assemble drawer easily.

	S x 8PCS

Assembly Steps(EN) / Montageschritte(DE)

STEP 6

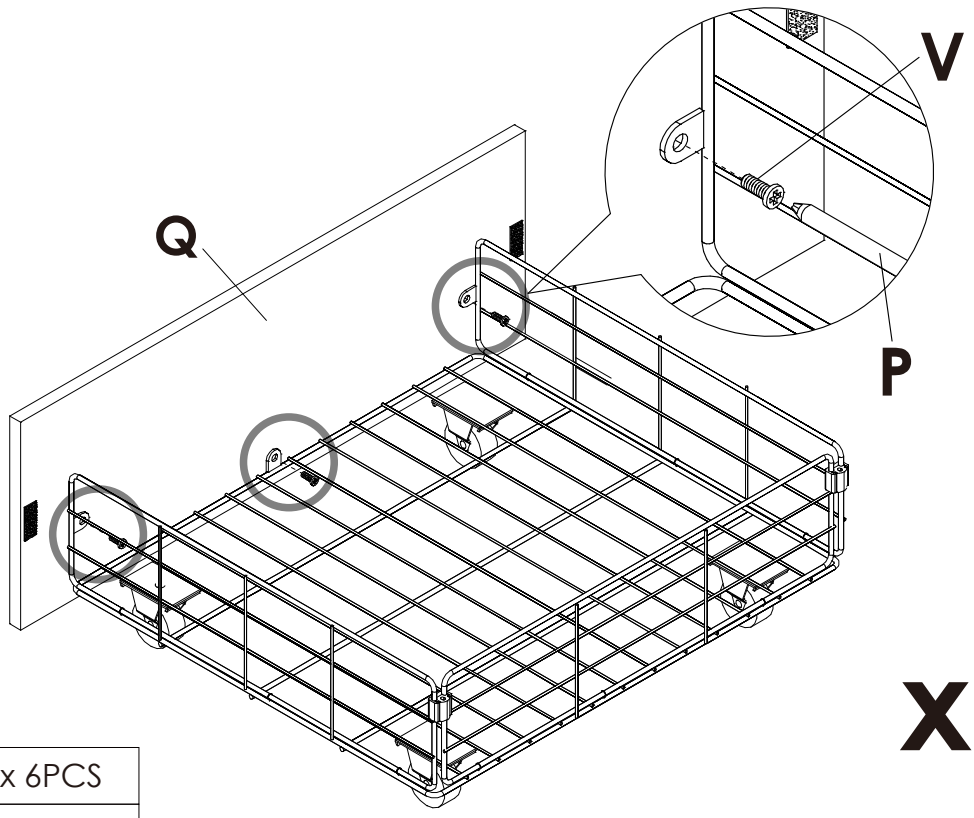

	**V** x 6PCS
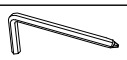	**P** x 1PC

STEP 7

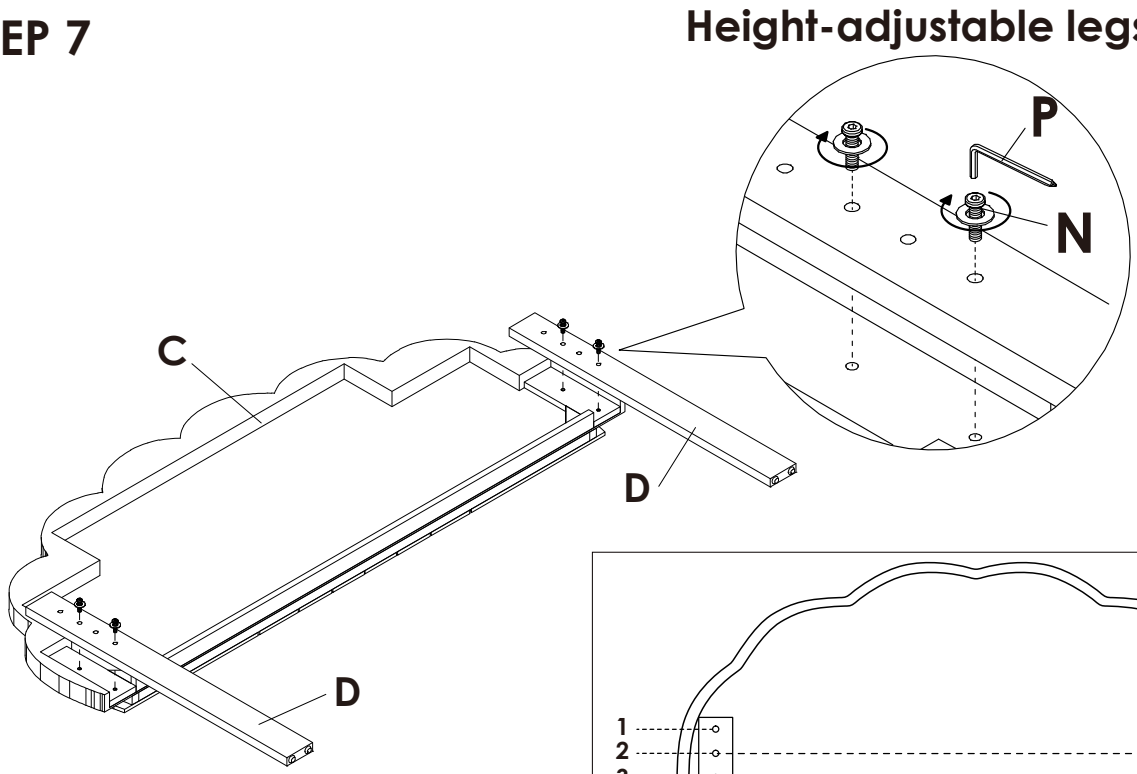

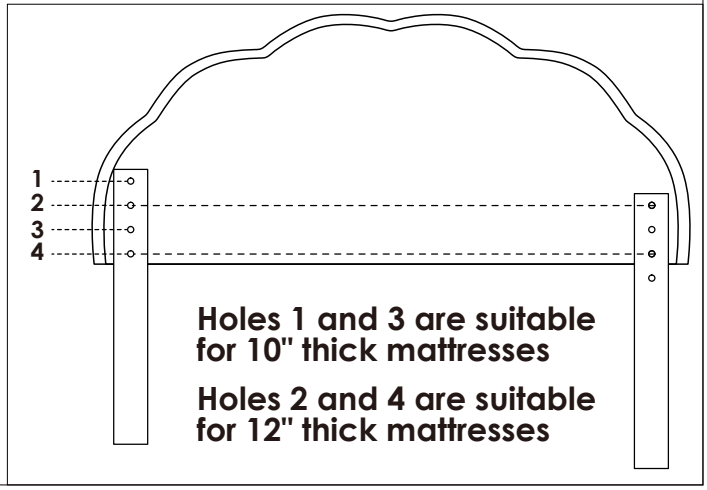

	**N** x 4PCS
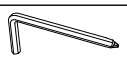	**P** x 1PC

Assembly Instruction of (Bed)

STEP 8

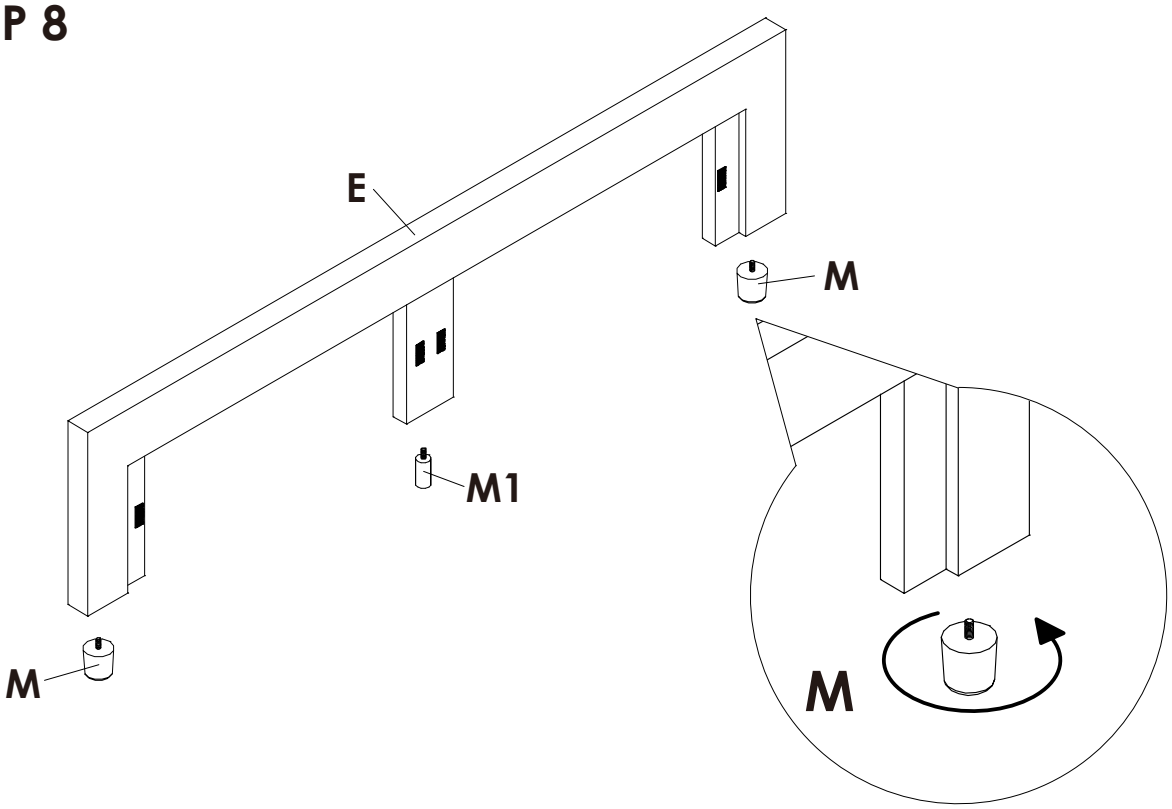

STEP 9

Connect **F1** and **F2** together with **K**, and lock the iron frame, there are 2 holes on the inside of the board. Lock **W** and **X** on both sides of the board, with 3 holes on each side.

Note: The installation direction is as shown in the picture.

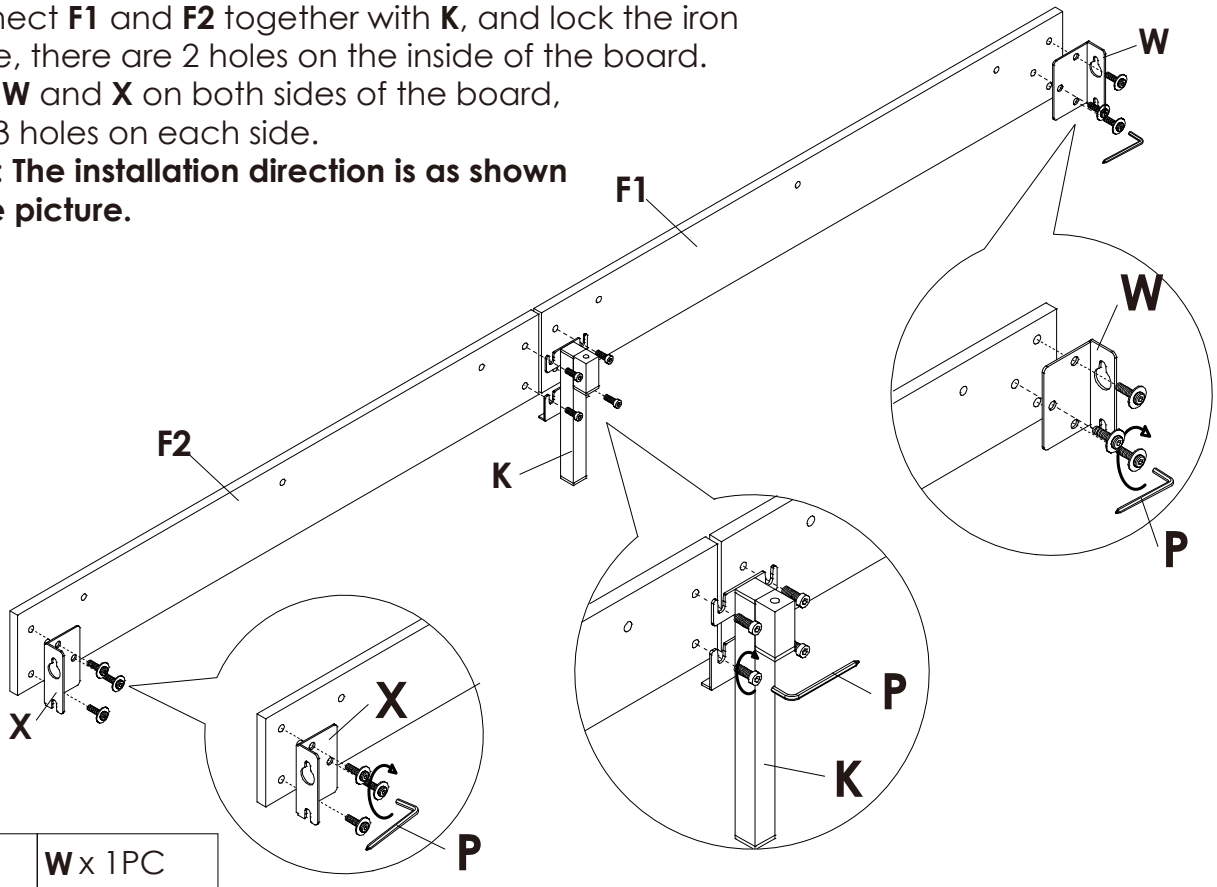

	**W** x 1PC
	**X** x 1PC
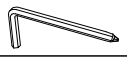	**P** x 1PC

Assembly Instruction of (Bed)

STEP 10

Connect **F1** and **F2** together with **K**, and lock the iron frame, there are 2 holes on the inside of the board. Lock **W** and **X** on both sides of the board, with 3 holes on each side.

Note: The installation direction is as shown in the picture.

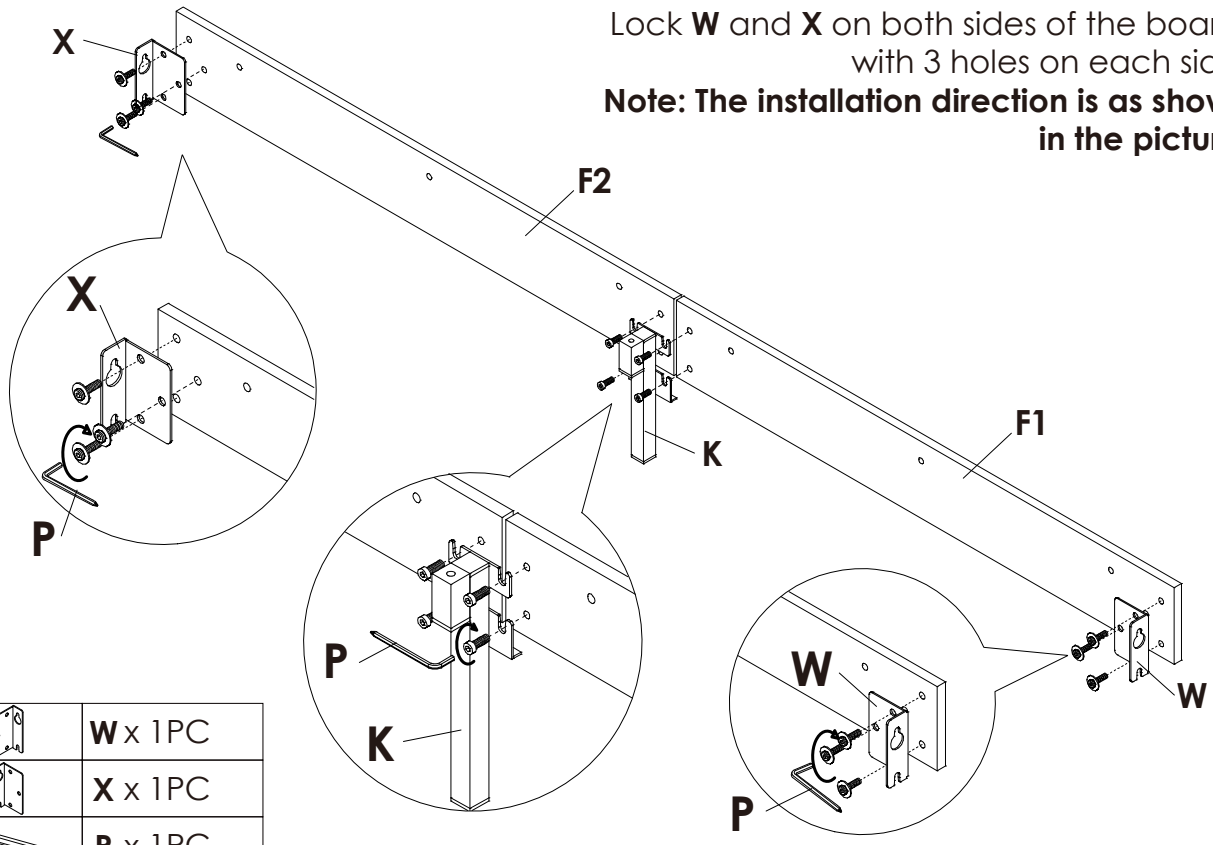

	W x 1PC
	X x 1PC
	P x 1PC

STEP 11

Noted that the middle cross beam, the direction of the red arrow is the front

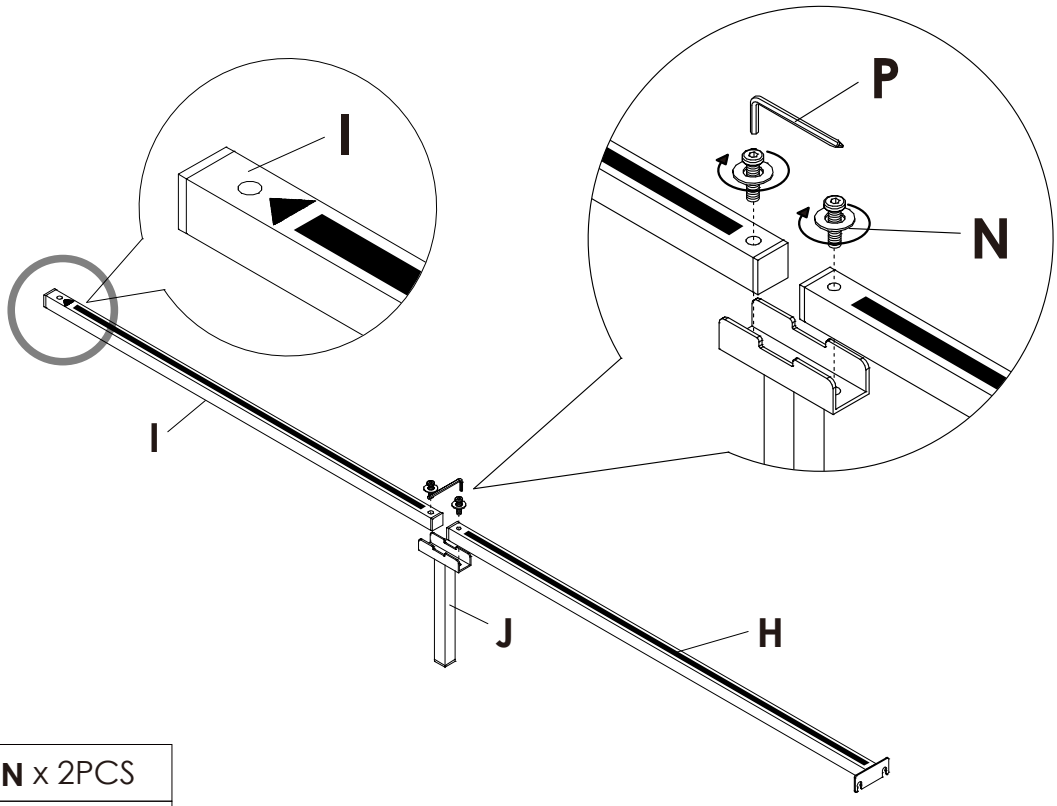

	N x 2PCS
	P x 1PC

Assembly Instruction of (Bed)

STEP 12 Loosen the screws on the side legs of the headboard and footboard, hang the brackets, and tighten the inner screws.

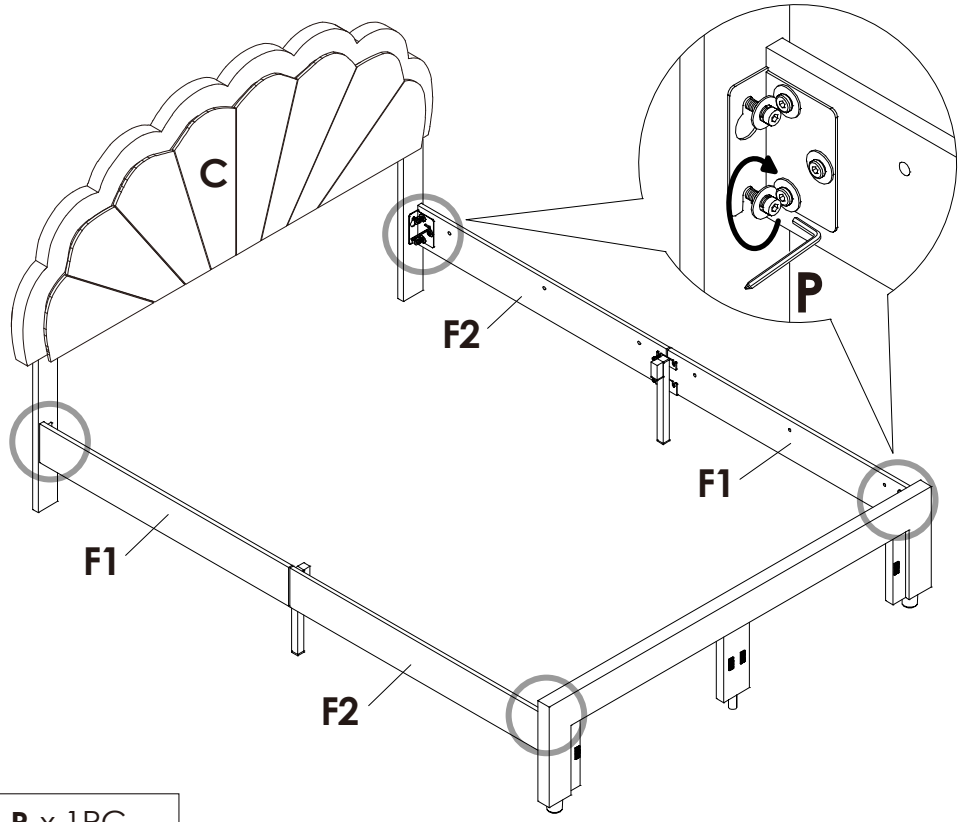

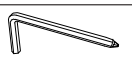 **P** x 1PC

STEP 13 Loosen the screw in the middle of the footboard, hang the bracket, and tighten the inner screw.

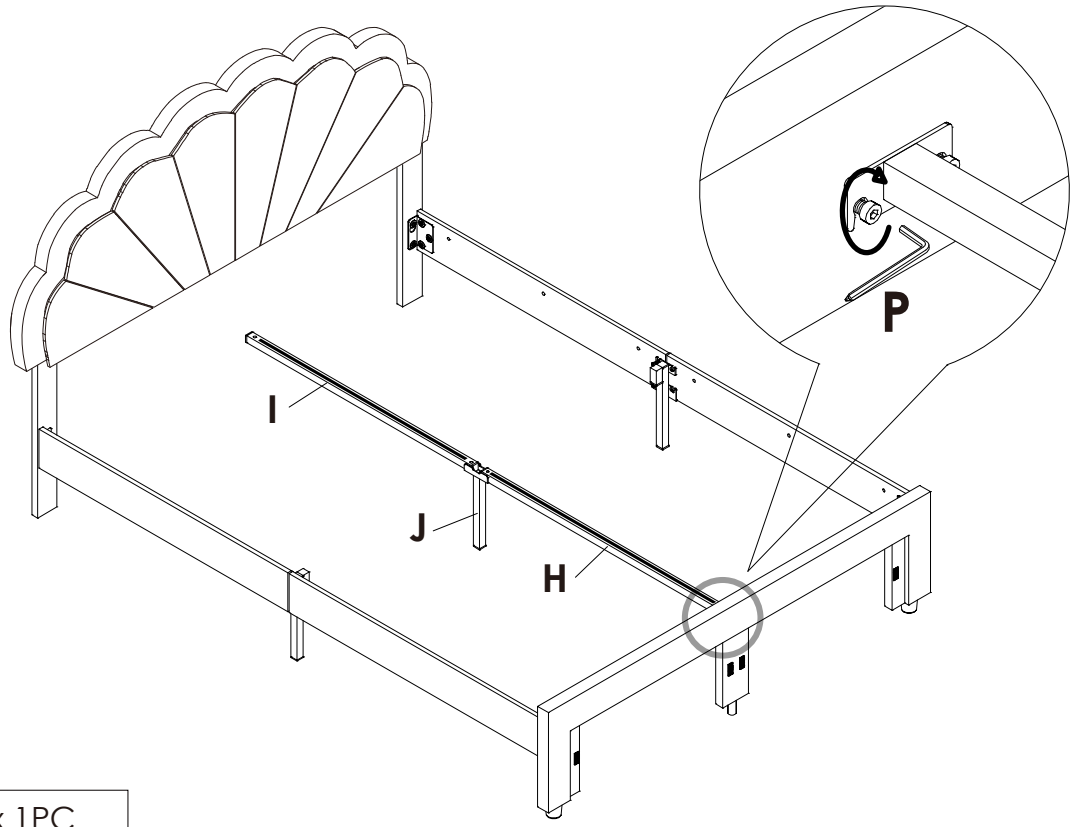

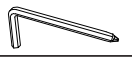 **P** x 1PC

Assembly Instruction of (Bed)

STEP 14

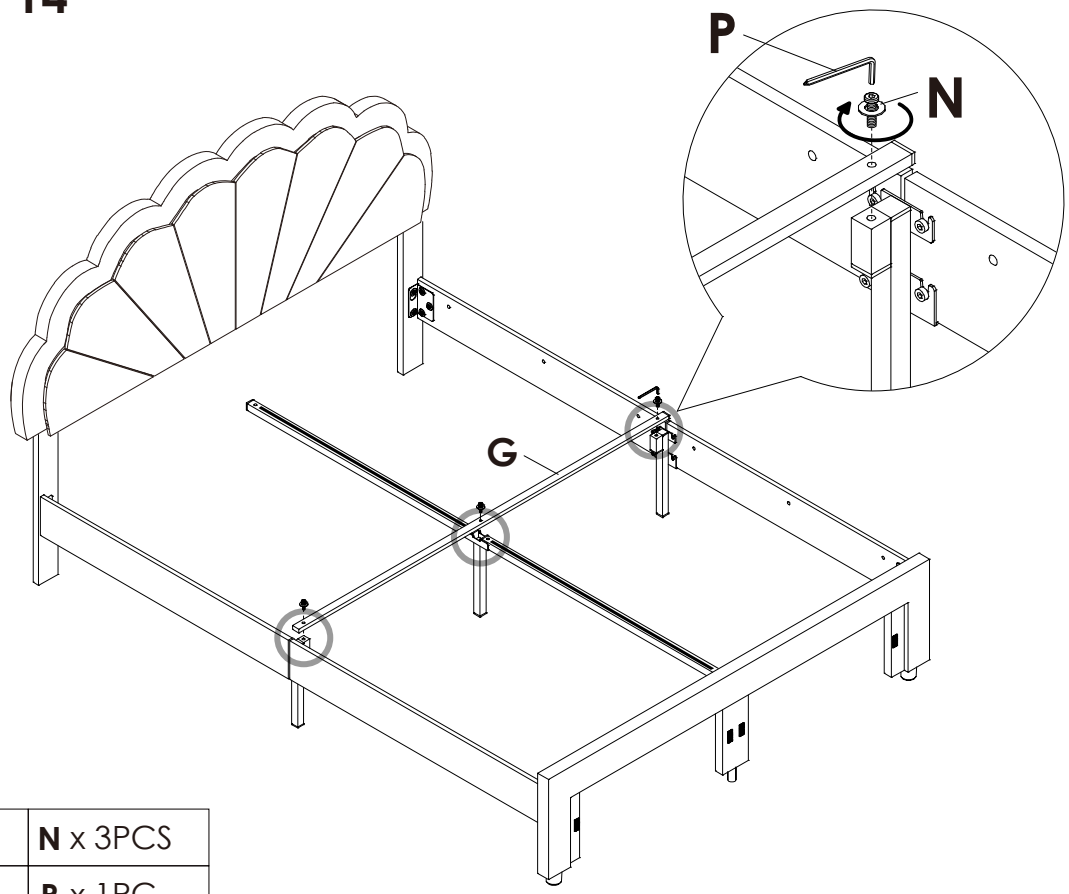

	**N** x 3PCS
	**P** x 1PC

STEP 15

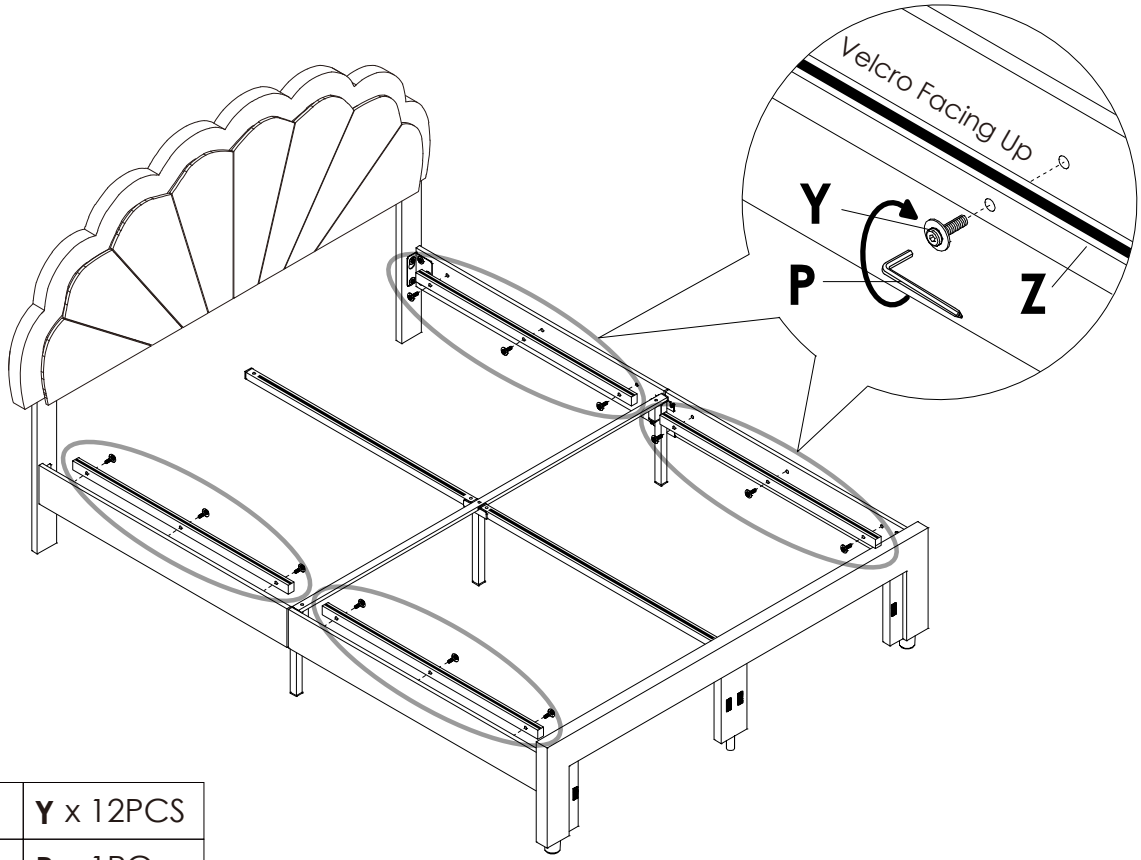

	**Y** x 12PCS
	**P** x 1PC

Assembly Instruction of (Bed)

STEP 16

No Washer Gasket

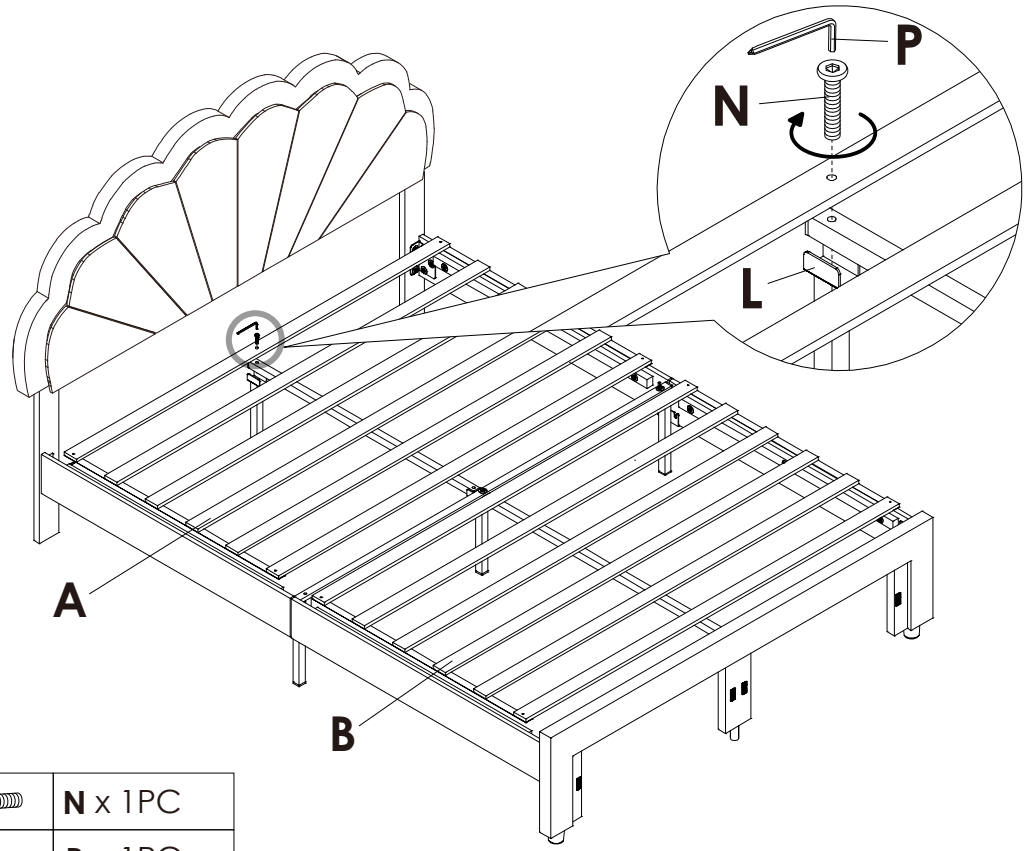

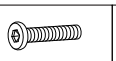	**N** x 1PC
	**P** x 1PC

STEP 17

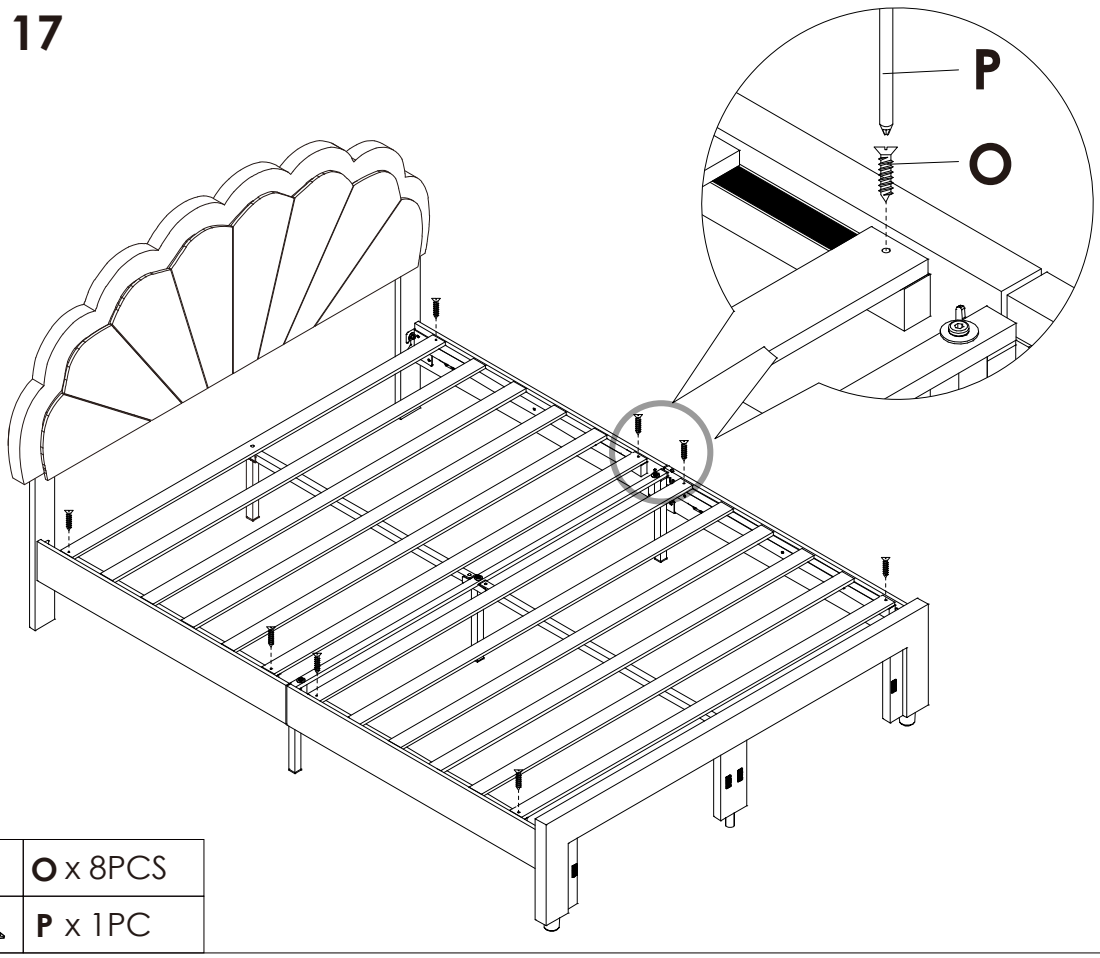

	**O** x 8PCS
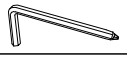	**P** x 1PC

STEP 18

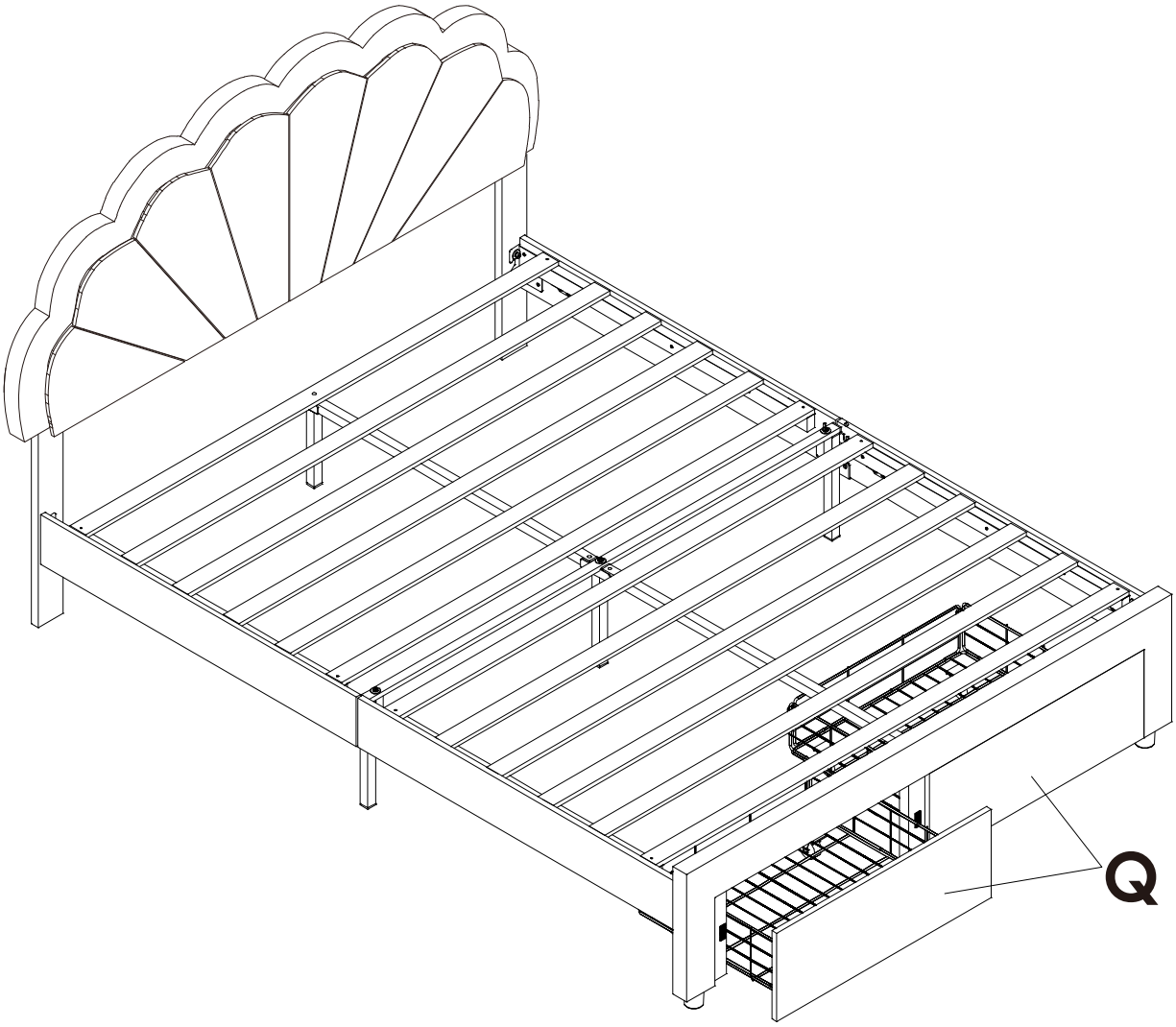

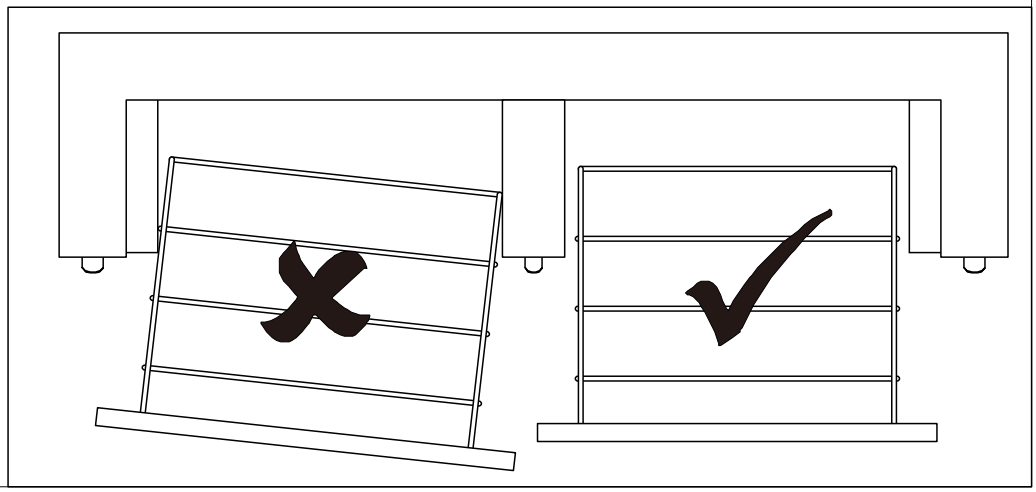

Assembly Instruction of (Bed)

STEP 19

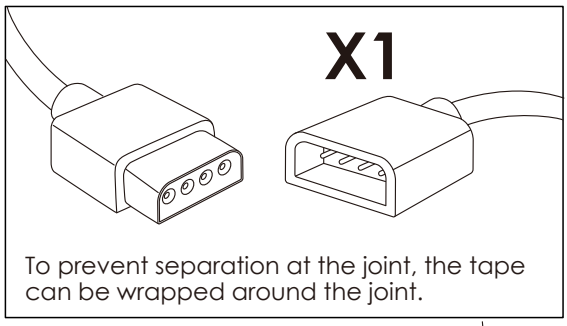

To prevent separation at the joint, the tape can be wrapped around the joint.

NOTE: The black part of the receiver (X1) needs to be exposed to air in order to better control the LED light.

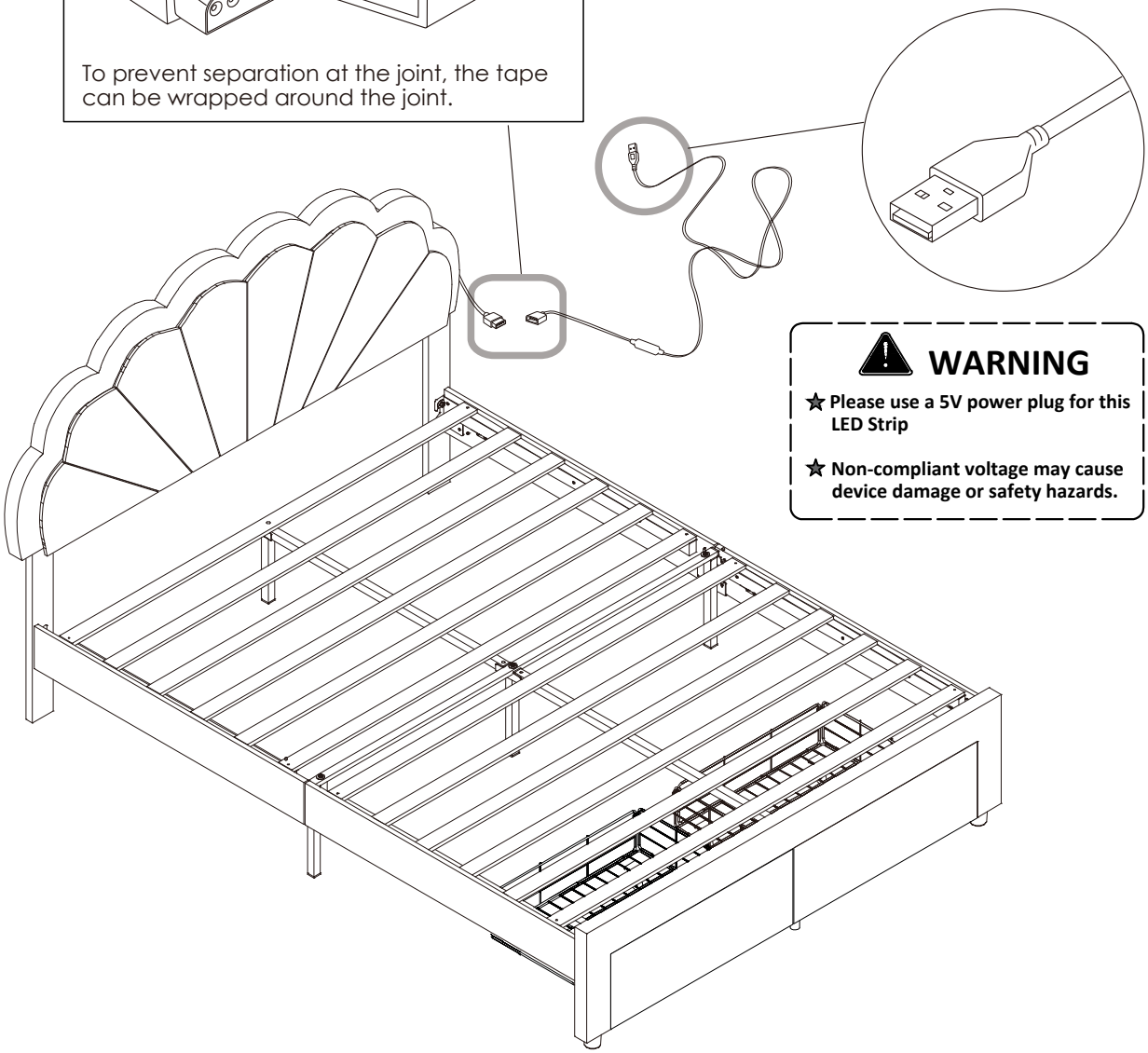

WARNING

- **Please use a 5V power plug for this LED Strip**
- **Non-compliant voltage may cause device damage or safety hazards.**

Please scan the QR code on the manual/controller and install the application.
Step1: Please make sure your phone has Bluetooth enabled.
Step2: The LED light will automatically connect to the APP.

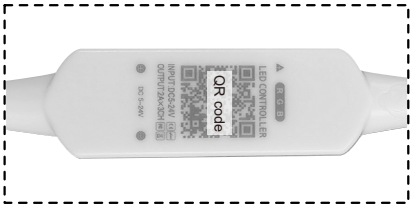

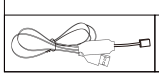

X1 x 1PC

⚠WARNING

INGESTION HAZARD: This product contains a button cell or coin battery.
DEATH or serious injury car occur if ingested.
A swallowed button cell or coin battery can cause **Internal Chemical Burns** in as little as **2 hours.**
KEEP new and used batteries **OUT OF REACH of CHILDREN**
Seek immediate medical attention if a battery is suspected to be swallowed or inserted inside any part of the body.



- Remove and immediately recycle or dispose of used batteries according to local regulations and keep away from children. Do NOT dispose of batteries in household trash or incinerate.
- Even used batteries may cause severe injury or death.
- Call a local poison control center for treatment information.
- This product contains a CR2025,DC3V coin battery. A coin battery can cause serious internal chemical burns if swallowed.
- Non-rechargeable batteries are not to be recharged.
- Do not force discharge, recharge, disassemble, heat above 132°F (60°C) or incinerate. Doing so may result in injury due to venting, leakage or explosion resulting in chemical burns.
- Ensure the batteries are installed correctly according to polarity (+ and -).
- Do not mix old and new batteries, different brands or types of batteries, such as alkaline, carbon-zinc, or rechargeable batteries.
- Remove and immediately recycle or dispose of batteries from equipment not used for an extended period of time according to local regulations.
- Always completely secure the battery compartment. If the battery compartment does not close securely, stop using the product, remove the batteries, and keep them away from children.

Dongguan Huima Synthetic Electronics Co.,Ltd
Model number: HM-LY-2.4G

This device complies with Part 15 of the FCC Rules. Operation is subject to the following two conditions:

(1) This device may not cause harmful interference, and (2) this device must accept any interference received, including interference that may cause undesired operation.

Caution: changes or modifications not expressly approved by the party responsible for compliance could void the user's authority to operate the equipment.

NOTE: This equipment has been tested and found to comply with the limits for a Class B digital device, pursuant to Part 15 of the FCC Rules. These limits are designed to provide reasonable protection against harmful interference in a residential installation. This equipment generates, uses and can radiate radio frequency energy and, if not installed and used in accordance with the instructions, may cause harmful interference to radio communications. However, there is no guarantee that interference will not occur in a particular installation. If this equipment does cause harmful interference to radio or television reception, which can be determined by turning the equipment off and on, the user is encouraged to try to correct the interference by one or more of the following measures:

- Reorient or relocate the receiving antenna.
- Increase the separation between the equipment and receiver.
- Connect the equipment into an outlet on a circuit different from that to which the receiver is connected.
- Consult the dealer or an experienced radio/TV technician for help.

Thanks Gracias!

Made in China