WFDP-06

Waterfall Kitchen Sink Accessory

SPECIFICATION SHEET

Waterfall Dimensions
Overall Dimensions: 4" x 3 3/4" x 3 1/2"

Features
- Premium Metal and Plastic Construction
- Can connect to hot and cold water supply, along with the existing faucet, using the included T-adapters.
- Maximum 1.8 gpm @ 60 psi, 4.5L/min
- Adjustable 10 degrees nozzles
- Connections 3/8" Compression
- Dome Shaped Screen Washer
- Max Deck Thickness: 3 1/2"
- Installation hole diameter range: 1 3/8" to 1 3/4"
- Soft silicone nozzles, easily removable for cleaning or replacement

Available Finishes
- Spot Free Stainless Steel
- Matte Black
- Spot Free Brushed Brass
- Spot Free Brushed Brass / Matte Black



Warranty
Kraus 1 Year Limited Warranty
see website for details **www.kraususa.com**

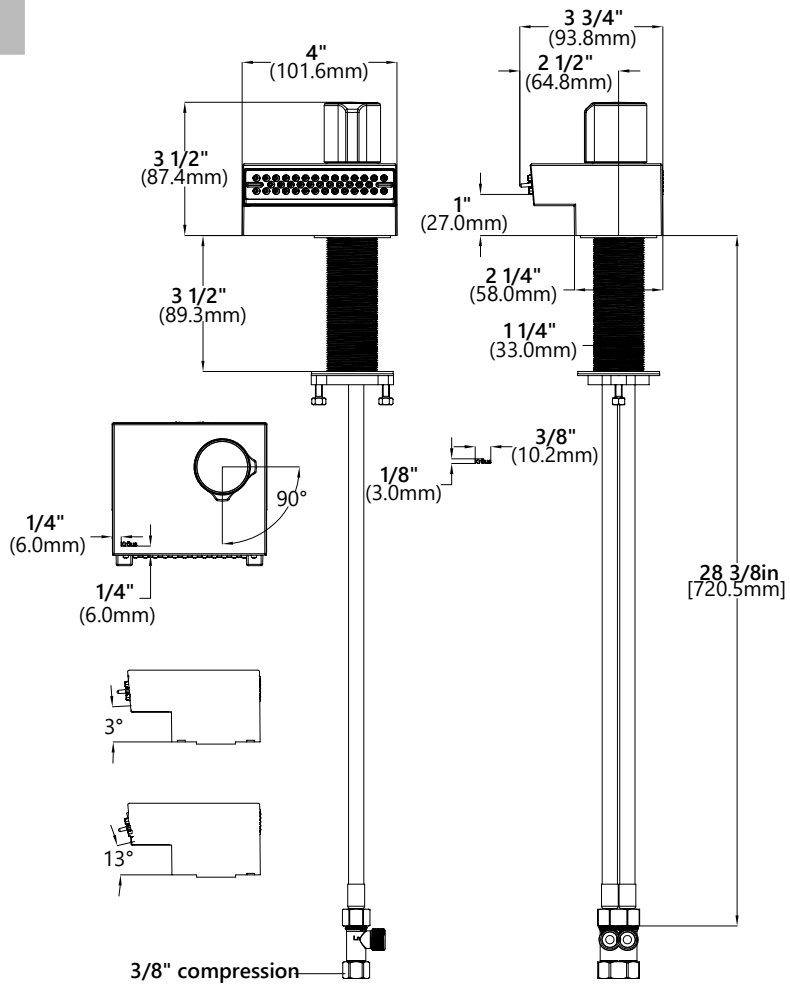

Kraus USA Plumbing LLC Customer Service
1.800.775.0703 | customerservice@kraususa.com

REV. Sept 30, 2026