KPF-2620

Single Handle Pull Down Kitchen Faucet

Kräus®

SPECIFICATION SHEET

Faucet Dimensions
Overall Height: 15 3/4"
Overall Width: 4 1/4"
Spout Height: 8 1/8"
Spout Reach: 8 3/4"

Features
- Metal Body
- Plastic Sprayer
- Lead Free Brass Waterway
- 360° Swivel Spout
- Pull Down Faucet
- Flow Rate: 1.75 gpm (6.6L/min) @ 60 psi
- Dual Function Sprayhead - Spray/Stream
- Easy Clean Rubber Nozzles
- Quick Connect Weight
- 35mm Ceramic Cartridge
- 29.3" Flexible Nylon Waterlines
- Dome Shaped Screen Washer
- Sprayer Hose Length 60"
- Swivel Sprayer Connection
- Quick Connect Sprayer
- Connections 3/8"
- TPI of aerator in the Sprayer - M16.5*1

Accessories Included
- Deck Plate
- Weight
- Hex Wrench

Available Finishes
- Brushed Gold
- Chrome
- Spot Free all-Brite™ Stainless Steel

CODES/STANDARDS:
Product Certification
cUPC (ASME A112.18.1/CSA B125.1)
NSF/ANSI Standard 61 and 372 certified by IAPMO
AB1953, MASS, CEC, DOE

NOTE: Some Kitchen Faucets that do not have a pull out or pull down sprayer may be connected to a portable dishwasher. Pull out and pull down faucets should never be connected to portable dishwashers because potential pressure fluctuations during washing cycles cause hose ruptures or leaks.

Warranty
Kraus Limited Lifetime Warranty
see website for details **www.kraususa.com**

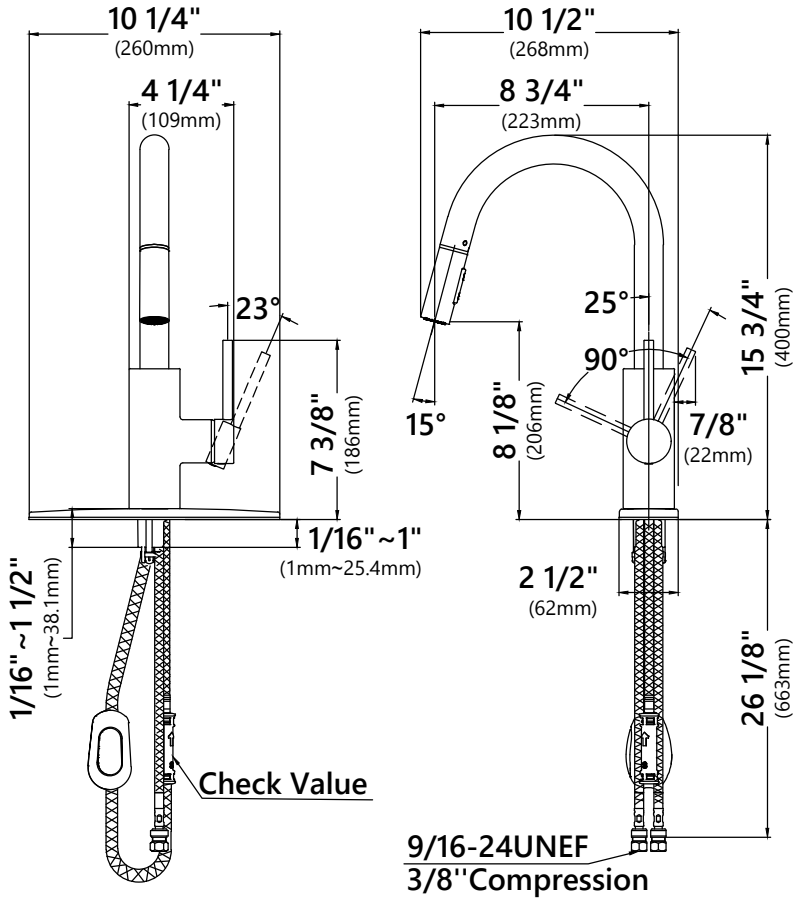

Kraus USA Customer Service
1.800.775.0703 | customerservice@kraususa.com

REV. May 22, 2019