Assembly Instructions

Caution: You must read this before you proceed.

Table

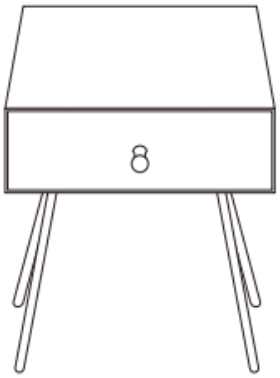

Part List

Label	Picture	Description	Qty
A		Table Top	1
B		Leg	4

Assembly Preparation

Before Beginning Assembly:



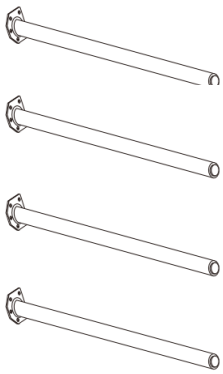

- Read instructions, cover to cover-
- Have 2 adults on hand for assembly-
- Do not assemble on flooring or carpet-
- Assemble on a clean non-marring surface (packing foam)-
- Save all packaging until finished-

Assembly Steps

Overview

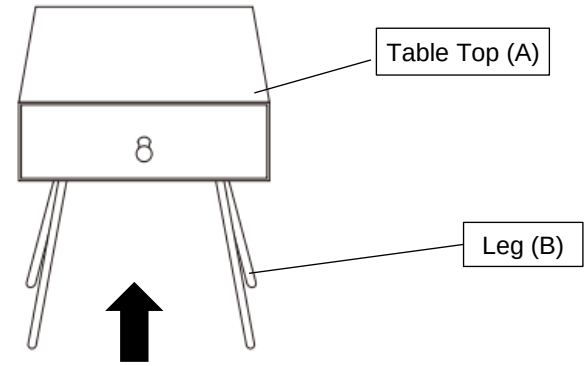

FRONT FACING

This Table has multiple parts and may require up to 30 minutes to assemble. To give you an overview of the Table parts, the above picture is to help you put the various parts into perspective. Please read through the instructions below to familiarise yourself with the parts and steps before assembly.

Step 1

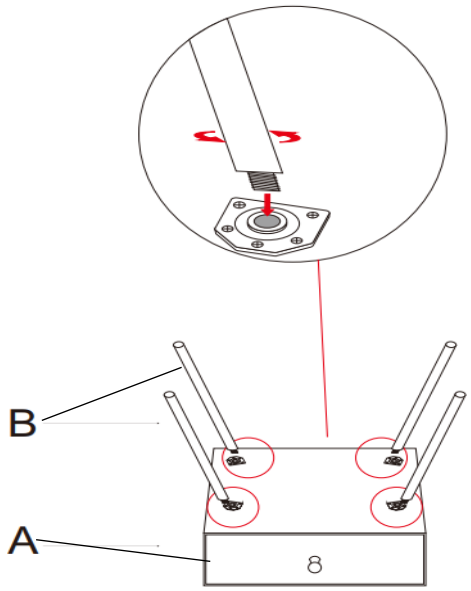

Place all parts on a clean, non-marring suface.
Place the Table Top(A) facedown.
Twist the Legs(B) into Table Top(A), as pictured.

Step 2	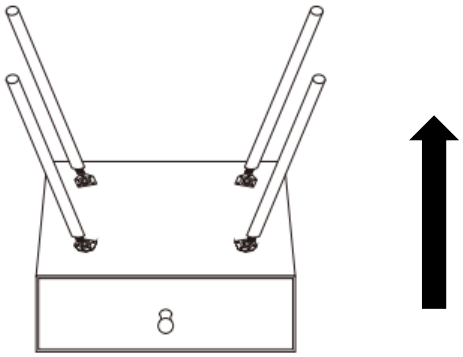
Stand the Table up.	
Step 3	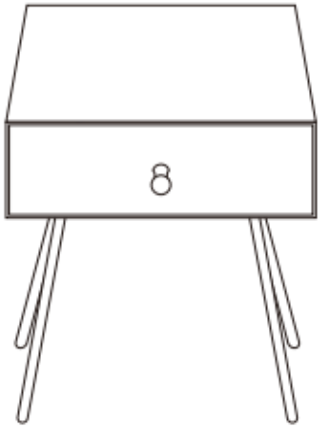
Your Table is now ready for use. **This Table can only be used on a flat, level surface.**	

Care &Maintenance



Do not put hot items directly on furniture surface.



Do not clean furniture with harsh cleansers or polish.



Do not place furniture under direct sunlight.



Do not place furniture near heating or cooling vents.



Do not write on furniture without a padded barrier to protect the surface.



Do not place furniture outside . For indoor use only .



Not for commercial use. For residential use only .



Stains may be removed with mild soap solution and damp cloth.



Children should not climb or jump on the furniture.



Dust and pick-up spills using a clean, non-colored, lint-free cloth .