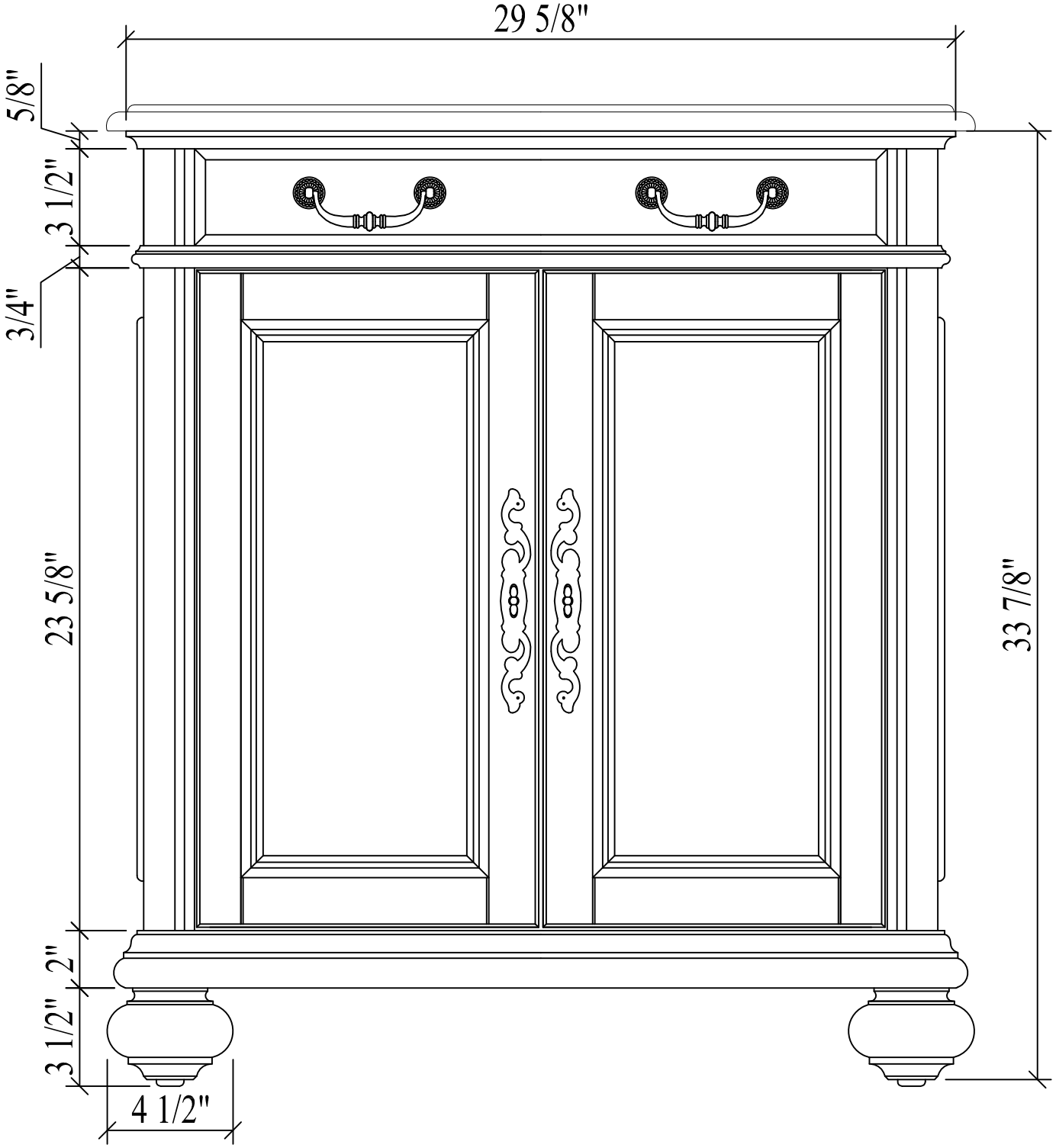
29 5/8"
5/8"
3 1/2"
3/4"
23 5/8"
33 7/8"
2"
3 1/2"
4 1/2"

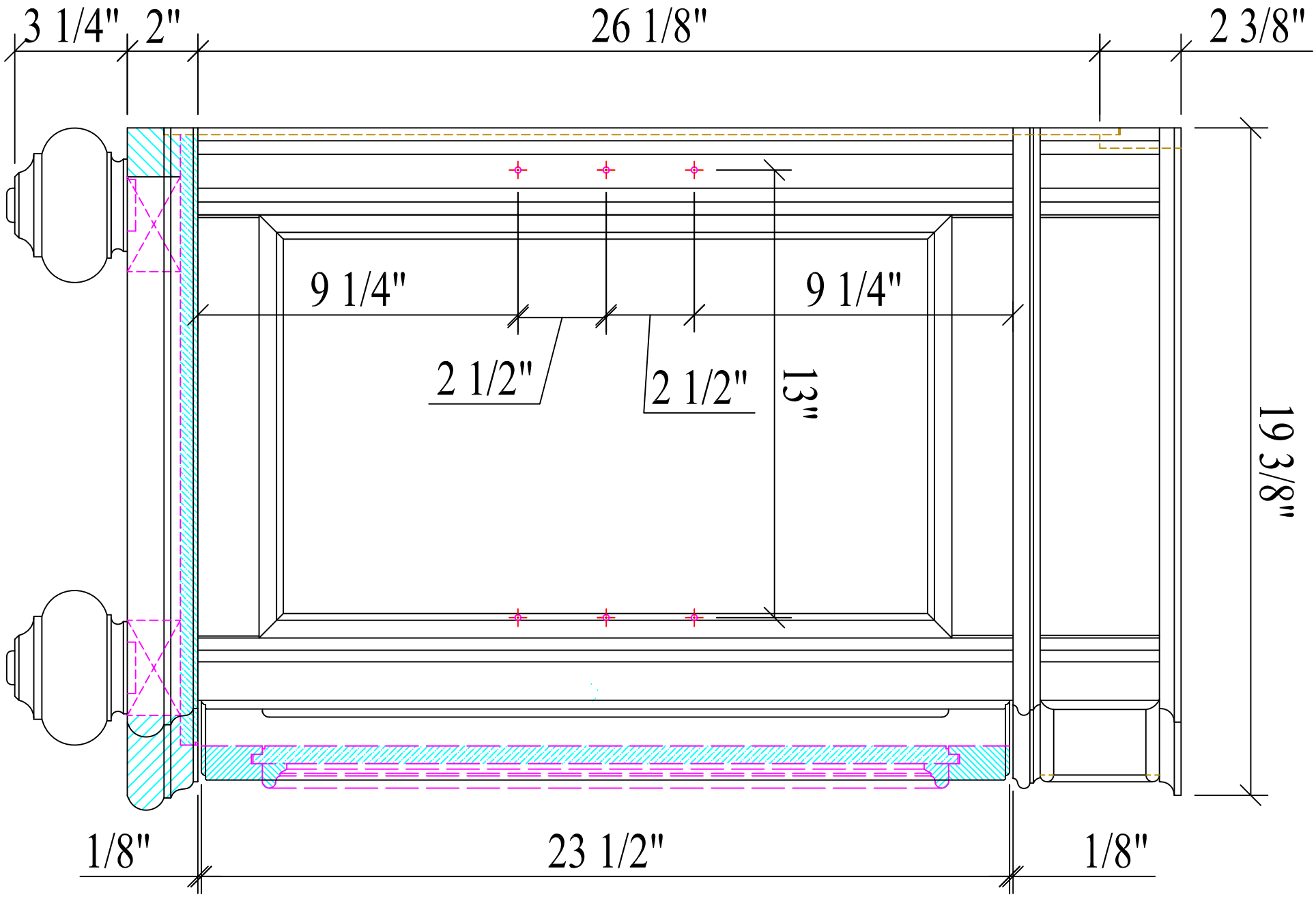
3 1/4"
2"
26 1/8"
2 3/8"
9 1/4"
9 1/4"
2 1/2"
2 1/2"
13"
19 3/8"
1/8"
23 1/2"
1/8"