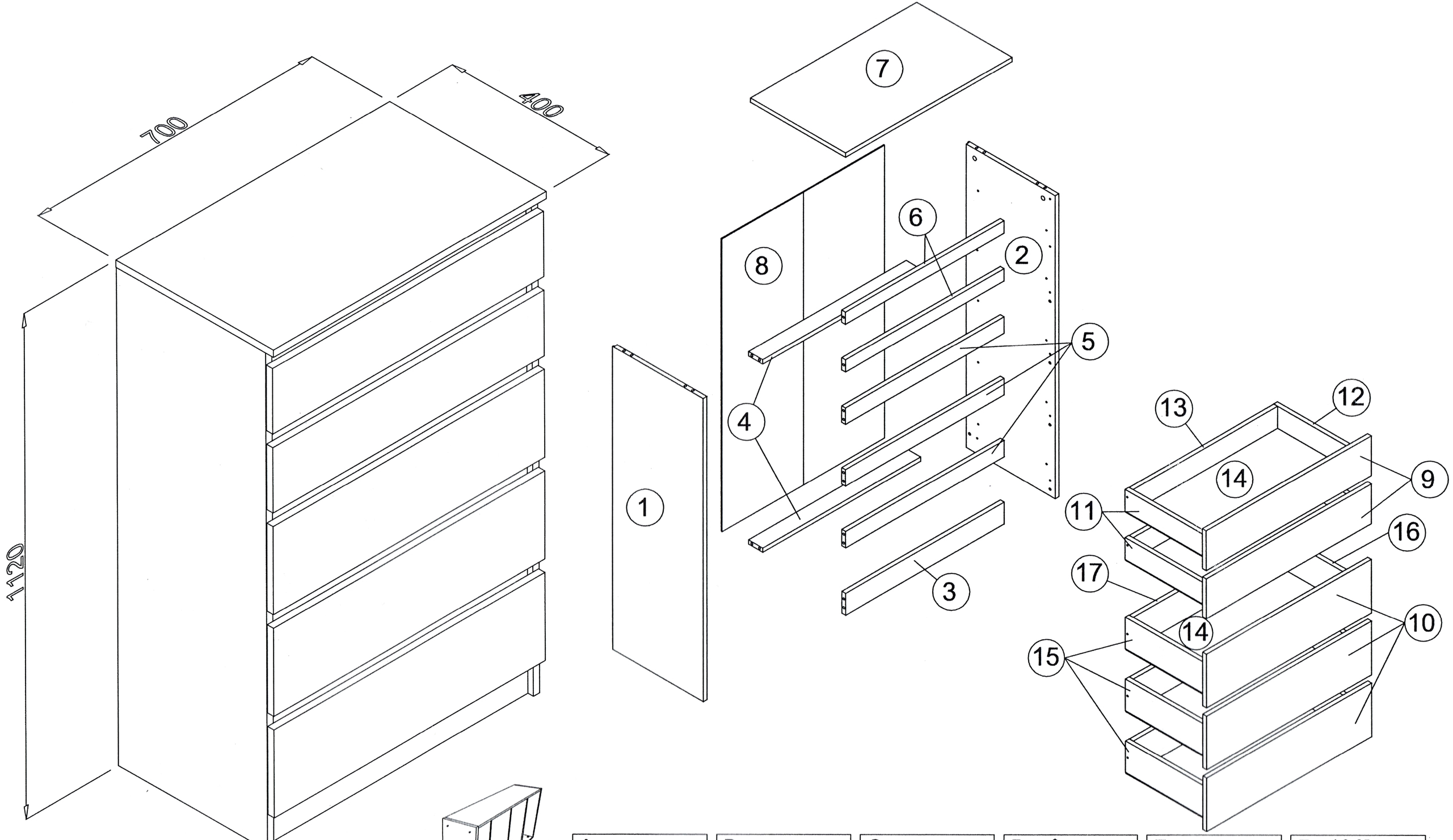

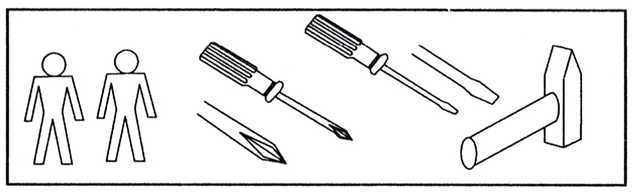

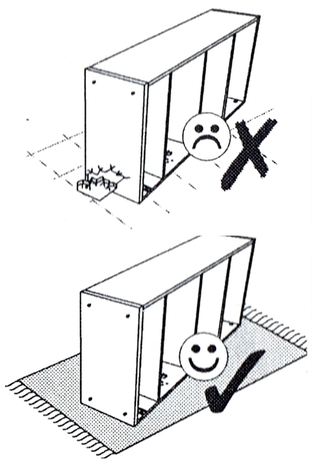

A 30,3 x30	B x30	C Ø8x35 x48	D L=350 x5	E 5,8x9 x20	F 4,0x35 x10
G 3,5x15 x20	H x4	J x50	x1	K L=1036 mm x1	L x10

1

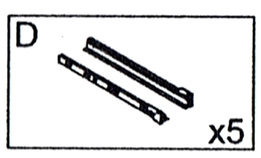

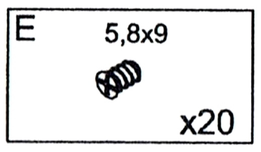

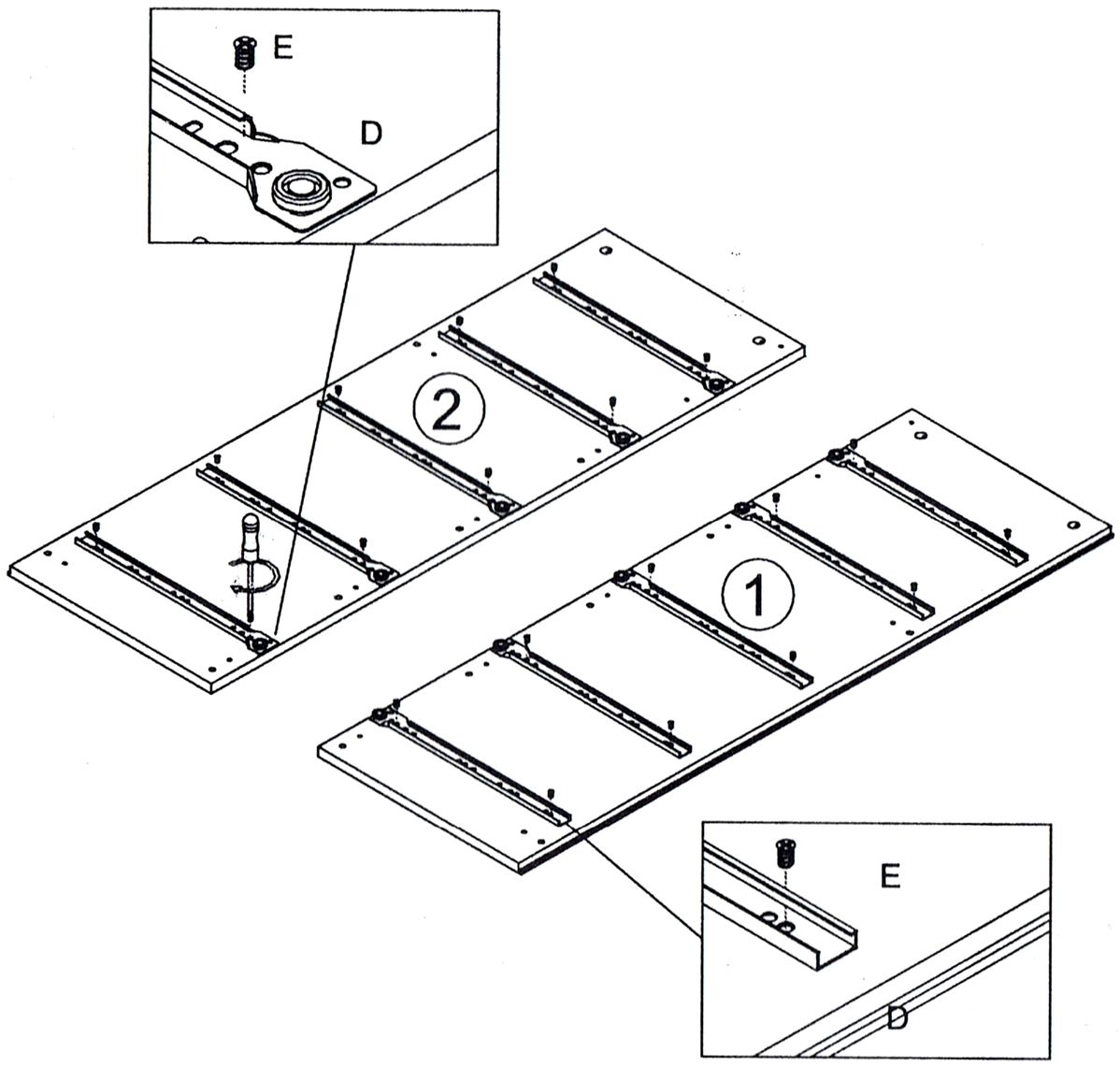

2

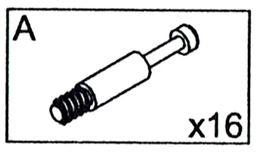

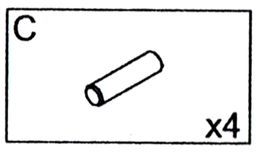

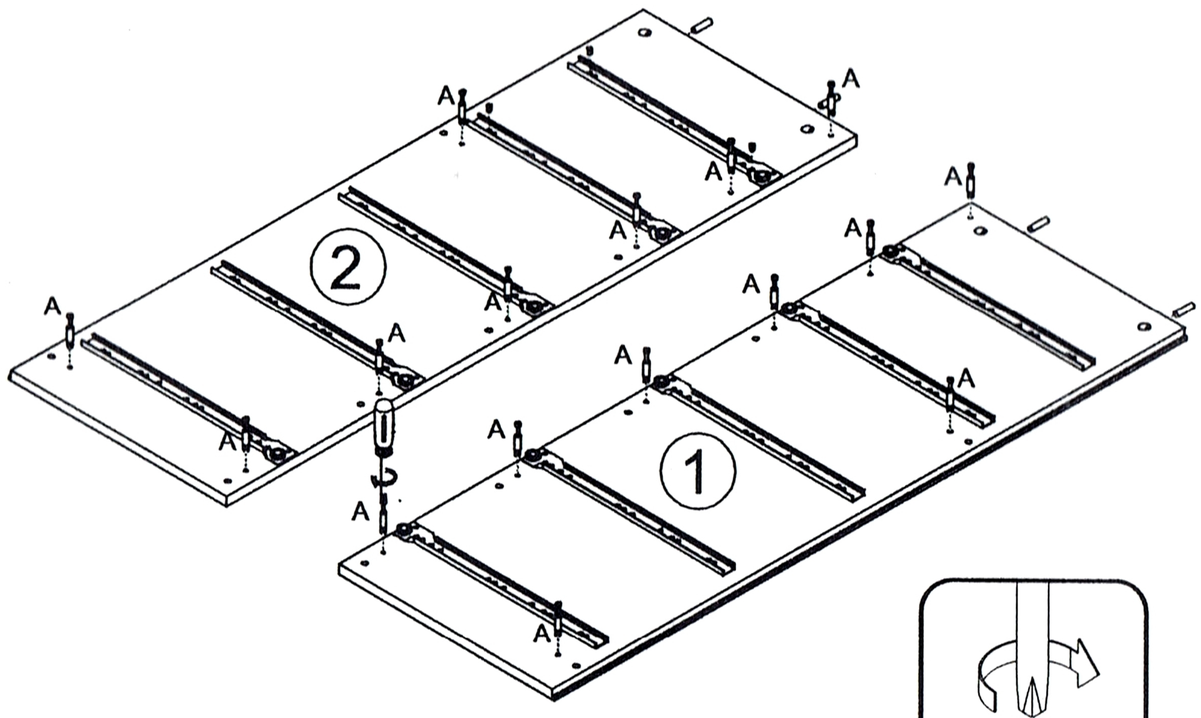

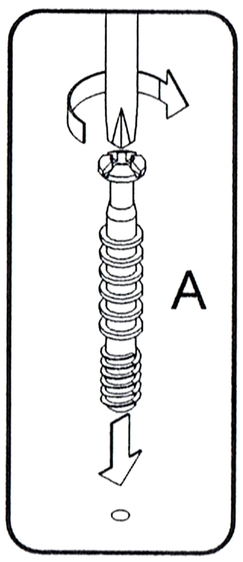

3

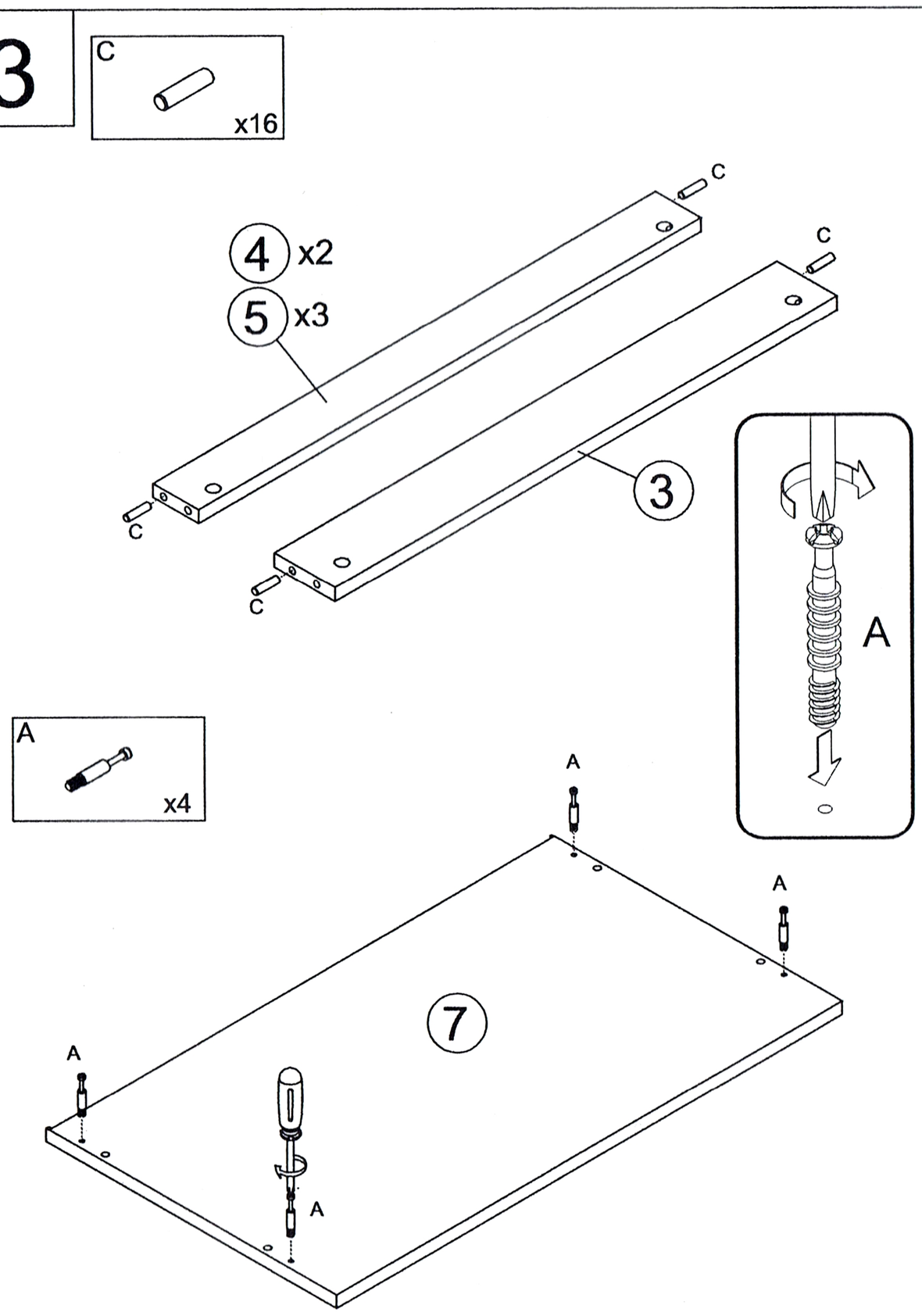

4

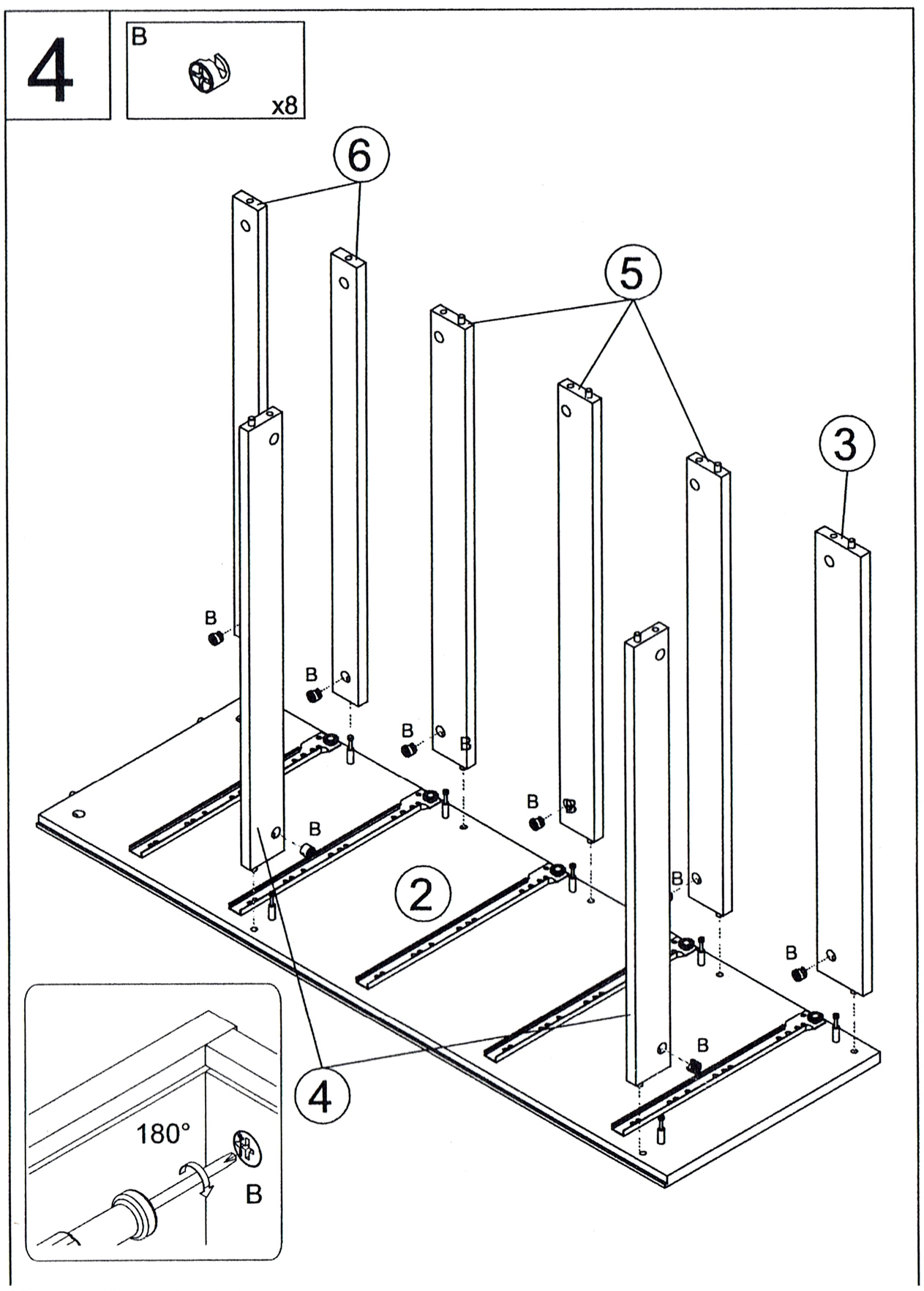

5

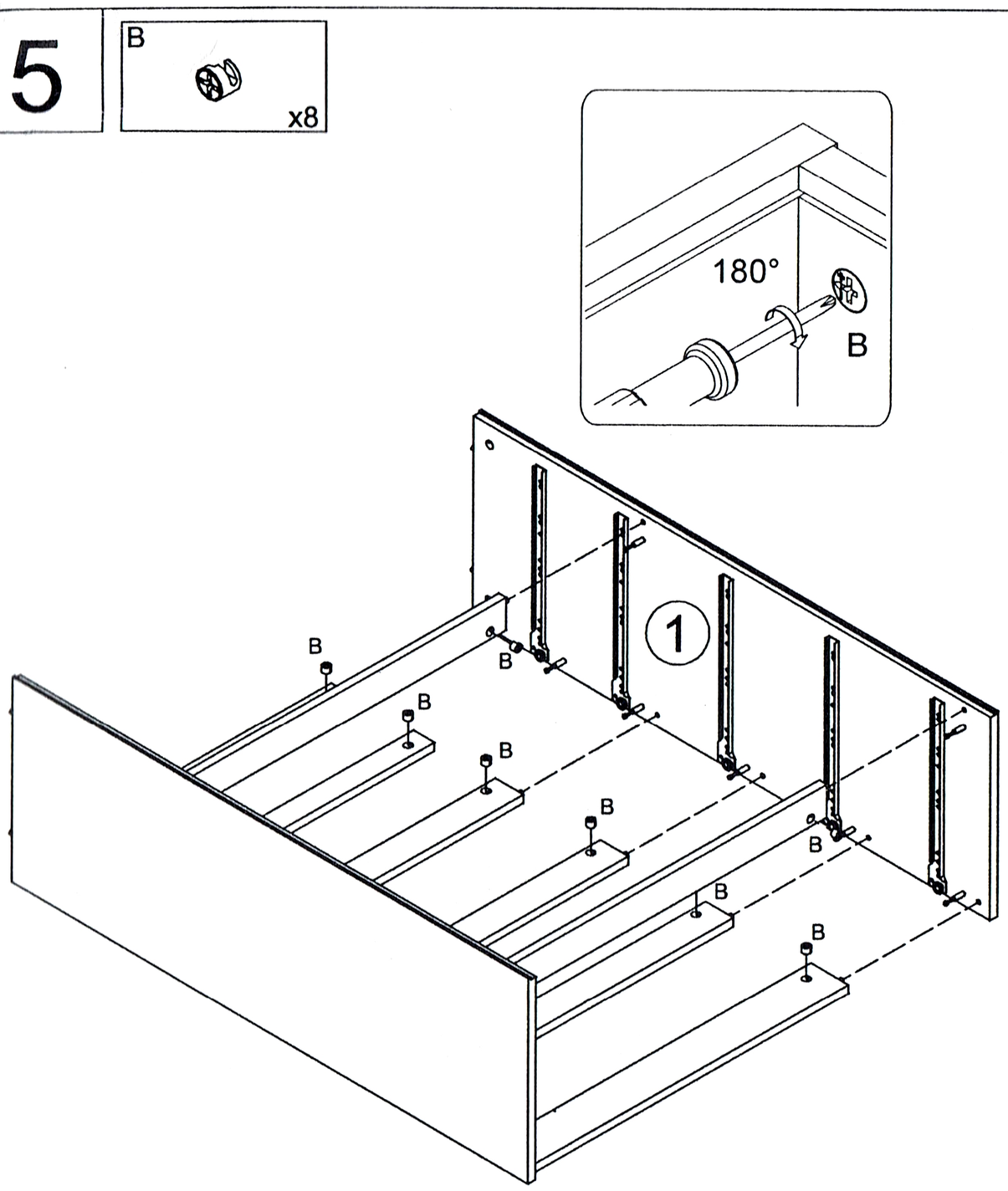

6

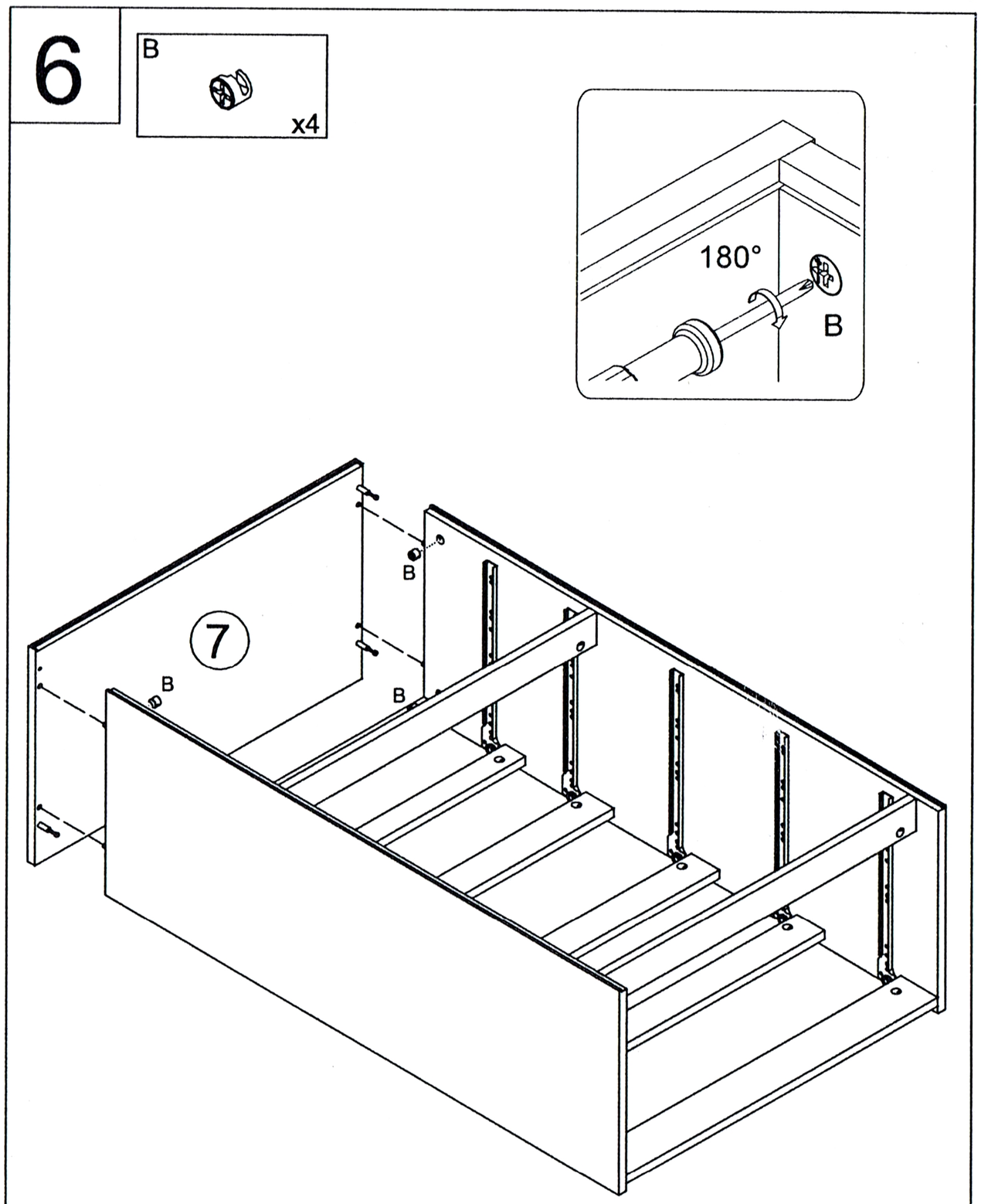

7

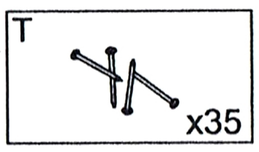
T
x35

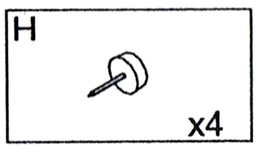
H
x4

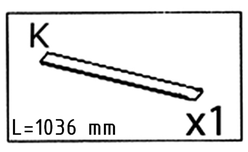
K
L=1036 mm
x1

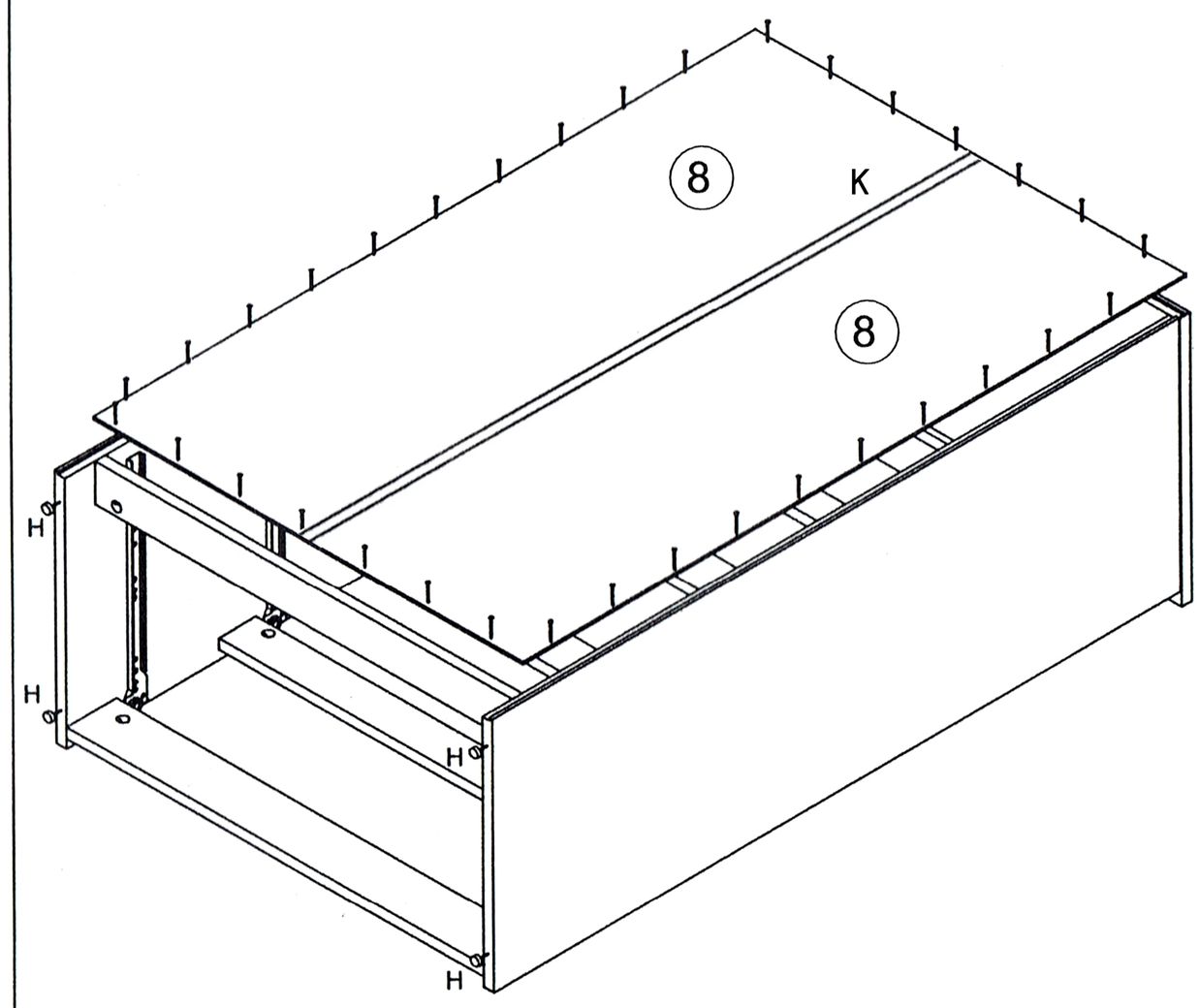
8
K
8
H
H
H
H

8

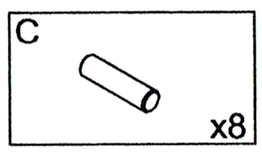
C
x8

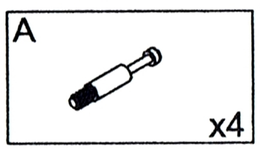
A
x4

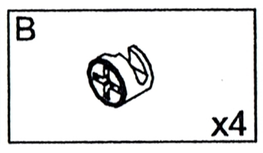
B
x4

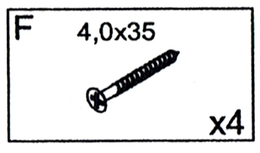
F
4,0x35
x4

x2

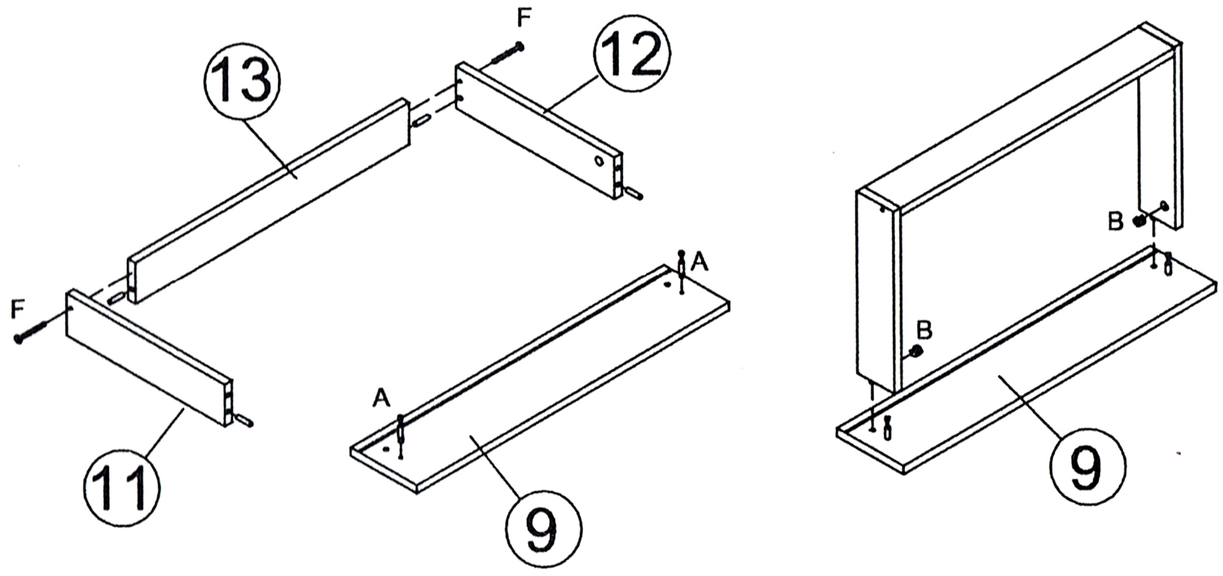
13
F
12
F
11
A
A
9
B
B
9

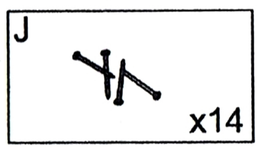
J
x14

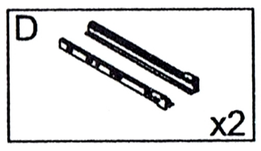
D
x2

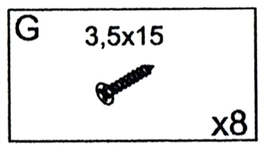
G
3,5x15
x8

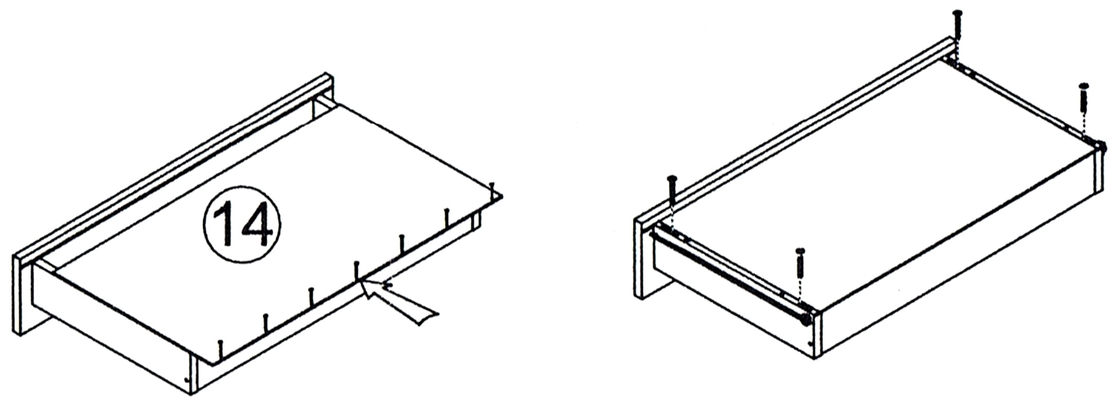
14

9

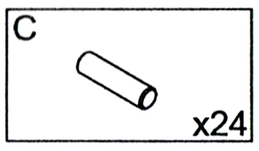
C
x24

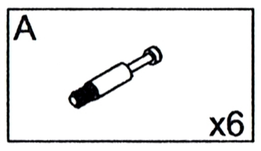
A
x6

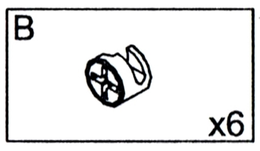
B
x6

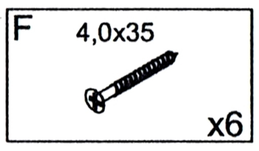
F
4,0x35
x6

x3

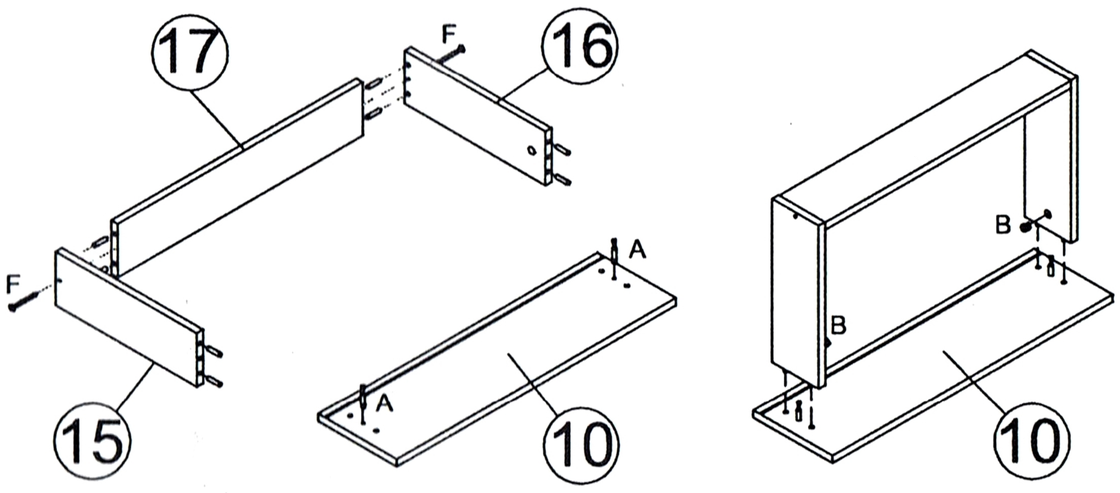
17
F
16
F
15
A
A
10
B
B
10

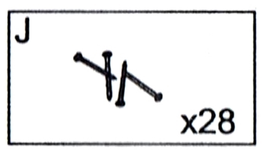
J
x28

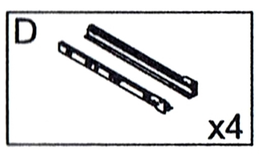
D
x4

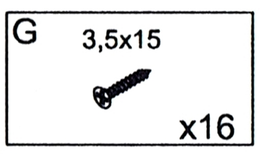
G
3,5x15
x16

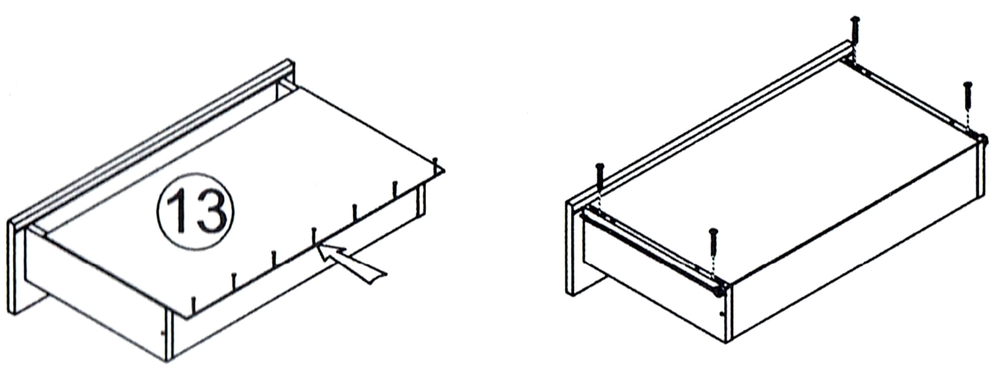
13

10

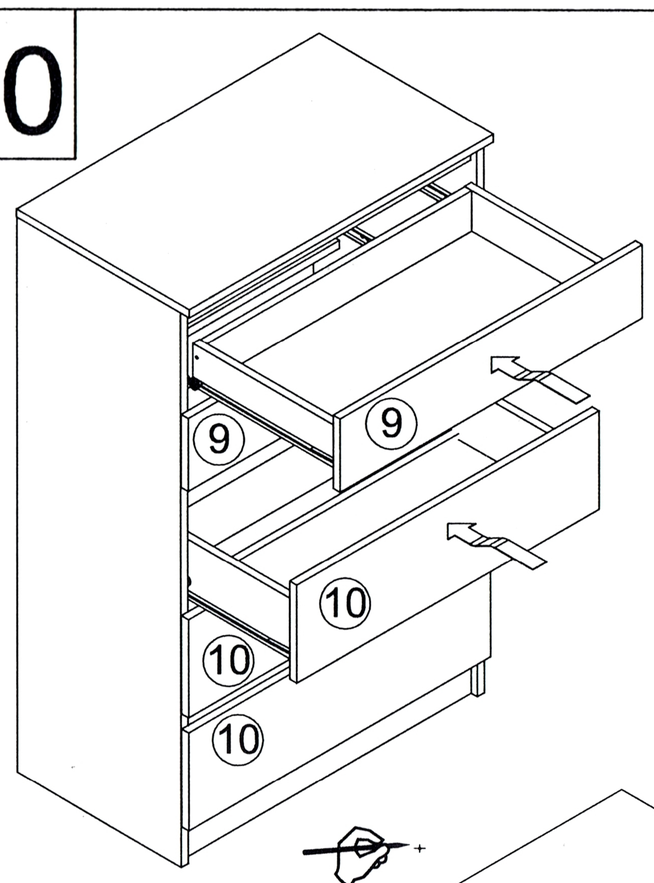
9
9
10
10
10

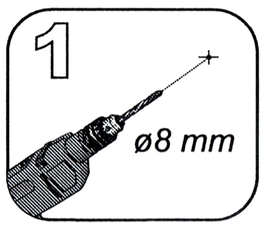
1
ø8 mm

2

x1

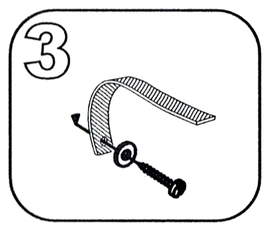
3

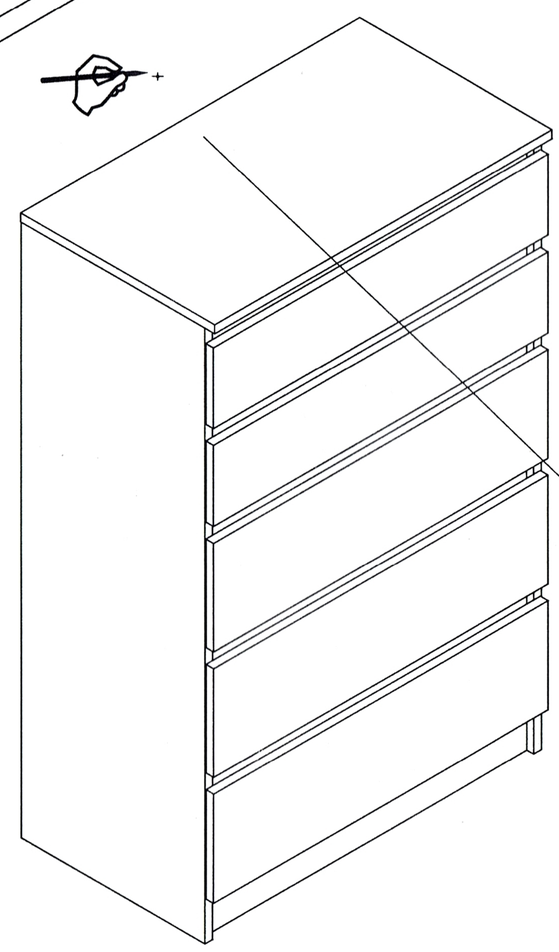

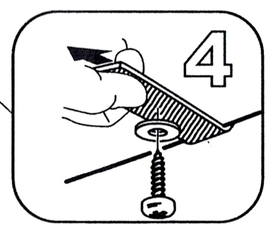
4