KINGSTON

TO ORDER PARTS, CALL: 1-877-252-7277
www.kingstonbrass.com

KS7800,1,5,8TPLBS

Single Handle Widespread Kitchen Faucet with Brass Sprayer

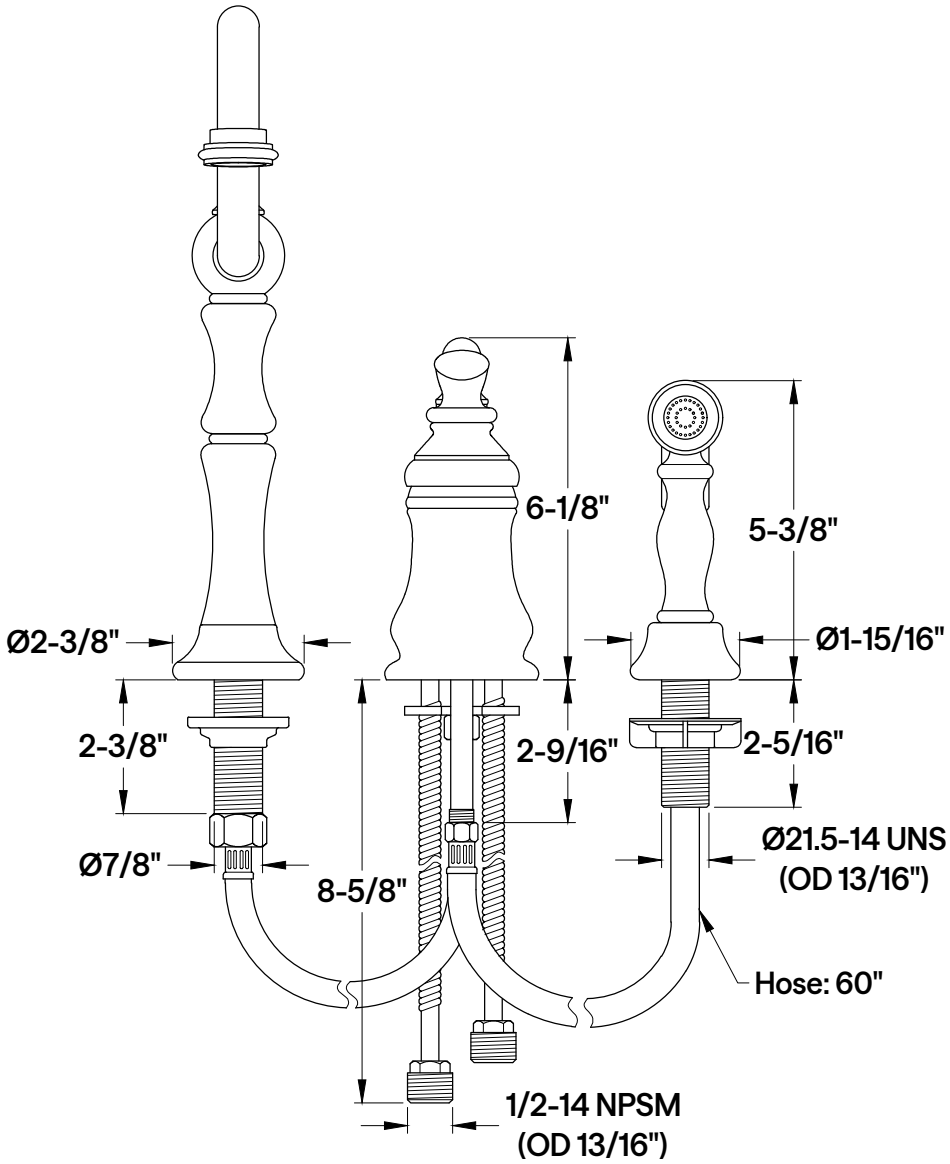

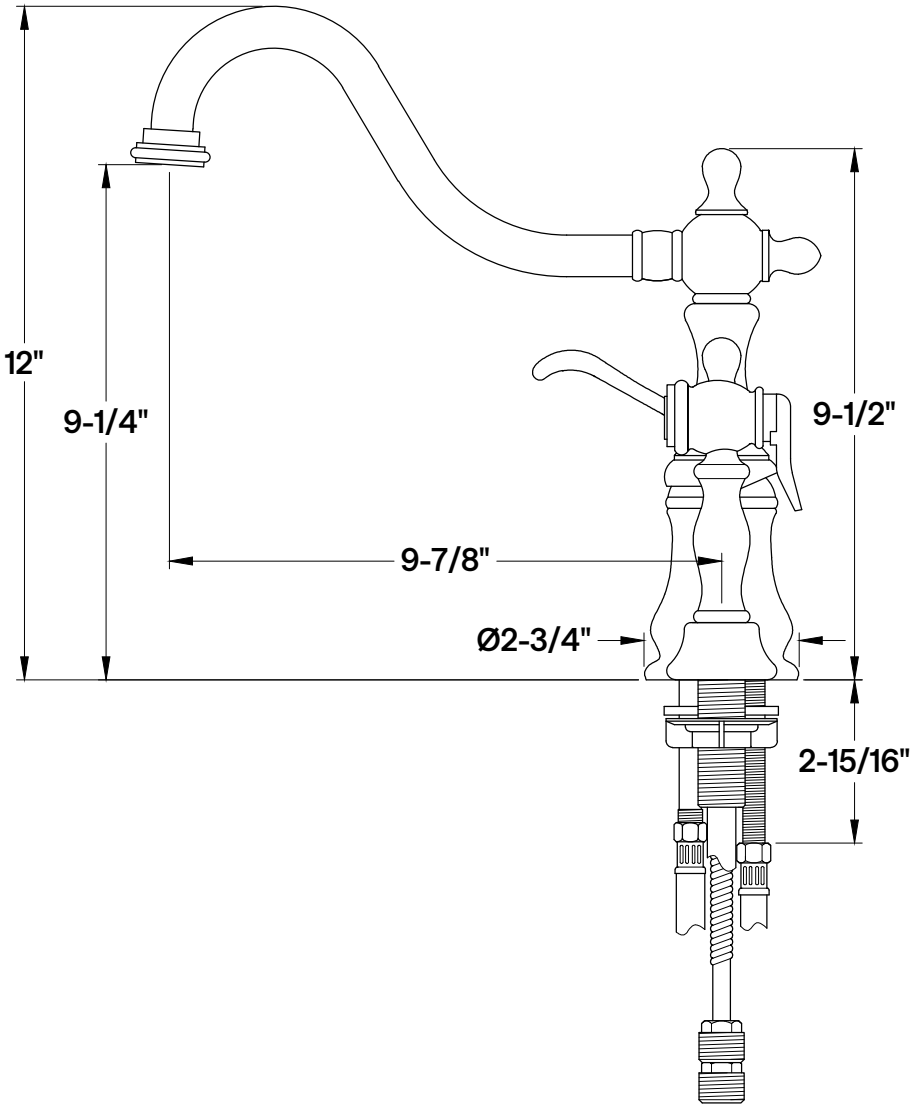

2025-10-C