Wood Platform Bed

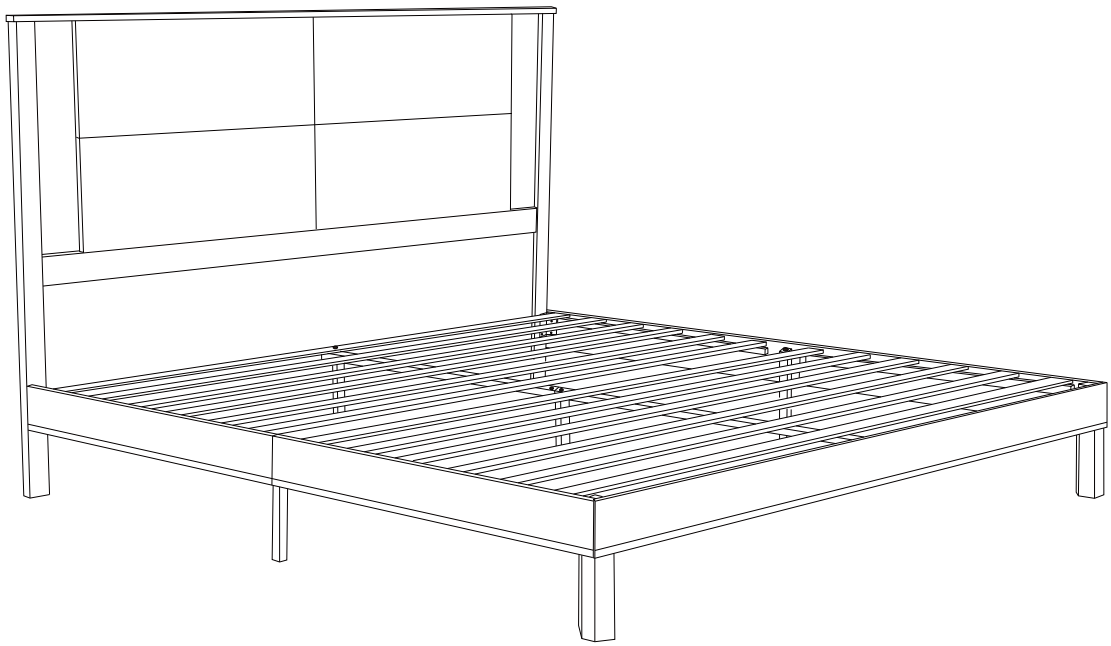

Dear Customers,

Thank you for purchasing our product. Please read this instruction manual carefully after receiving this product. It will help you assemble this product quickly, safely and correctly. You can keep this manual for future reference.

IMPORTANT

Please follow the instruction manuals and use a pad to protect the product during your assembly.

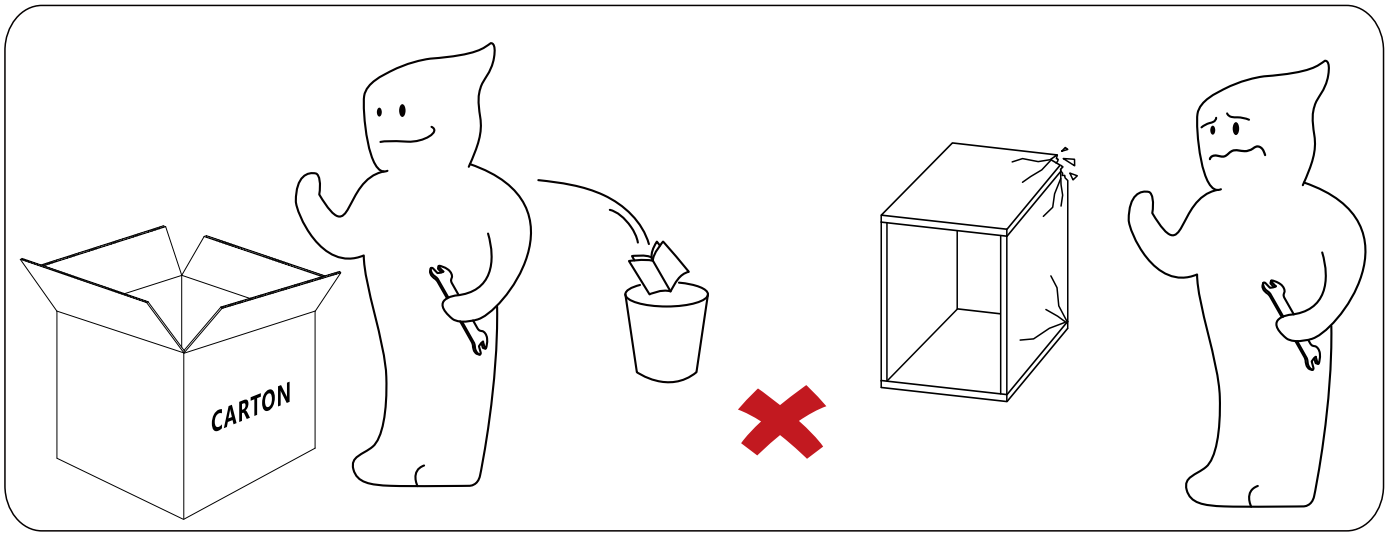

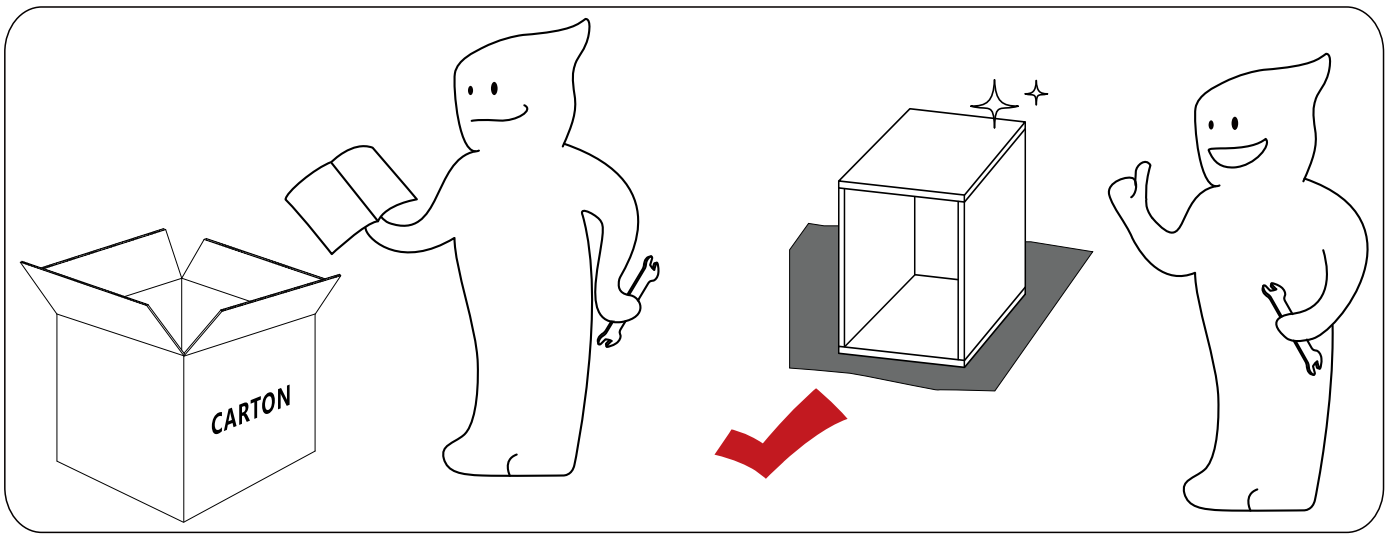

Note:
1. Should be assembled on flat ground to keep balance.
2. Before completing the installation, do not tighten the screws.
3.Finally,tighten all the screws manually.



For easier and better assembly, **2** or more adults are required.

ALPHABETICAL NUMBERING	DESCRIBE	ILLUSTRATION	NUMBER
A	Slat		1pc
B	Slat		1pc
C	Up headboard		1pc
C1	Headboard leg	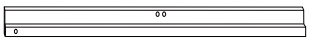	1pc
C2	Headboard leg	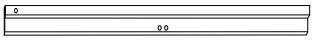	1pc
C3	Middle headboard		1pc
C5	Donwn headboard	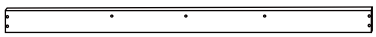	1pc
C6	Connector wood		3pcs
E	Footboard	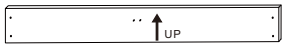	1pc
F1	Side panel	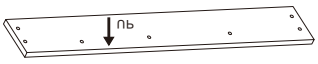	2pcs
F2	Side panel	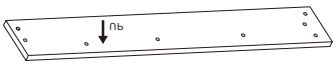	1pc
F3	Side panel	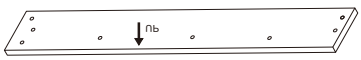	1pc
G	Support bar		1pc
H	Support bar		1pc
I	Support bar		1pc
J	Support wood		4pcs
K	Support leg		2pcs
L	Support leg		2pcs
M	Wood leg	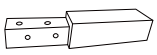	1pc
M1	Wood leg	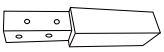	1pc

Ruler-Use this ruler to help correctly identify the screws.

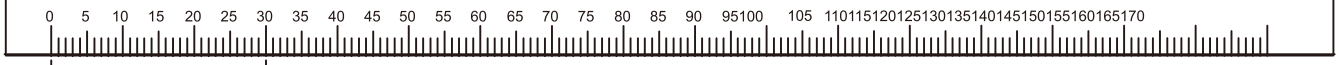

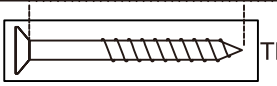

The length of the screw is measured from the rod part excluding the screw cap (30mm screw shown).

ALPHABETICAL NUMBERING	DESCRIBE	ILLUSTRATION	NUMBER
X	Connector plate 100x2 mm		2pcs
D	Connector plate 30x2 mm		4pcs
T	Connector plate 70x2 mm		2pcs
O	Sponge-cushion		4pcs
P	Washer φ8x18x1.5 mm		46pcs+1pc
P1	Washer φ6x18x1.5 mm		18pcs
Q	Wrench M6		1pc
R	Screw M8x50 mm		9pcs
R1	Screw M8x35 mm		5pcs
R2	Screw M8x30mm		12pcs
R3	Screw M8x14mm		20pcs+1pc
R4	Screw M6x25 mm		6pcs
R5	Screw M6x14 mm		16pcs
S		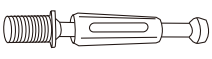	6pcs
S1			6pcs

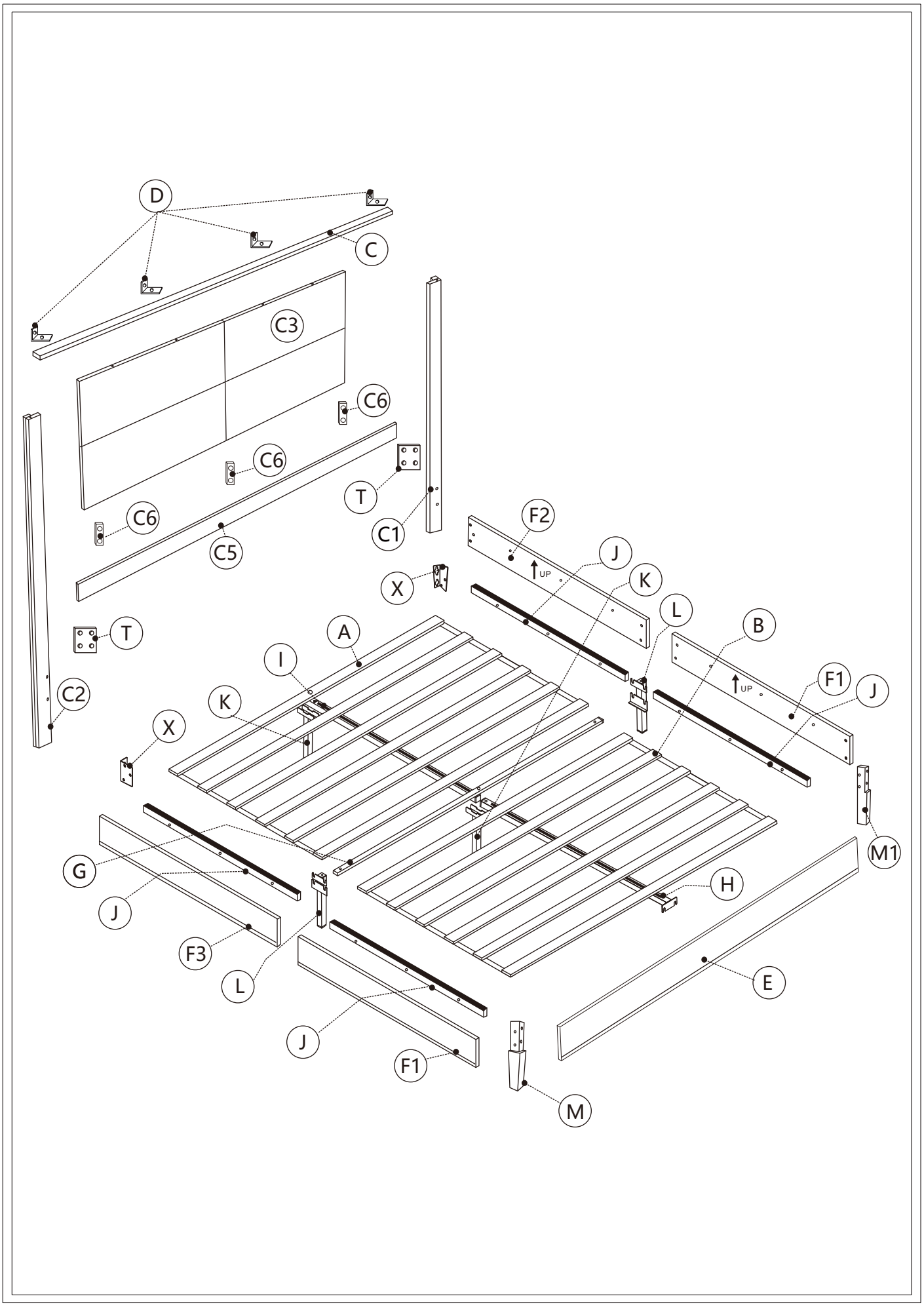
D
C
C3
C6
C6
T
C6
C1
C5
F2
J
UP
K
X
L
B
T
A
I
F1
J
UP
C2
K
X
M1
G
H
J
F3
L
E
J
F1
M

1

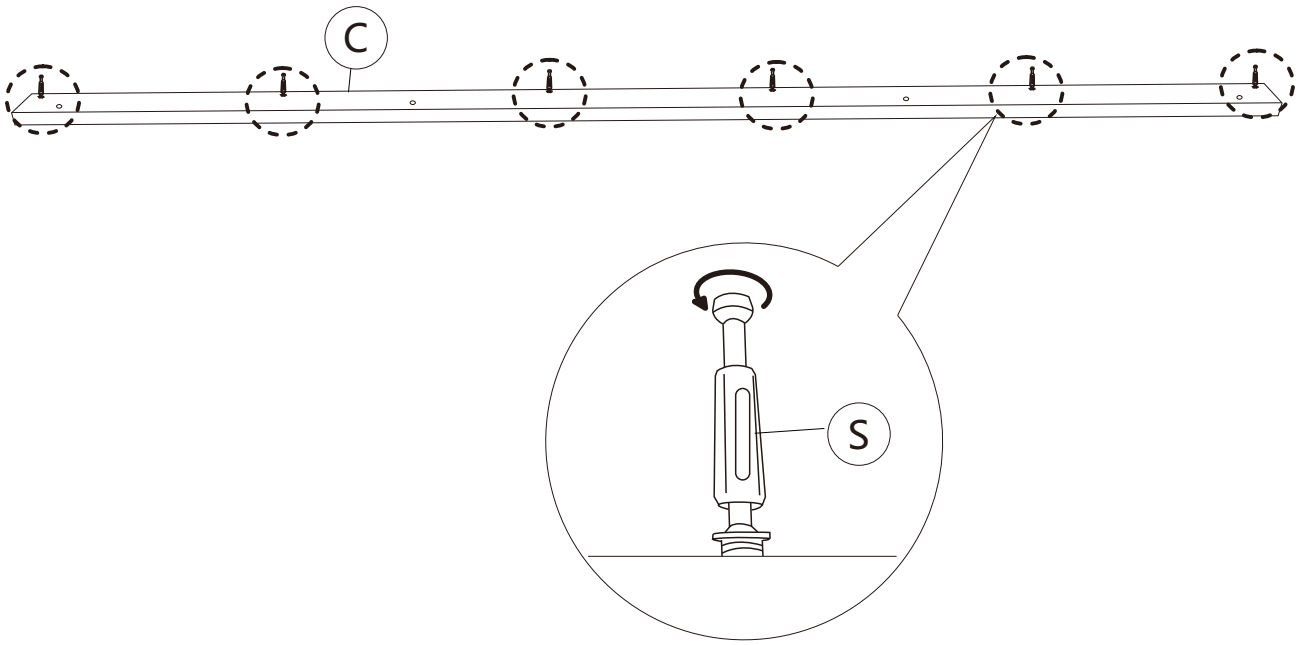

S 6pcs

2

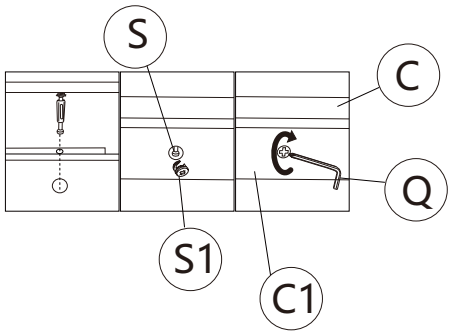

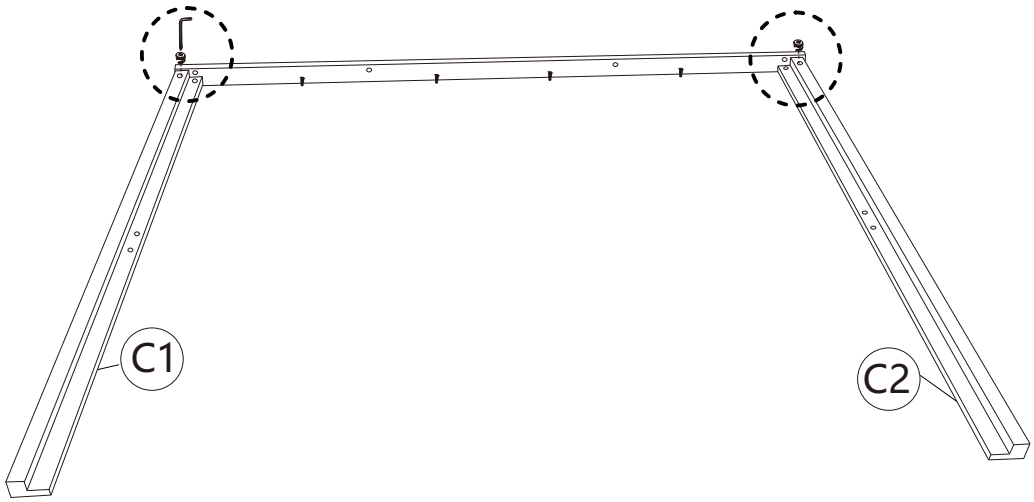

S1 2pcs

Q M6 1pc

3

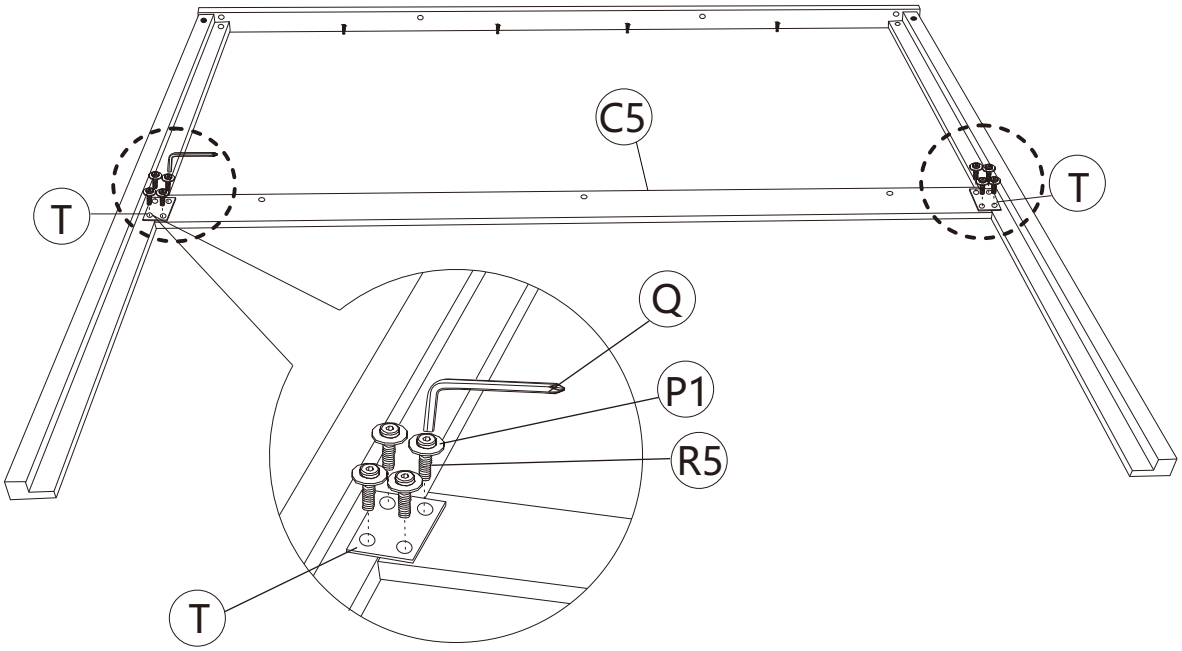

T 70x2 mm		2pcs
R5 M6x14 mm		8pcs
P1 φ6x18x1.5 mm		8pcs
Q M6		1pc

4

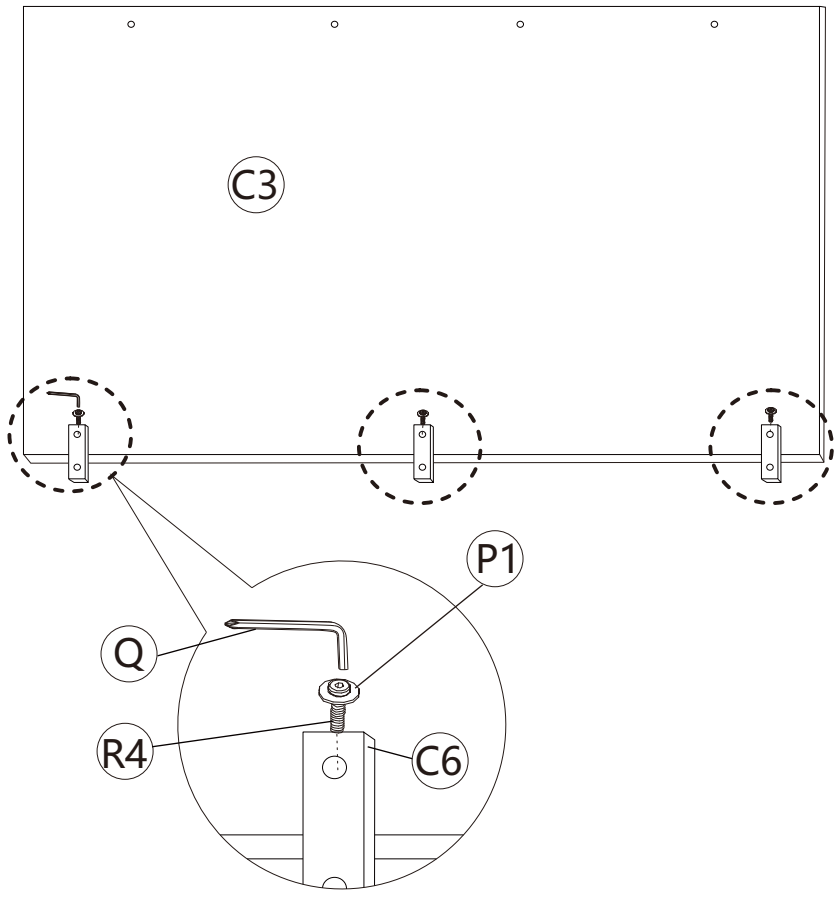

R4 M6x25 mm		3pcs
P1 φ6x18x1.5 mm		3pcs
Q M6		1pc

5

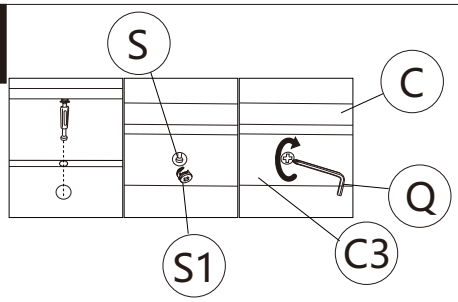

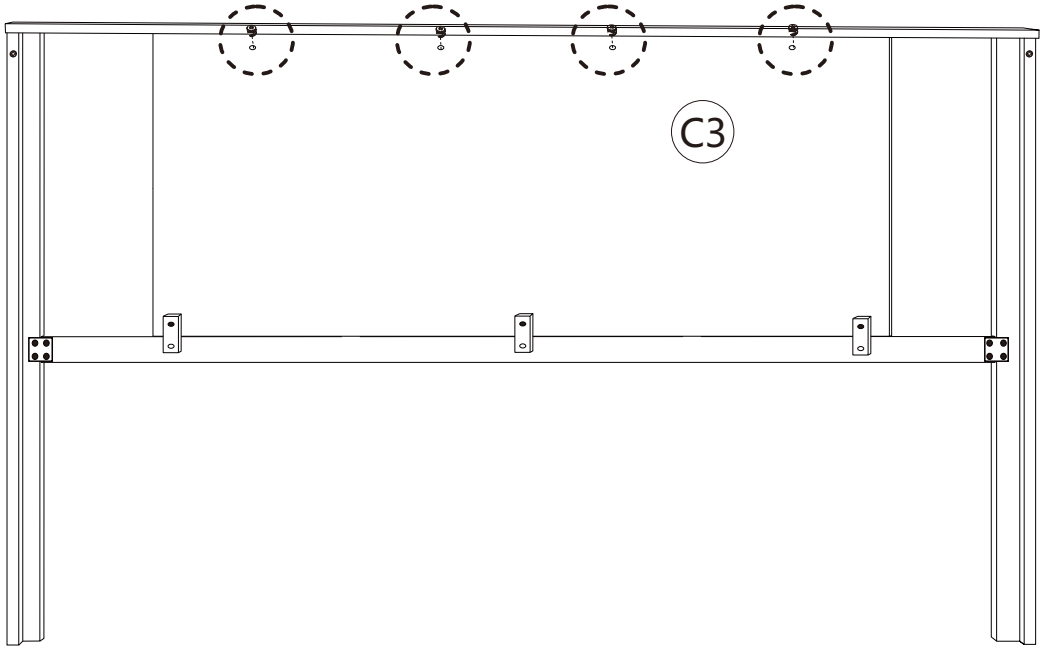

S1		4pcs
Q M6		1pc

6

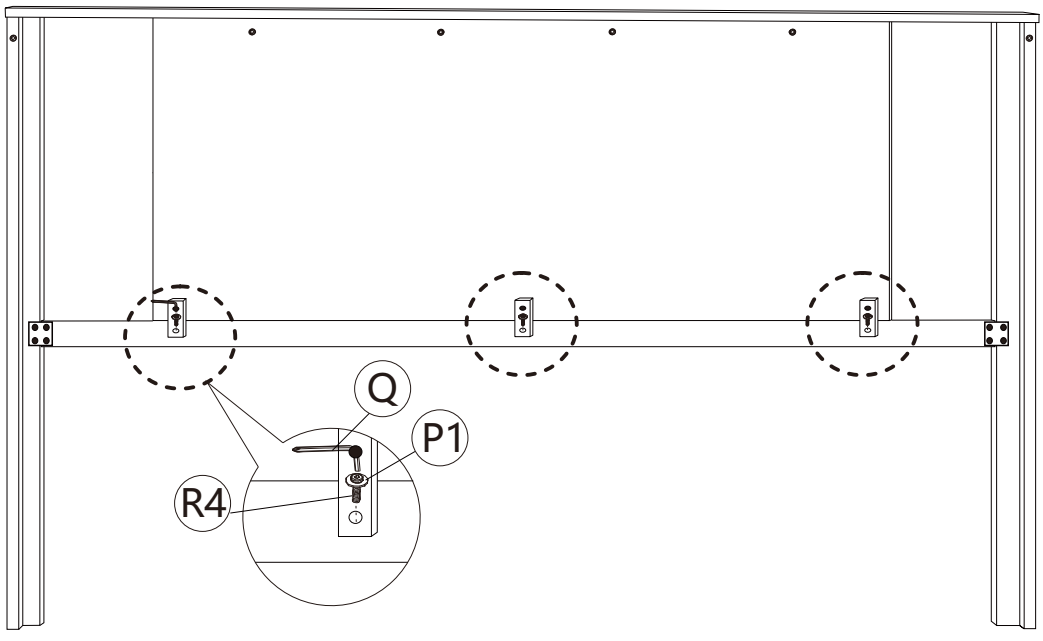

R4 M6x25 mm		3pcs
P1 φ6x18x1.5 mm		3pcs
Q M6		1pc

7

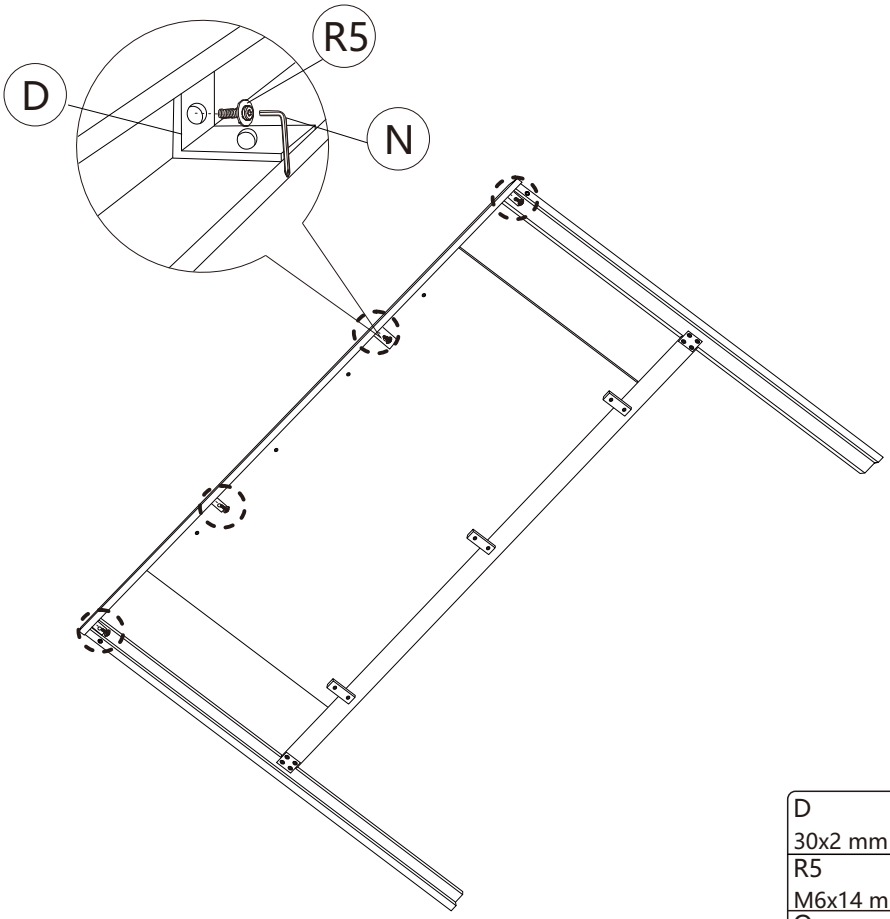

D 30x2 mm		4pcs
R5 M6x14 mm		4pcs
Q M6		1pc

8

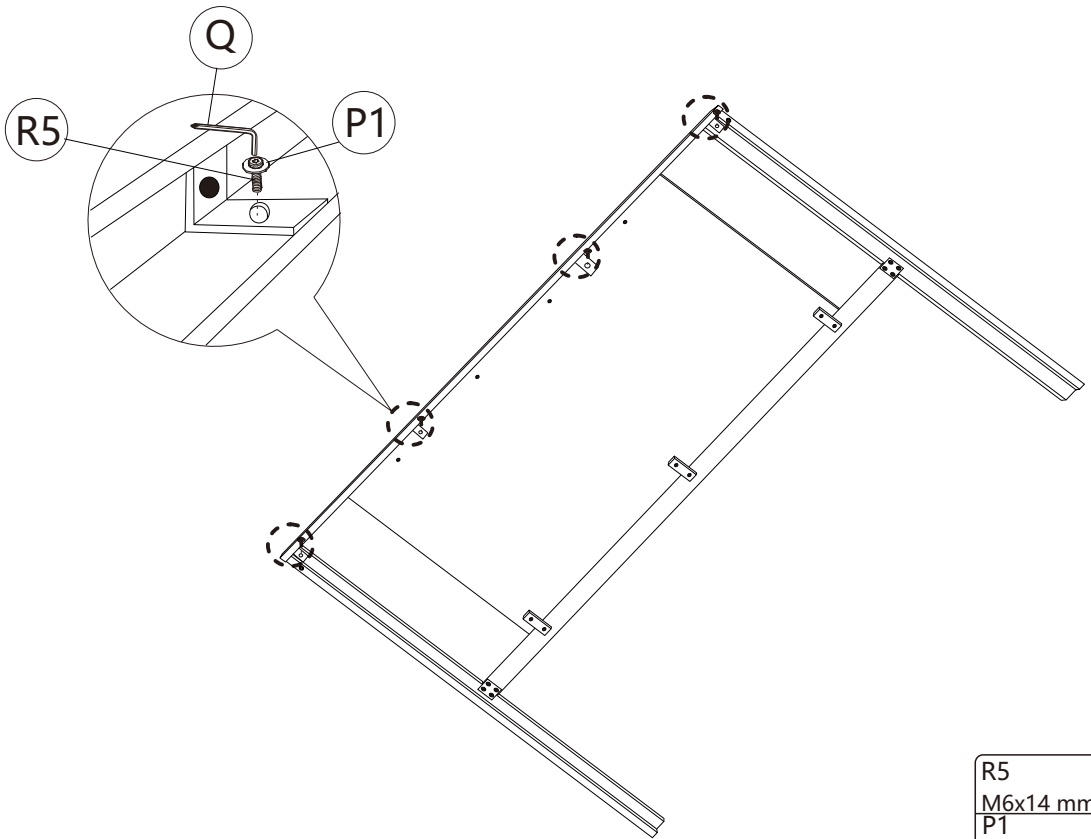

R5 M6x14 mm		4pcs
P1 φ6x18x1.5 mm		4pcs
Q M6		1pc

9 Take out parts F1 and F3, and lock the iron frame foot L in the middle according to the figure. Note that there are **2 holes** located on the inner side of the board. Then lock the bed hanging piece X on the front and rear of the board, with **3 holes** on each side.

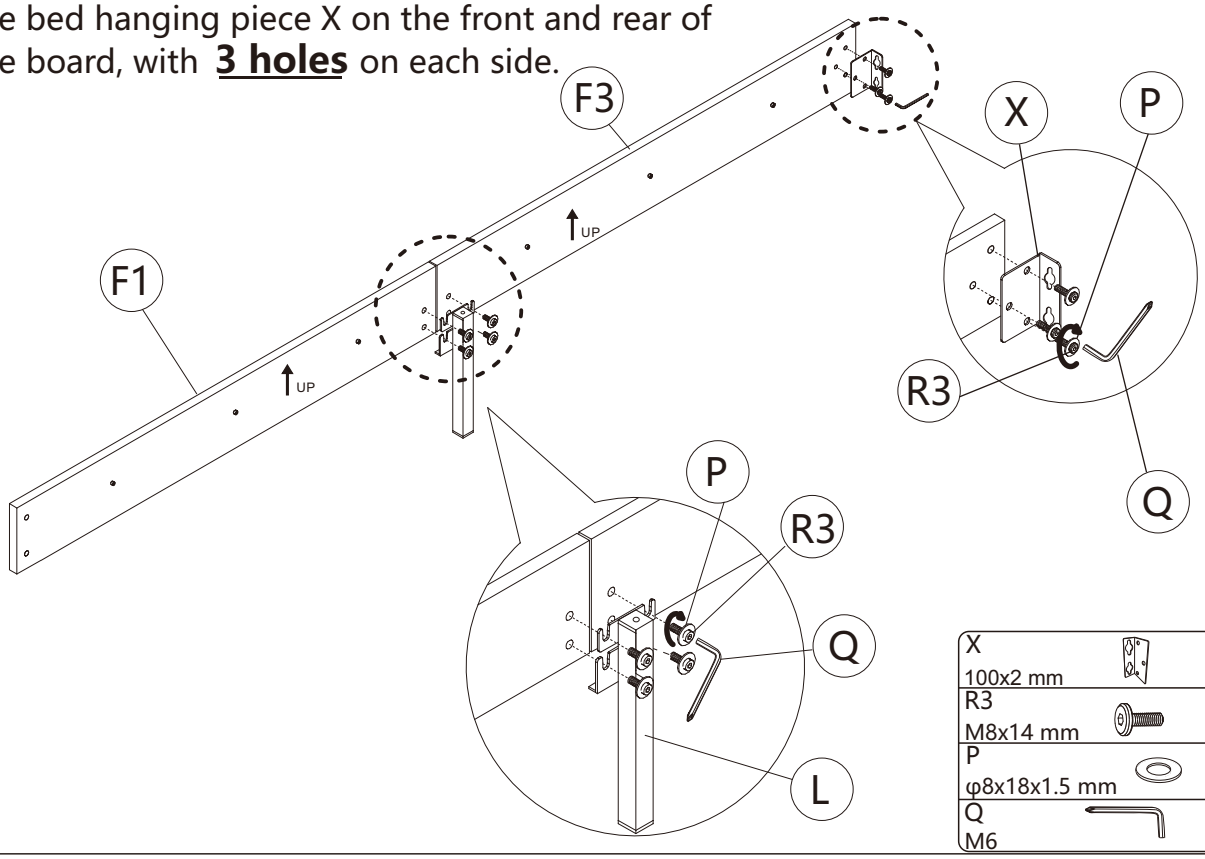

X 100x2 mm		1pc
R3 M8x14 mm		7pcs
P φ8x18x1.5 mm		7pcs
Q M6		1pc

10 Same as Step 9.

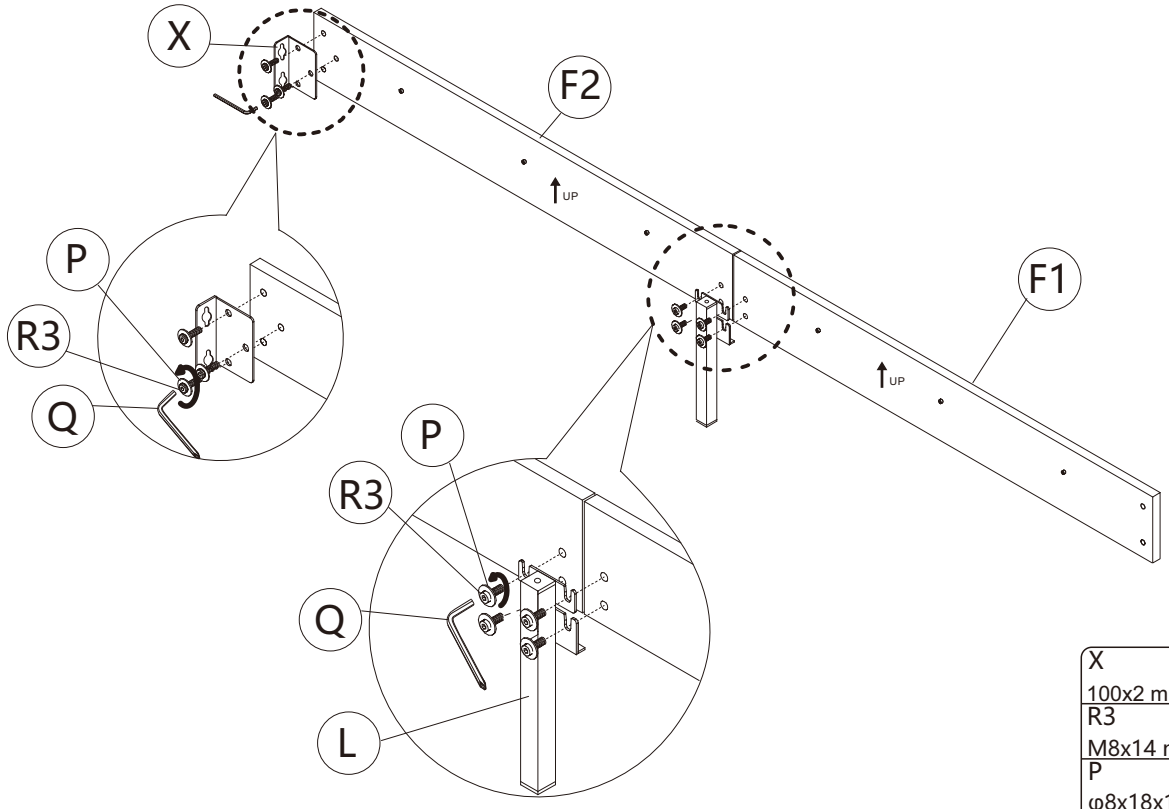

X 100x2 mm		1pc
R3 M8x14 mm		7pcs
P φ8x18x1.5 mm		7pcs
Q M6		1pc

11

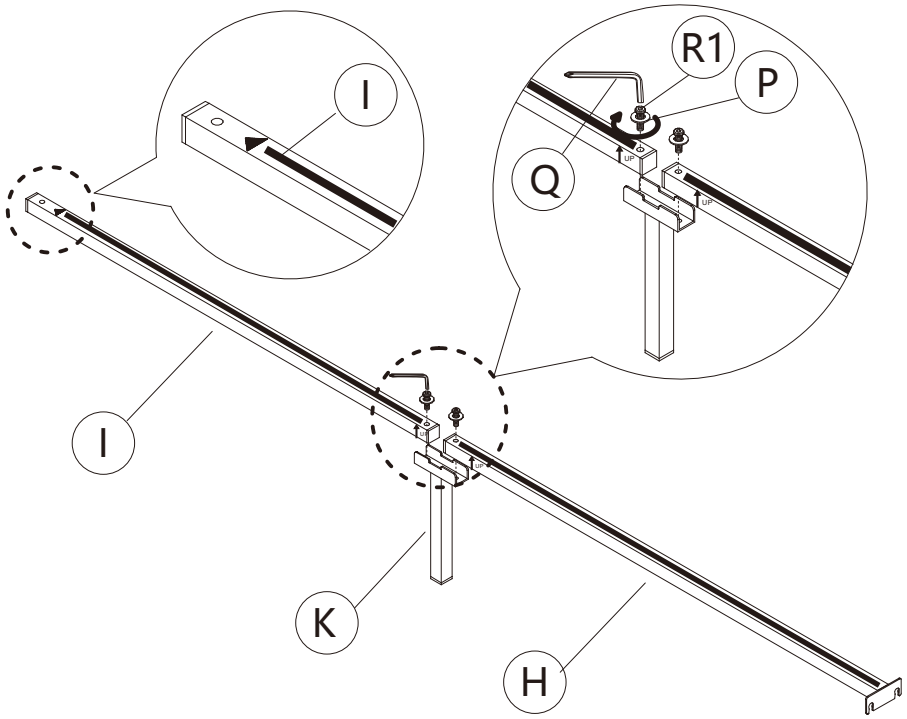

R1 M8x35 mm		2pcs
P φ8x18x1.5 mm		2pcs
Q M6		1pc

12

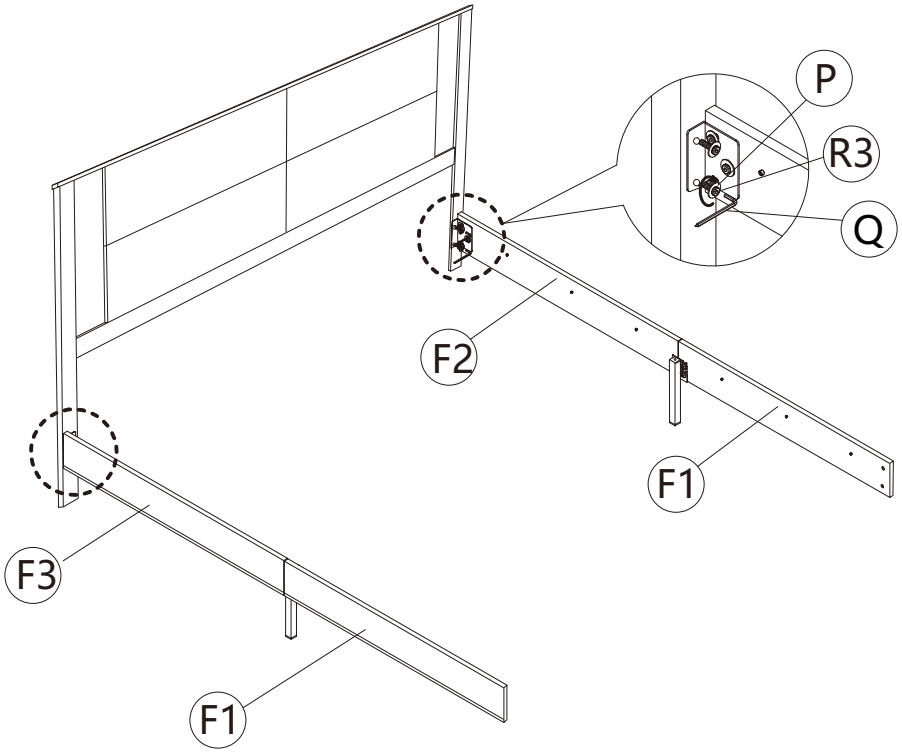

R3 M8x14 mm		4pcs
P φ8x18x1.5 mm		4pcs
Q M6		1pc

13

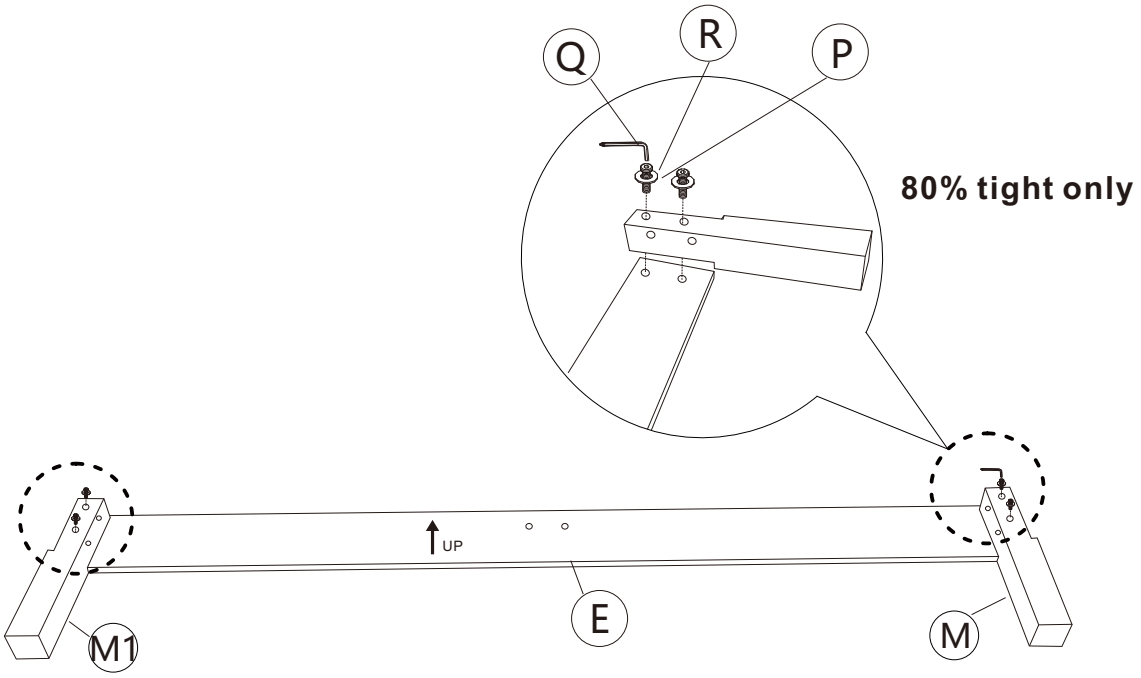

R M8x50 mm		4pcs
P φ8x18x1.5 mm		4pcs
Q M6		1pc

14

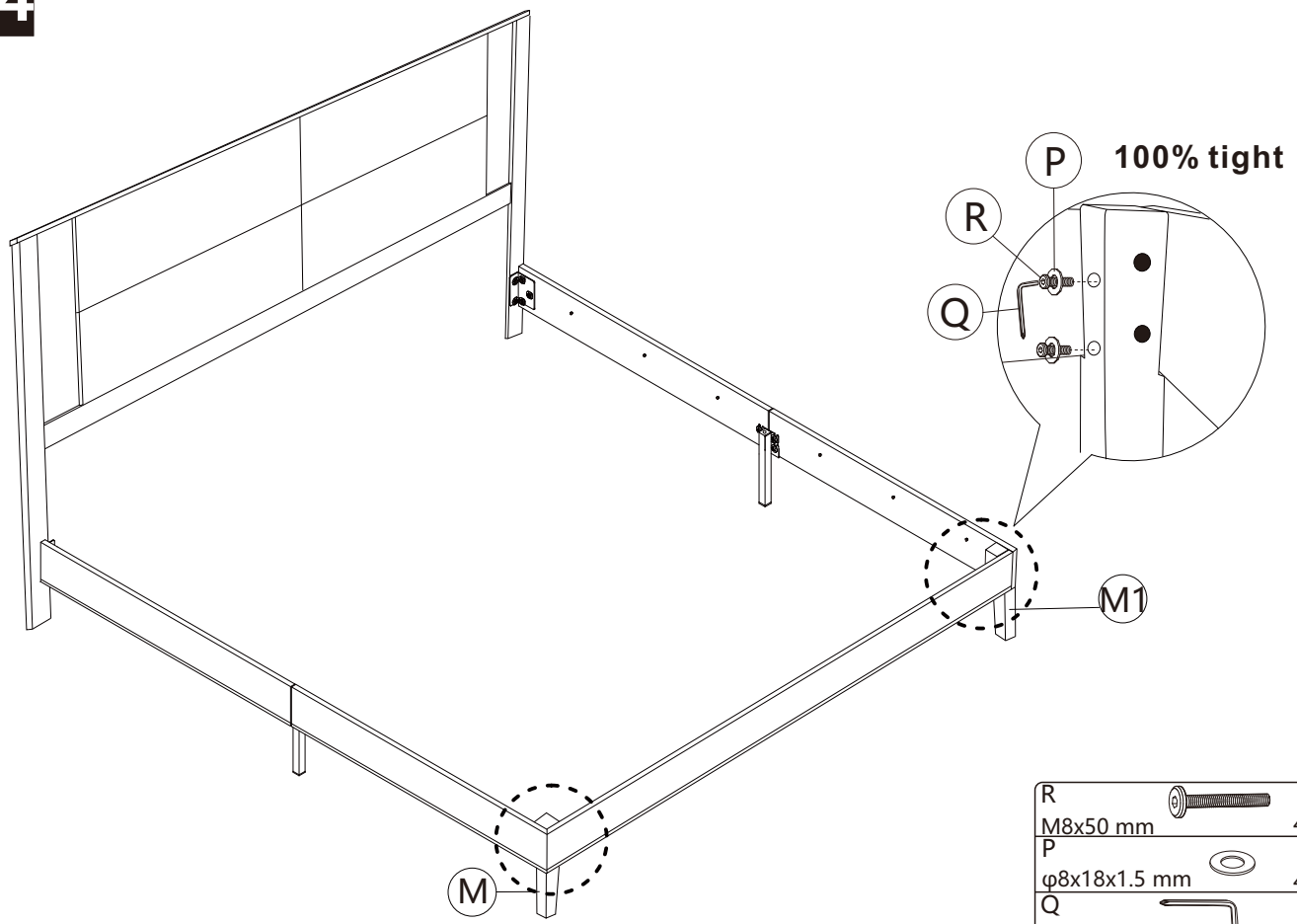

R M8x50 mm		4pcs
P φ8x18x1.5 mm		4pcs
Q M6		1pc

15

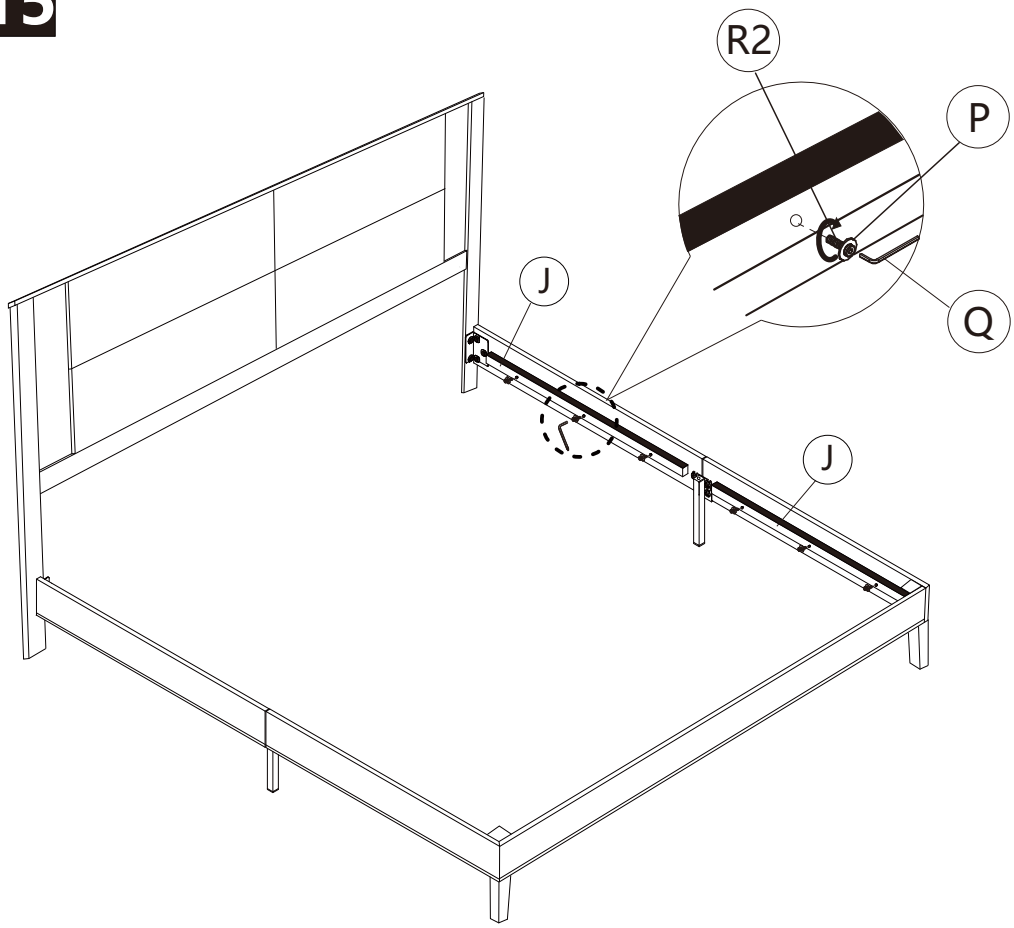

R2 M8x30 mm		12pcs
P φ8x18x1.5 mm		12pcs
Q M6		1pc

16

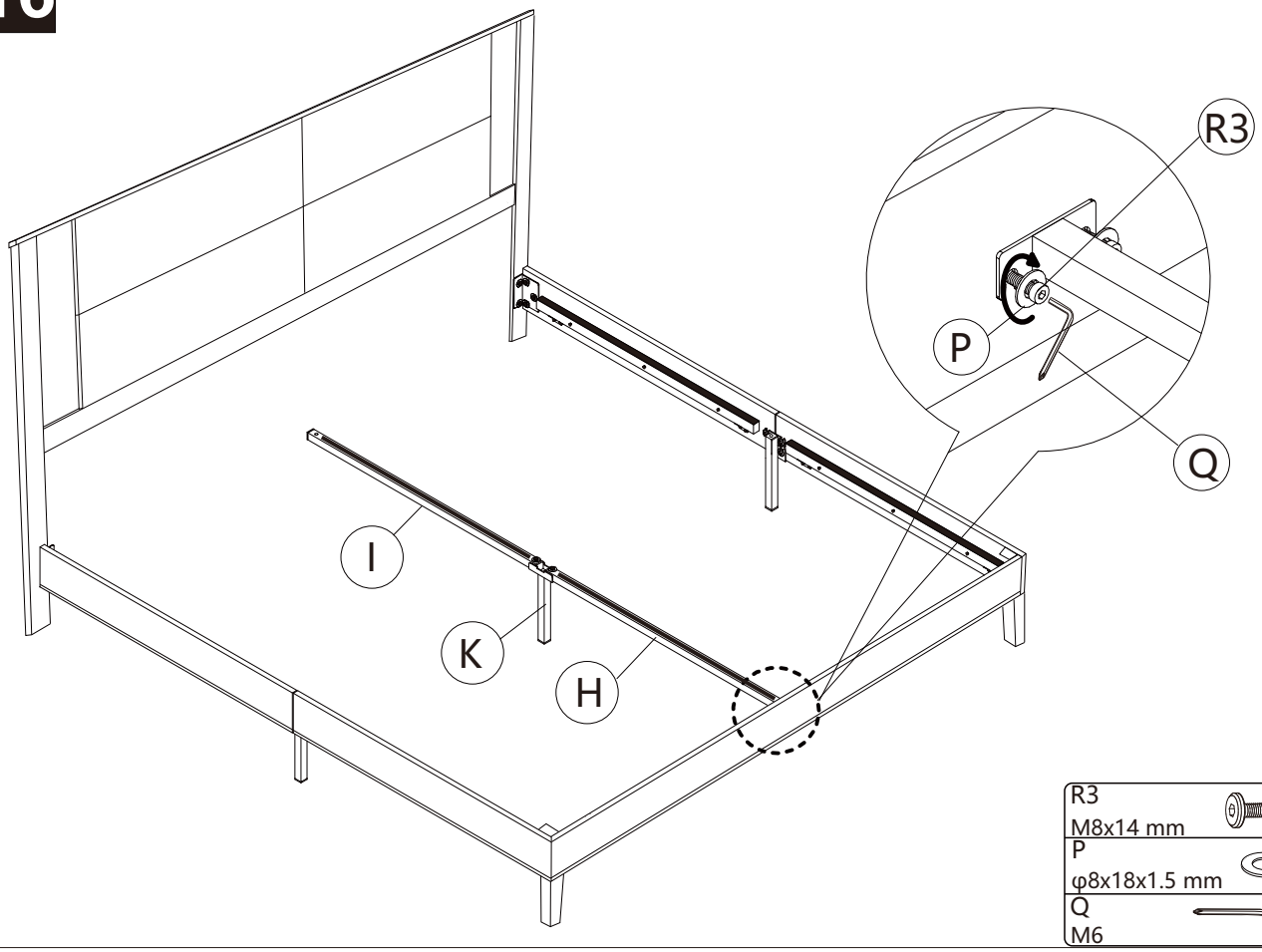

R3 M8x14 mm		2pcs
P φ8x18x1.5 mm		2pcs
Q M6		1pc

17

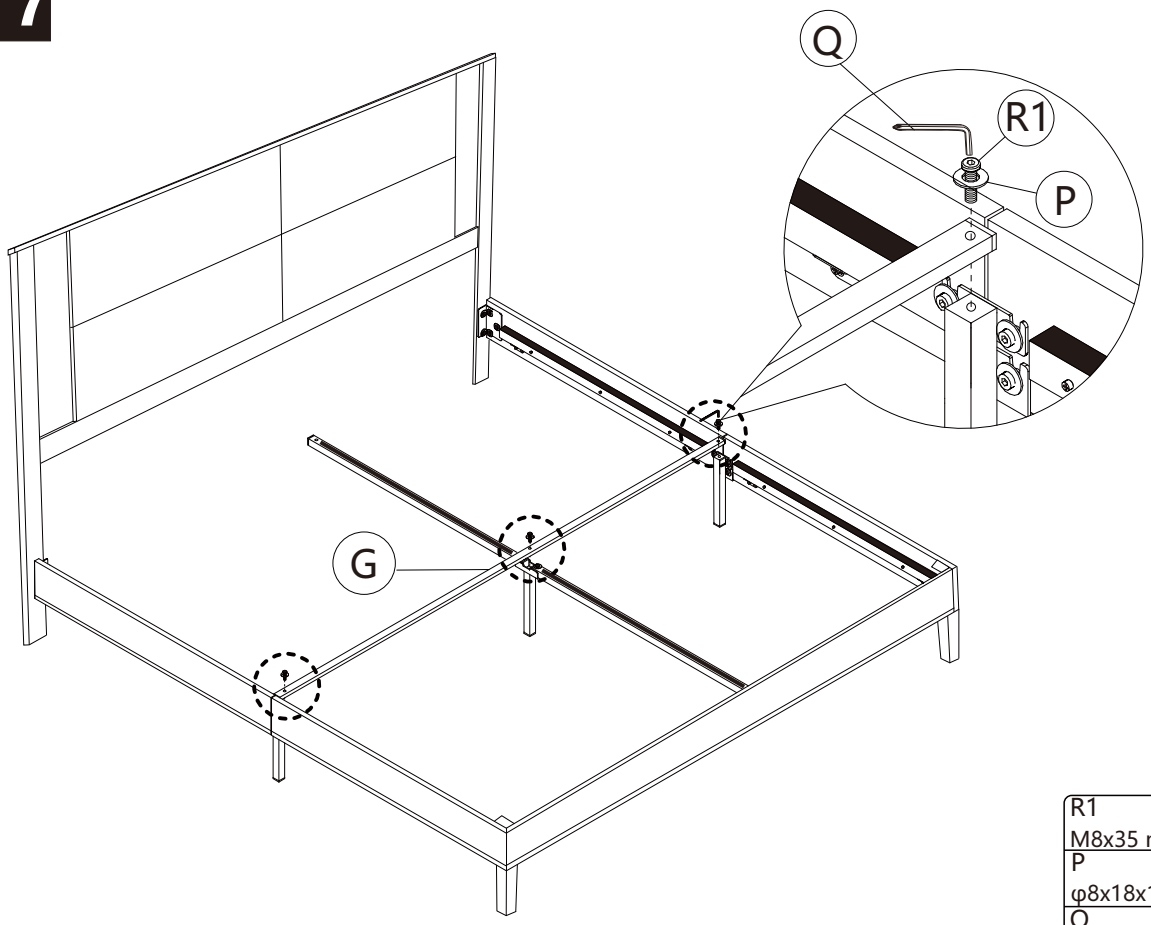

R1 M8x35 mm	3pcs
P φ8x18x1.5 mm	3pcs
Q M6	1pc

18 Note that there is a slat with a hole in part A for connecting to part K.

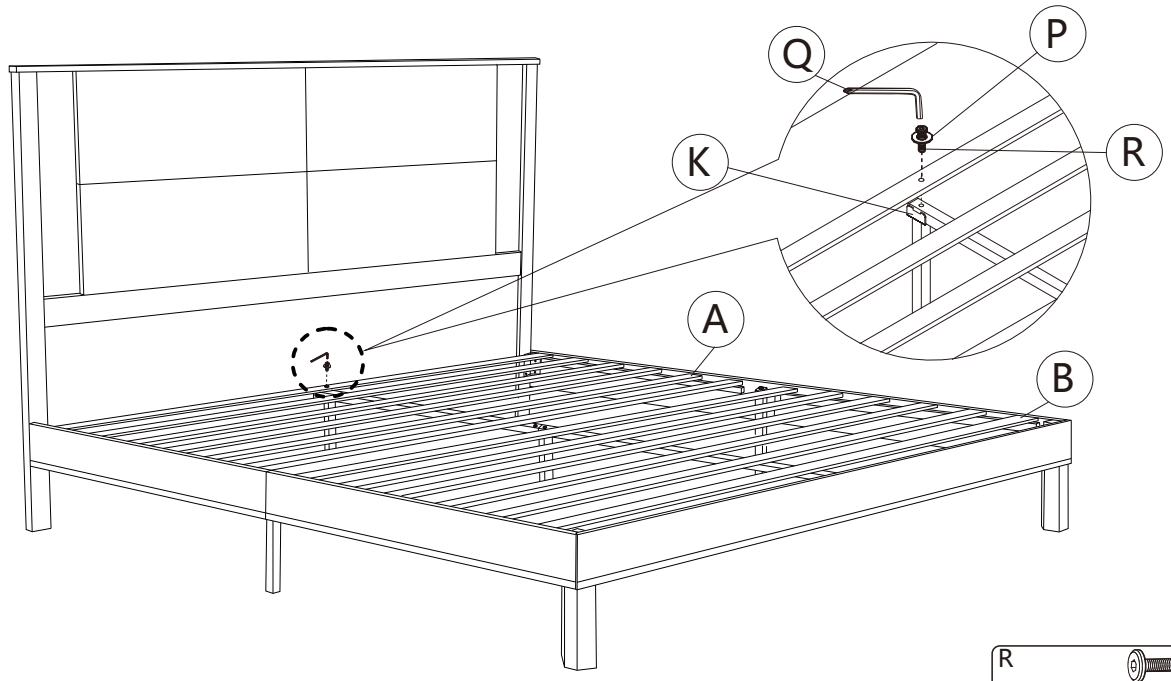

R M8x50 mm	1pc
P φ8x18x1.5 mm	1pc
Q M6	1pc

Pls make sure that all screws are 100% tight.

19 Stick **O** on the back to avoid noice.

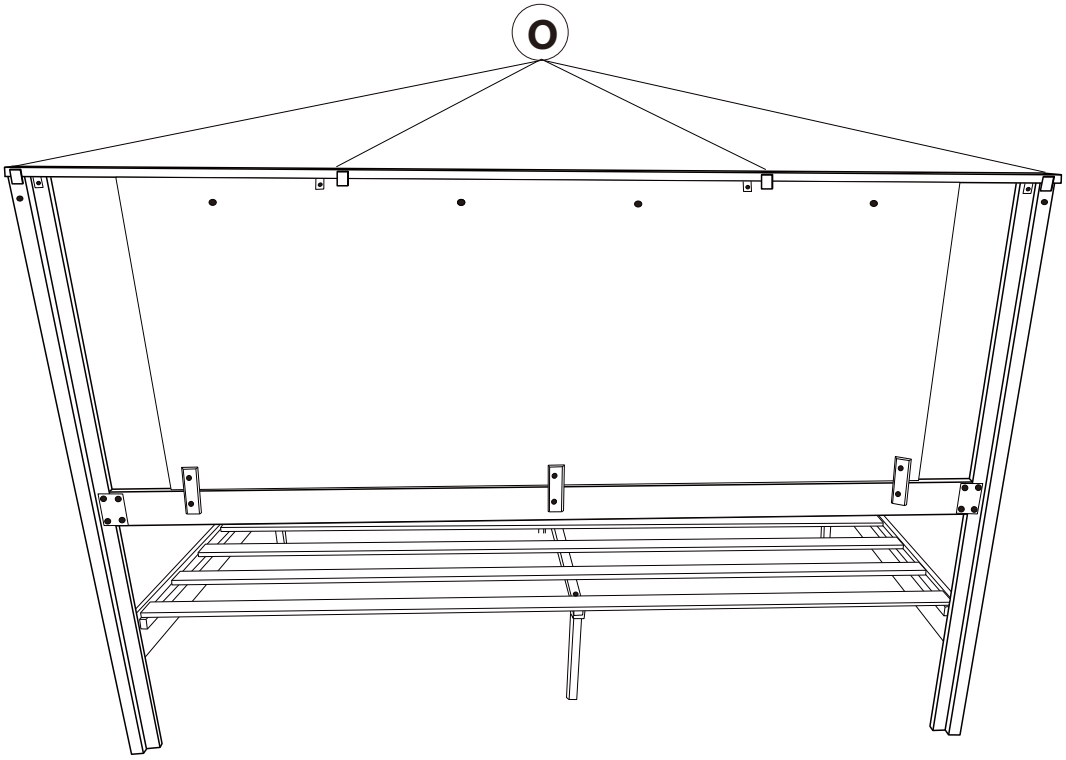

20

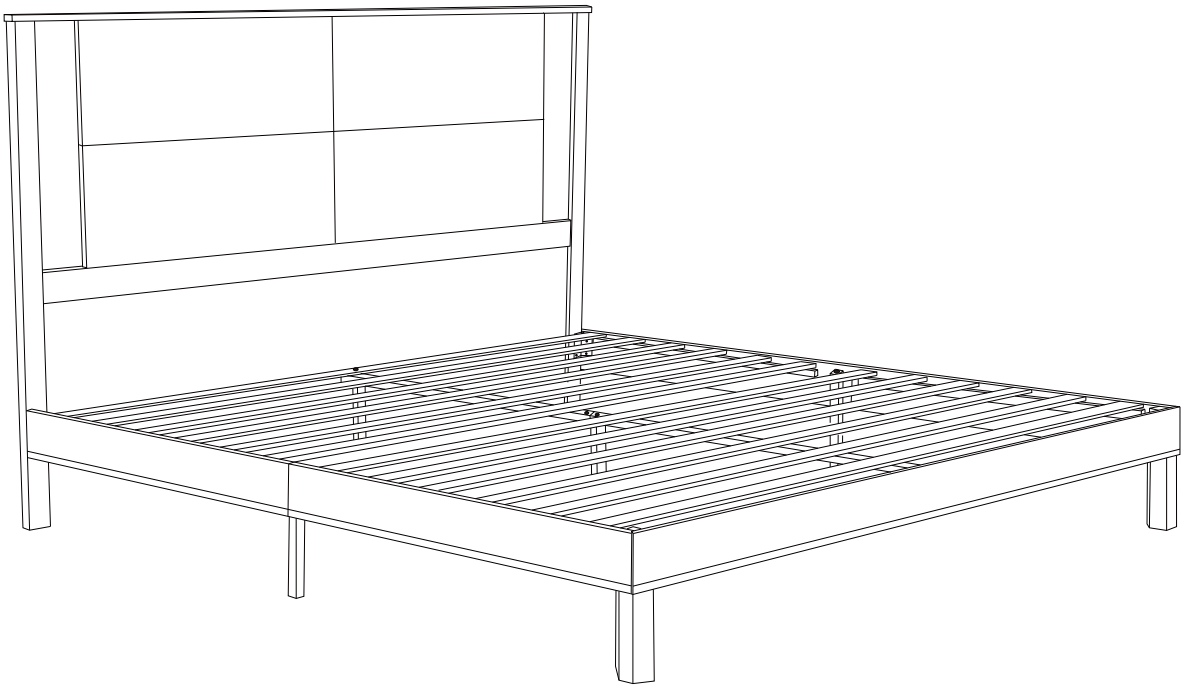

Installation Complete