STORAGE CABINET

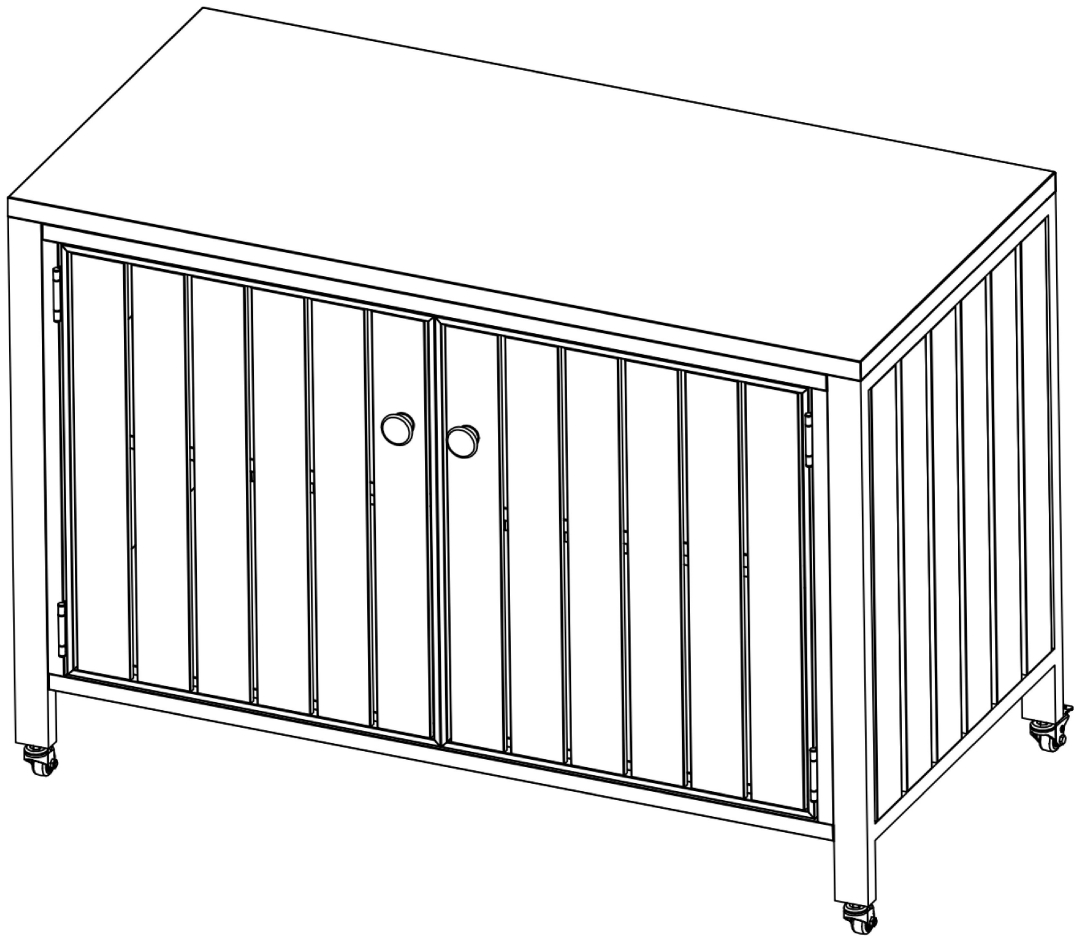

Before You Start

Please read the instructions carefully to familiarize yourself with every detail and step involved. Keep this manual for future reference. Find a suitable space to assemble.

Important Notes

Small parts are included; we advise you to keep them away from children and pets.

NO.	PARTS	DESCRIPTION	QTY
A	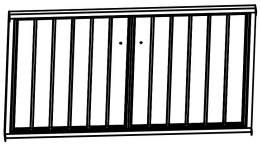	Front Door Panel	1
B	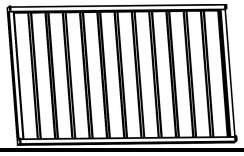	Back Panel	1
C	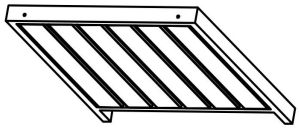	Side Panel	2
D	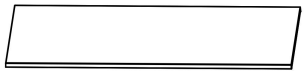	Shelf Panel	2
E		Top Panel	1
F		Door Handle	2
G	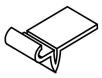	Shelf Bracket Positioning Pin	4
H	 M4x8MM	Door Handle Installation Screw	2
I	 M6x10MM M6x35MM	Installation Screw	8PCS 4PCS
J	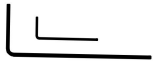	Allen Wrench	2
K	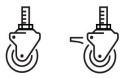	Casters (Includes K1 & K2)	4

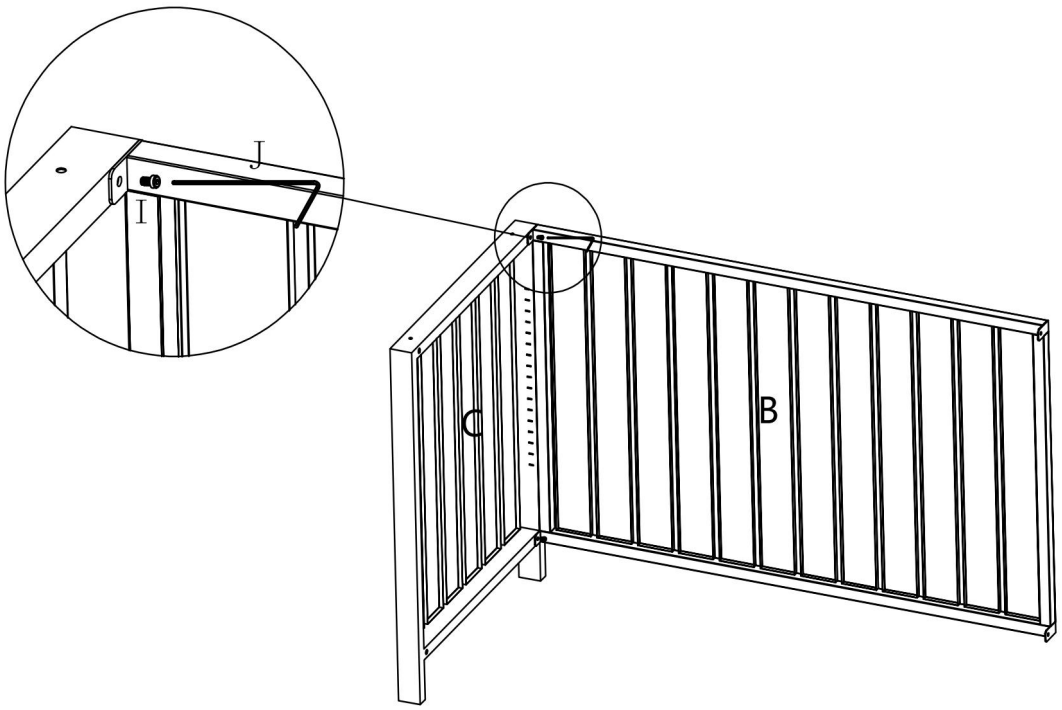

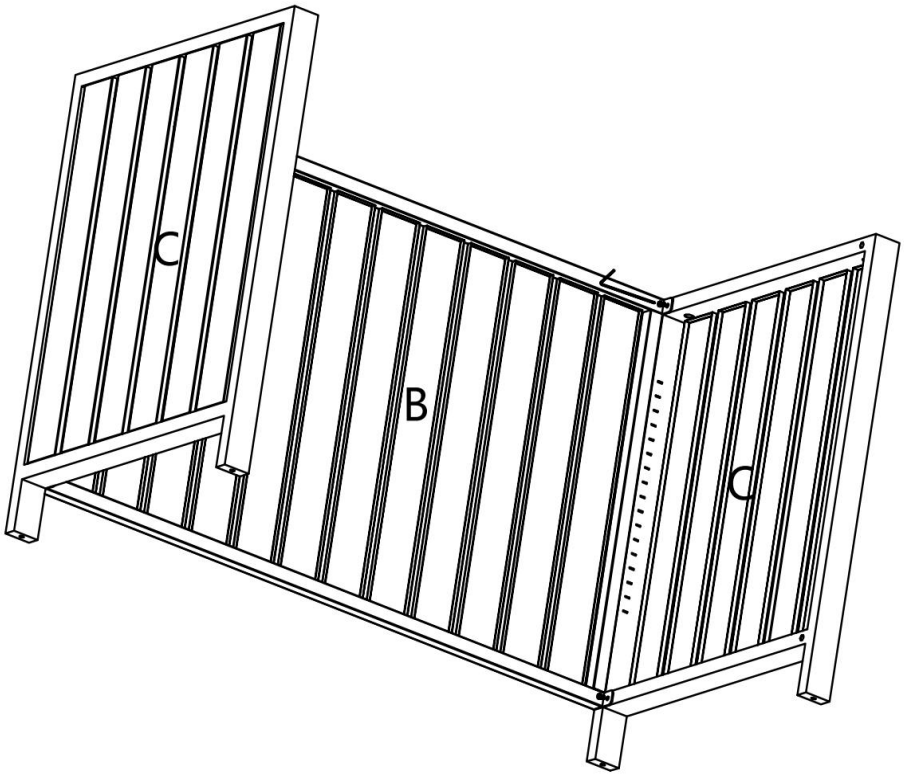

Attach the two Side Panels (C) to the Back Panel (B)
using the Installation Screws (I)M6x10MM .

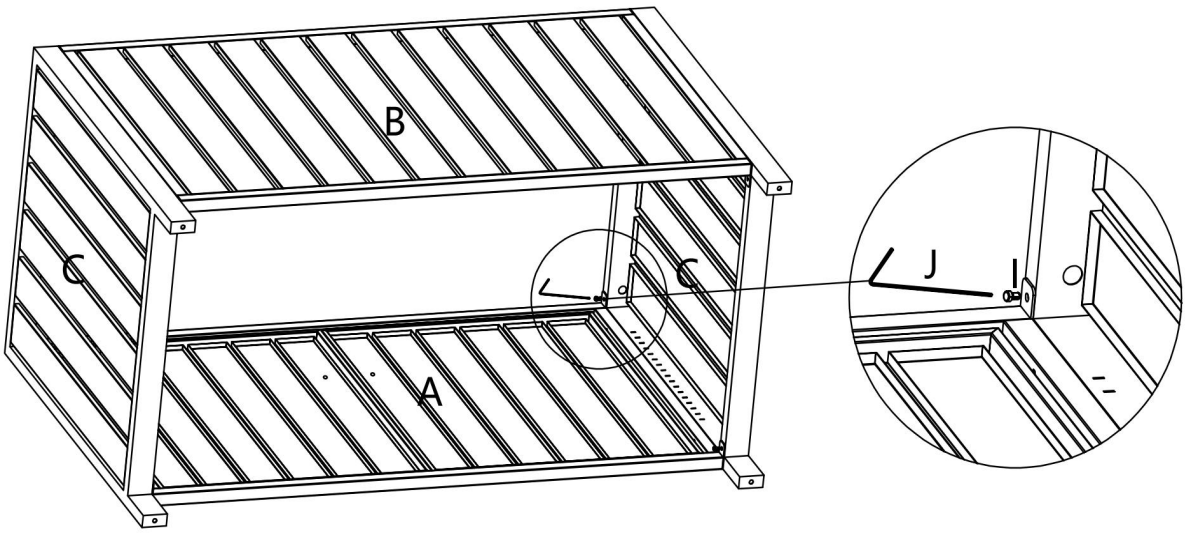

Align the assembled back/side frame over the Front Door Panel (A) and secure it using the Installation Screws (I)M6x10MM .

Next, insert the Casters (K1 and K2) into the bottom of the Side Panel legs.

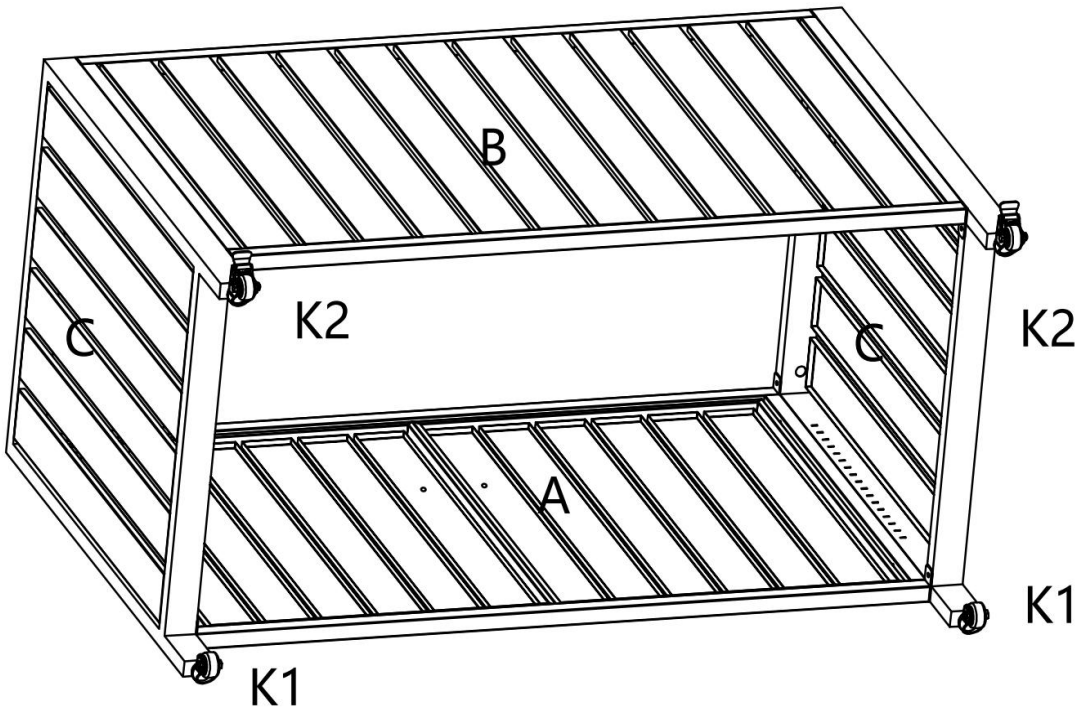

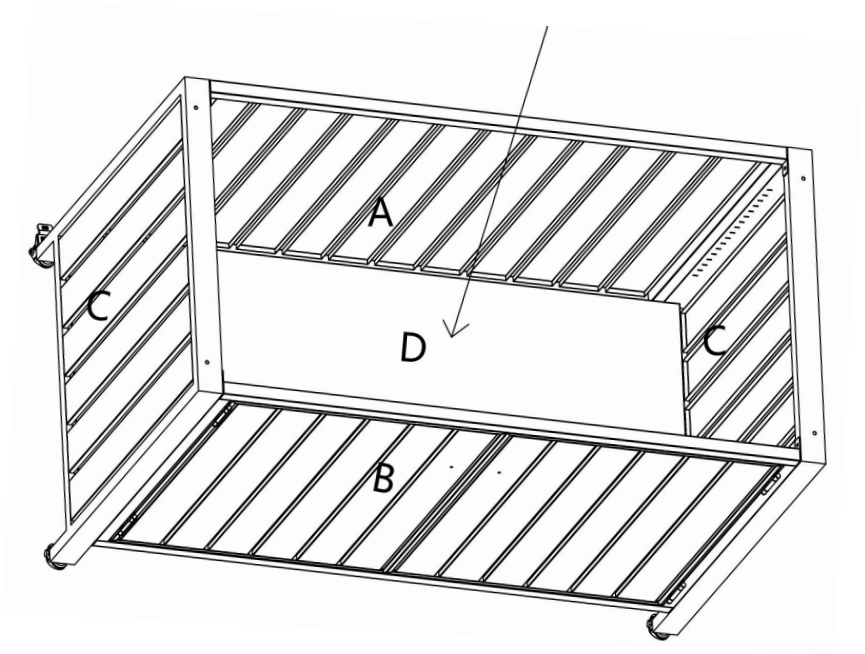

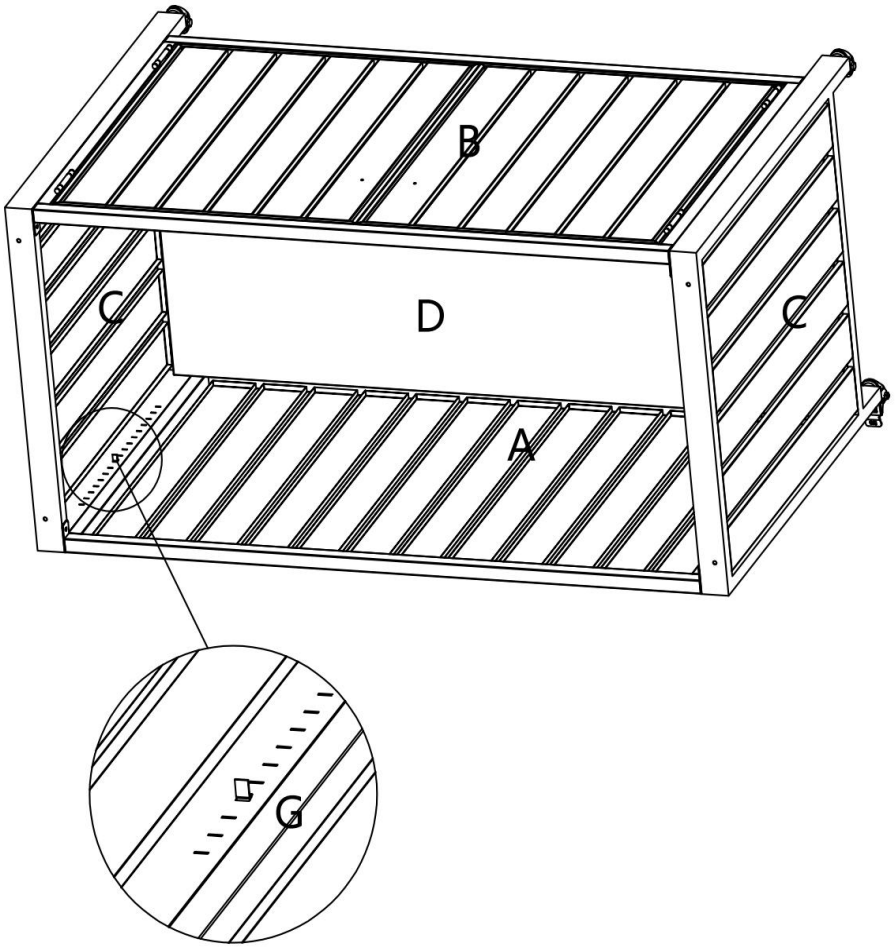

Insert the Shelf Bracket Positioning Pin (G) into the pre-drilled holes on the inside of the Side Panels (C).

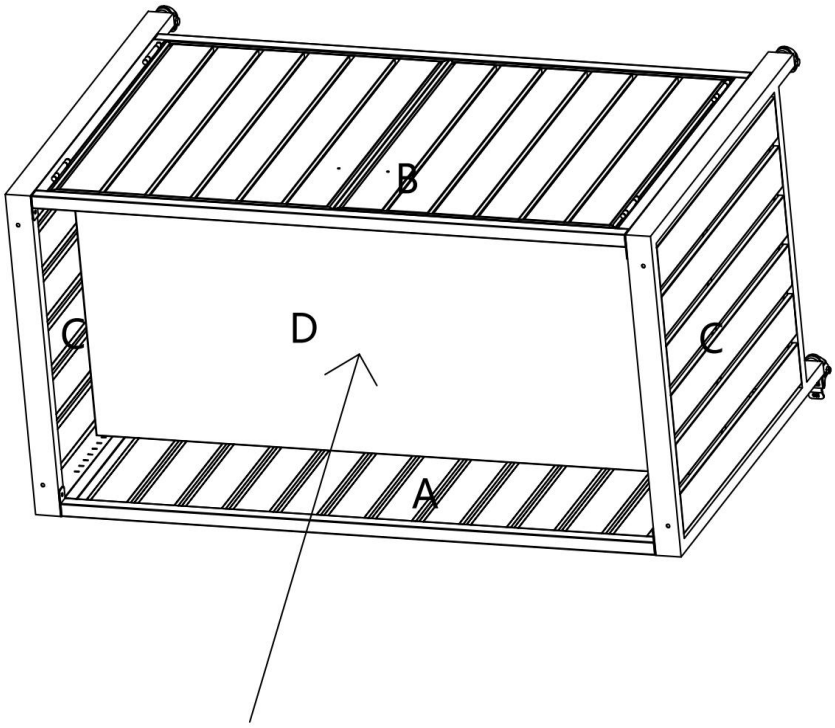

Place the Shelf Panels (D) evenly onto the brackets.

Place the Top Panel (E) onto the cart.

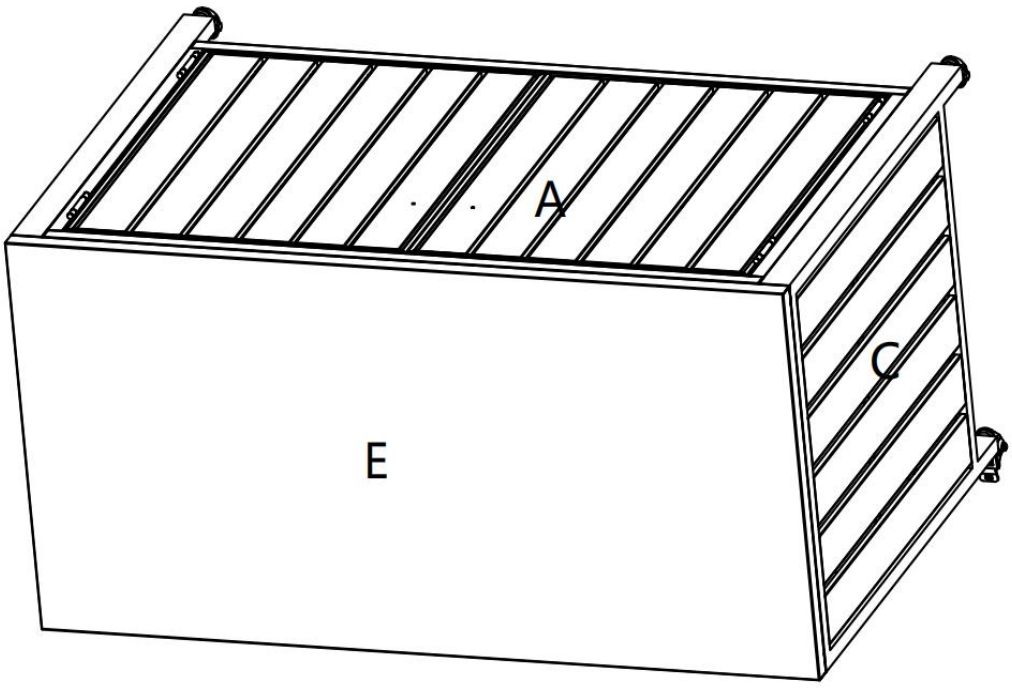

Carefully turn the cart upside down (or reach underneath) to secure the Top Panel (E) to the frame using the longer Installation Screws (I-M6x35mm) and the Allen Wrench (J).

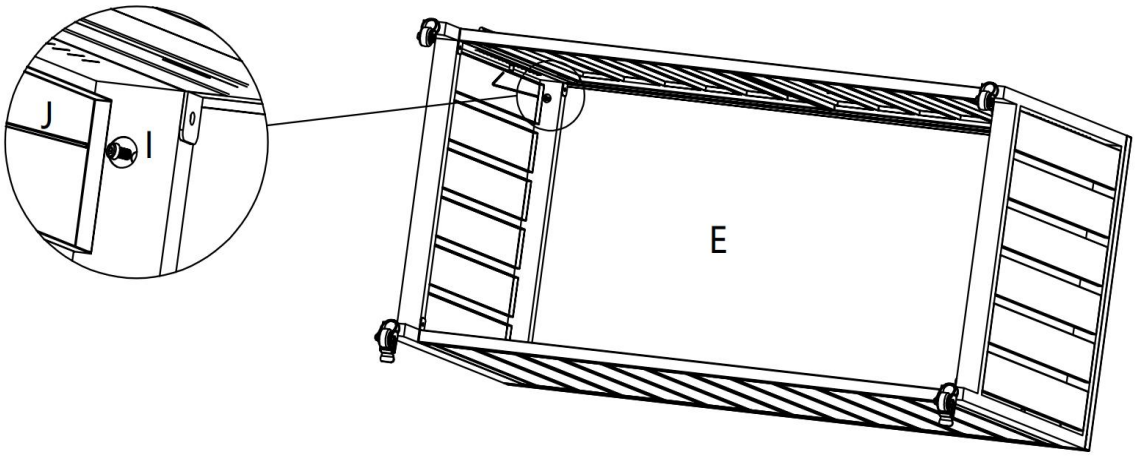

Turn the cart back upright. Attach the two Door Handles (F) to the Front Door Panel (A) using the Door Handle Installation Screws (H)

