ASSEMBLY INSTRUCTIONS

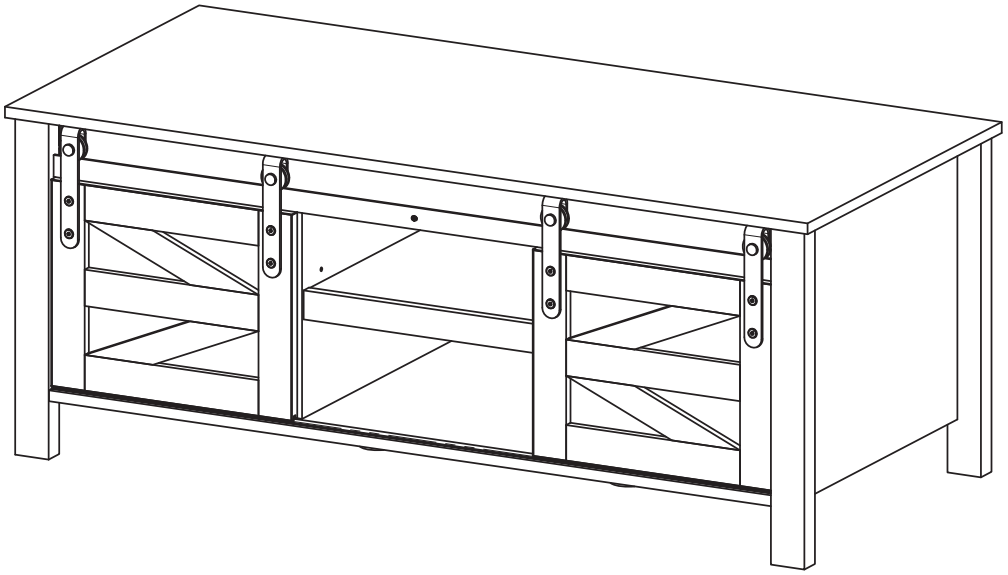

WARNING

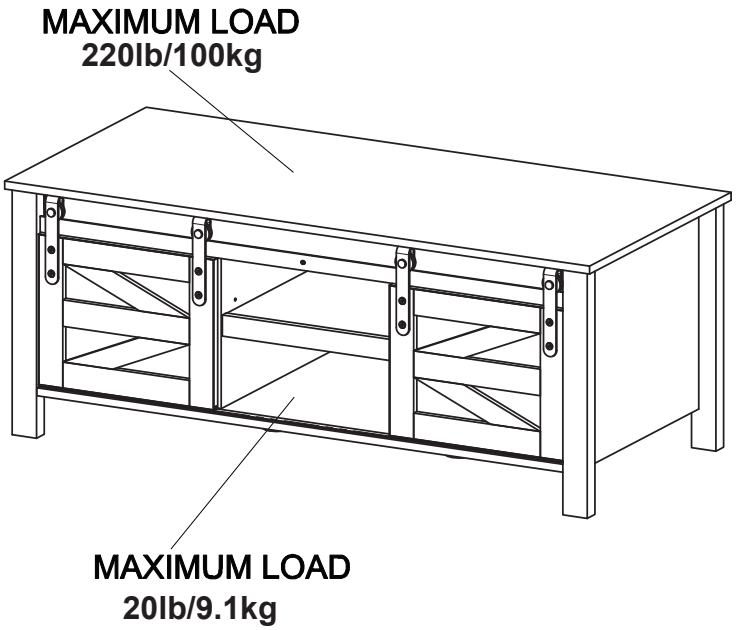

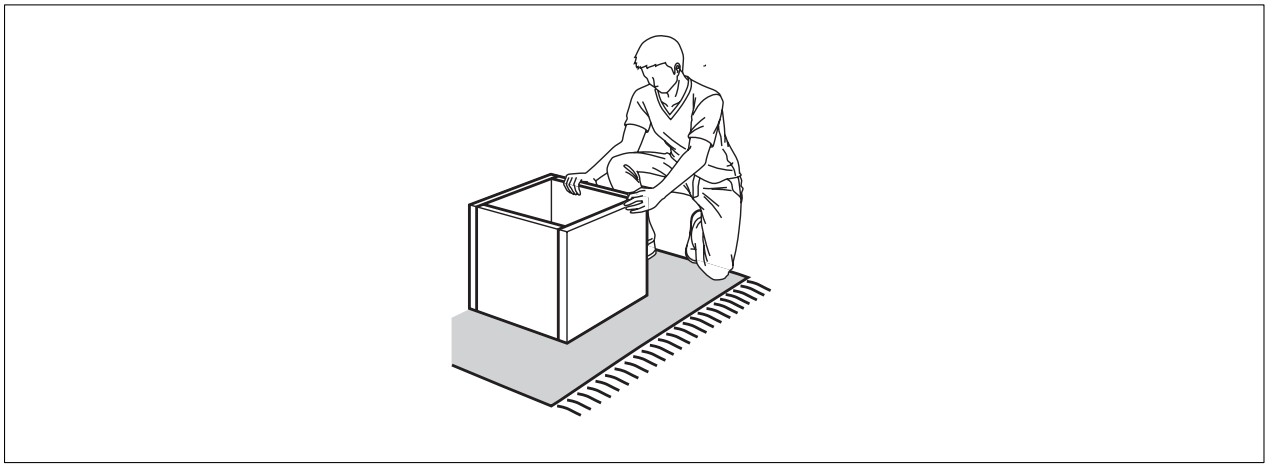

Assembling the furniture on empty carton, carpet, or rug to prevent scratches or damage.

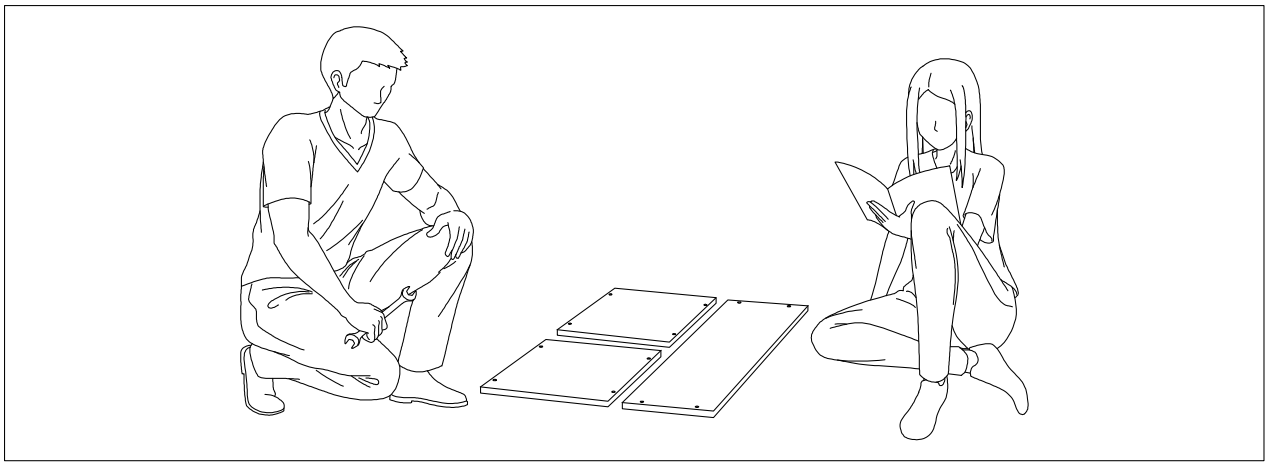

This furniture requires 2 people to assembly.

Make sure no parts missing or damaged before assembly.

CABINET PARTS

1 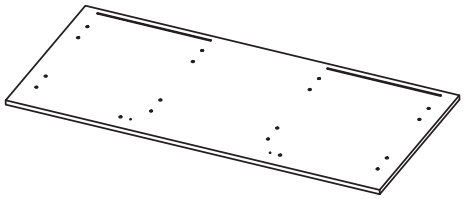 x 1	2 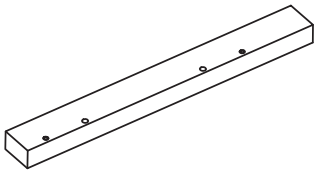 x 1	3 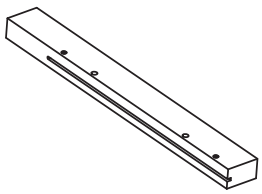 x 1
4 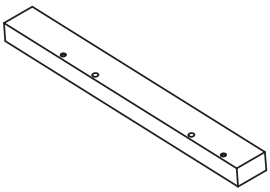 x 1	5 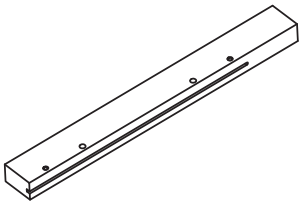 x 1	6 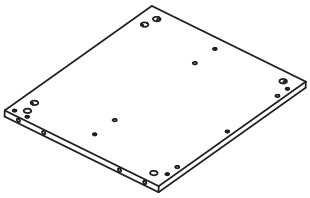 x 1
7 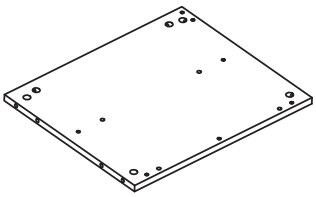 x 1	8 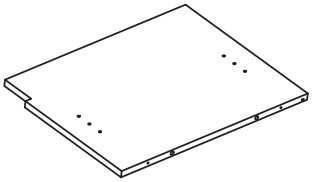 x 1	9 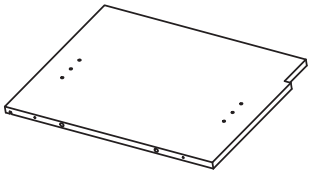 x 1
10 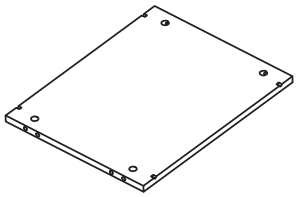 x 1	11 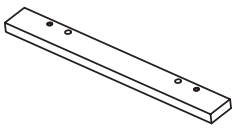 x 2	12 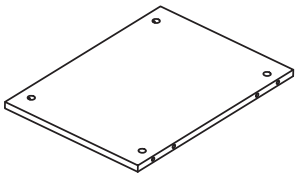 x 2
13 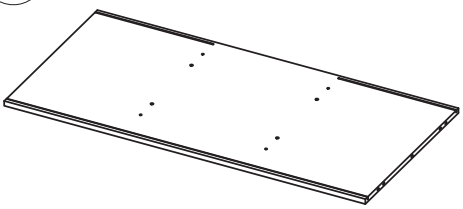 x 1	14 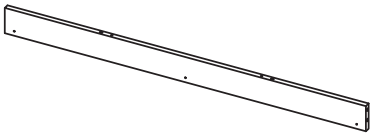 x 1	15 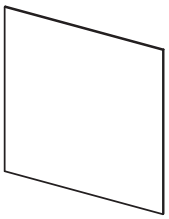 x 2
16 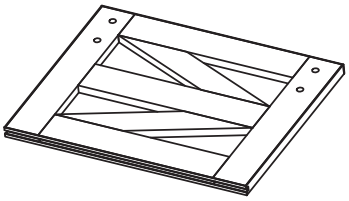 x 1	17 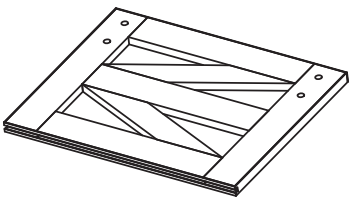 x 1	18 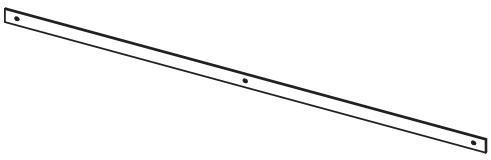 x 1

CABINET PARTS

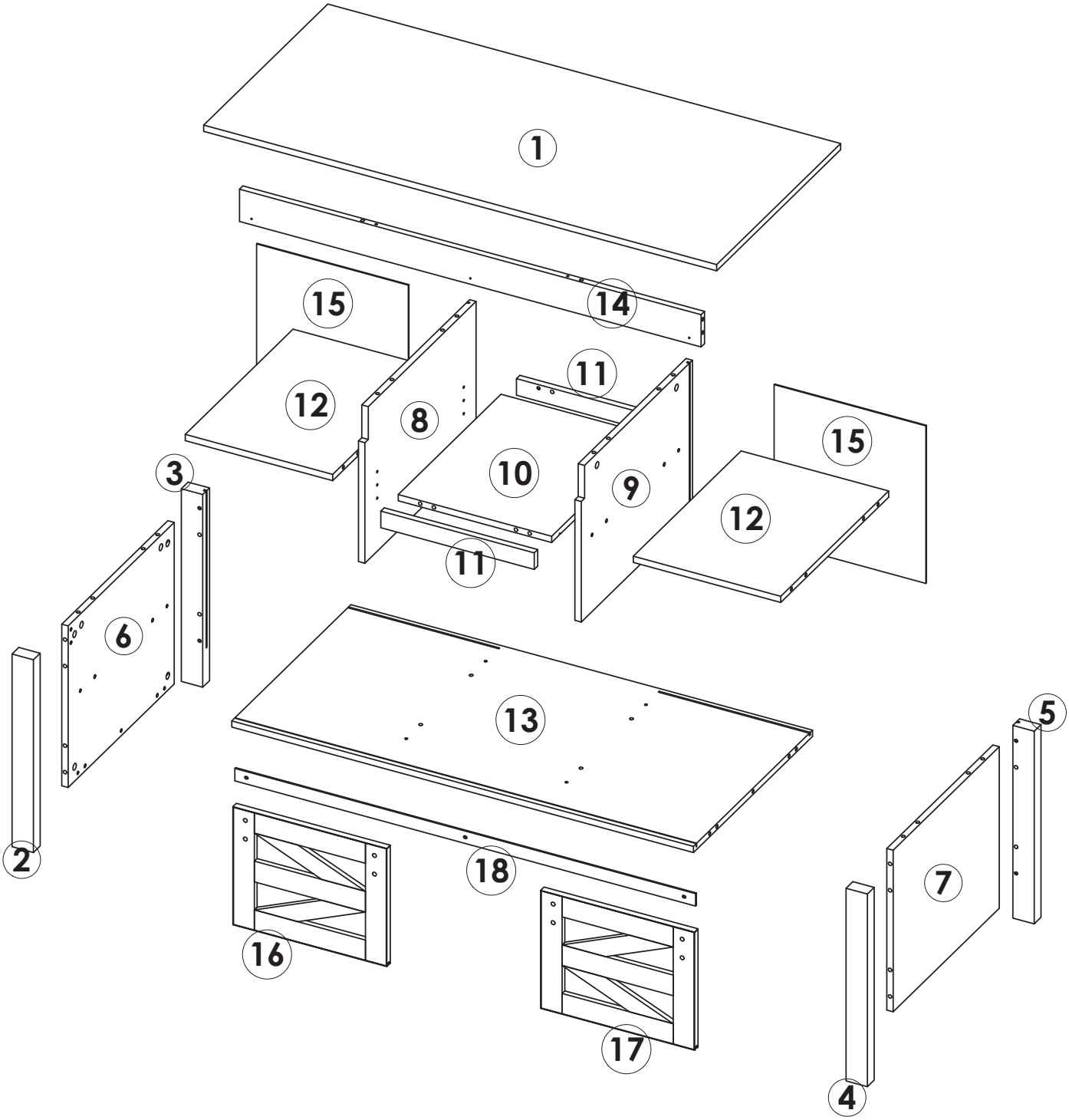

PARTS

A	x38+1	B	x38+1	C	x6+1	D	x 38+1
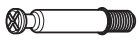						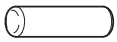	
M6x35		M15x10		M4x50		M8x30	

E	x 4	F	x 8	G	x 4	H	x 3+1
				 			
		M4x14		M3.5x14		M4x35	

I	x 3	J	x 8	K	x 1	L	x 2
				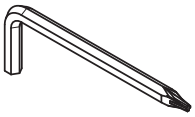		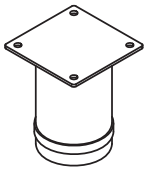	
M10x20		M6x15		M4			

21	x 4						
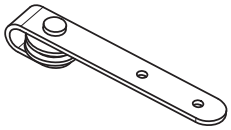							

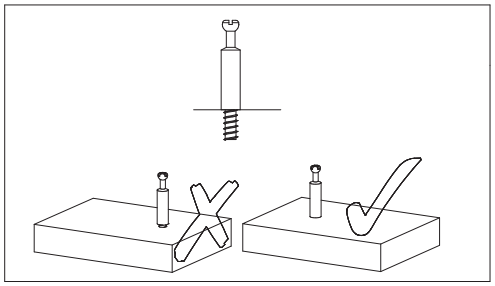

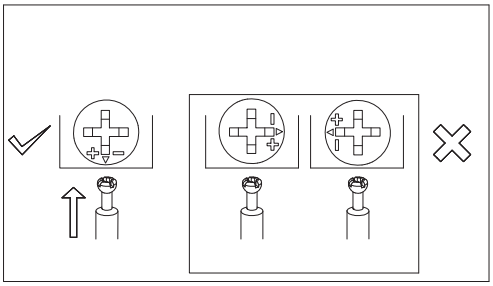

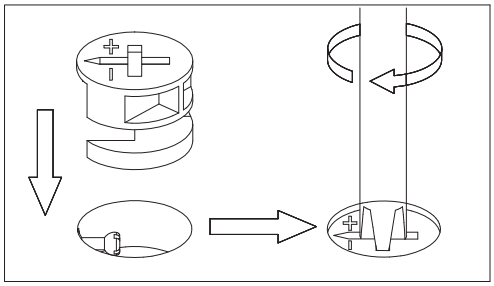

STEP 1

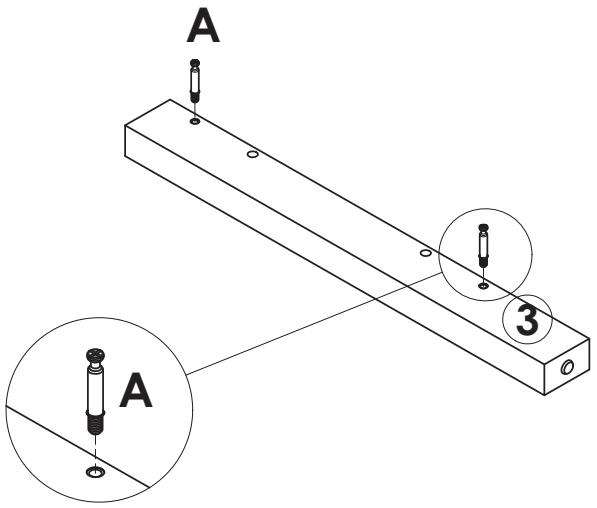

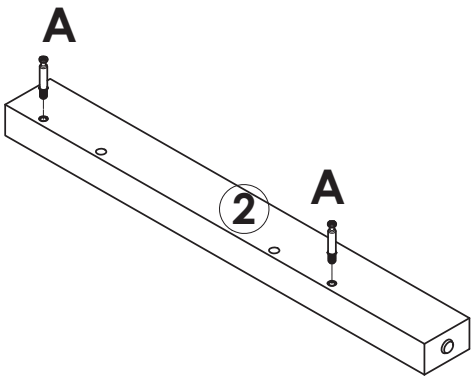

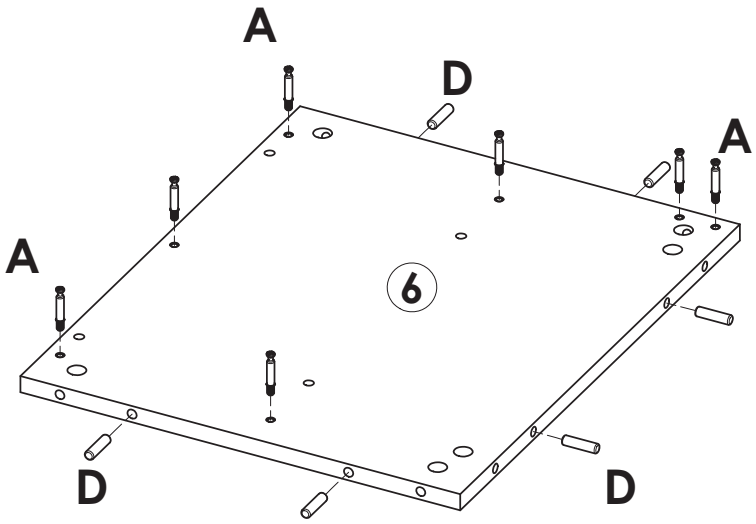

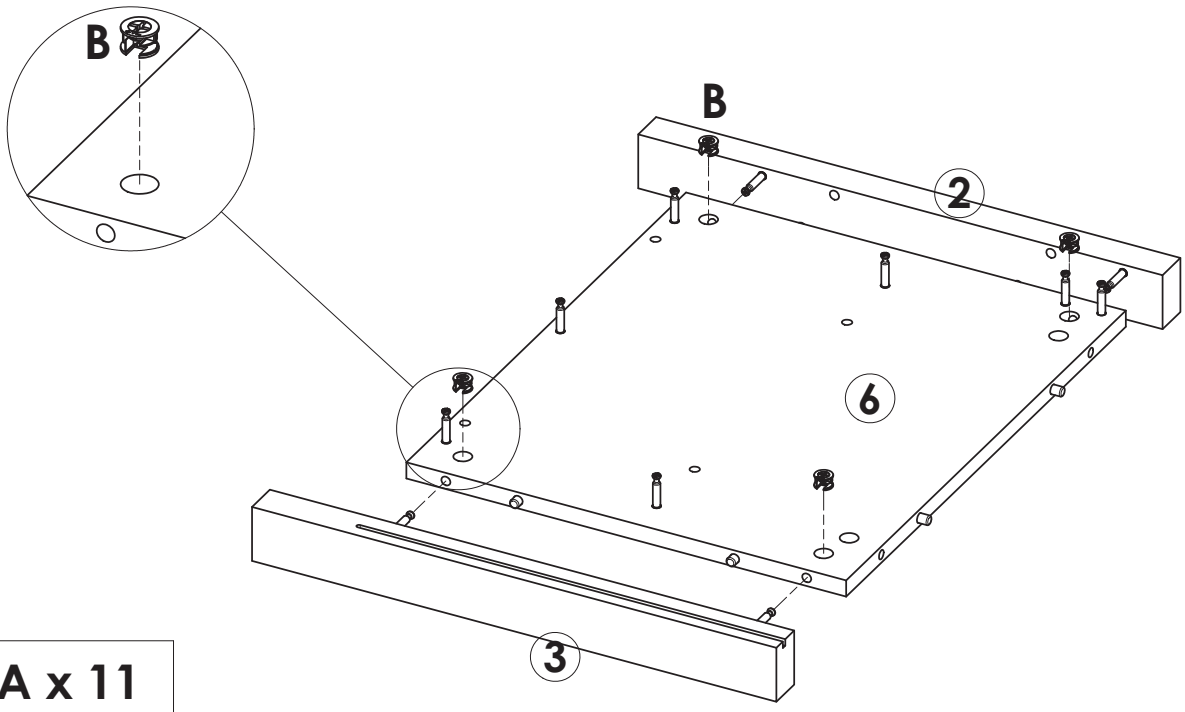

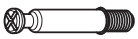	A x 11
	B x 4
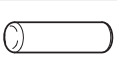	D x 6

STEP 2

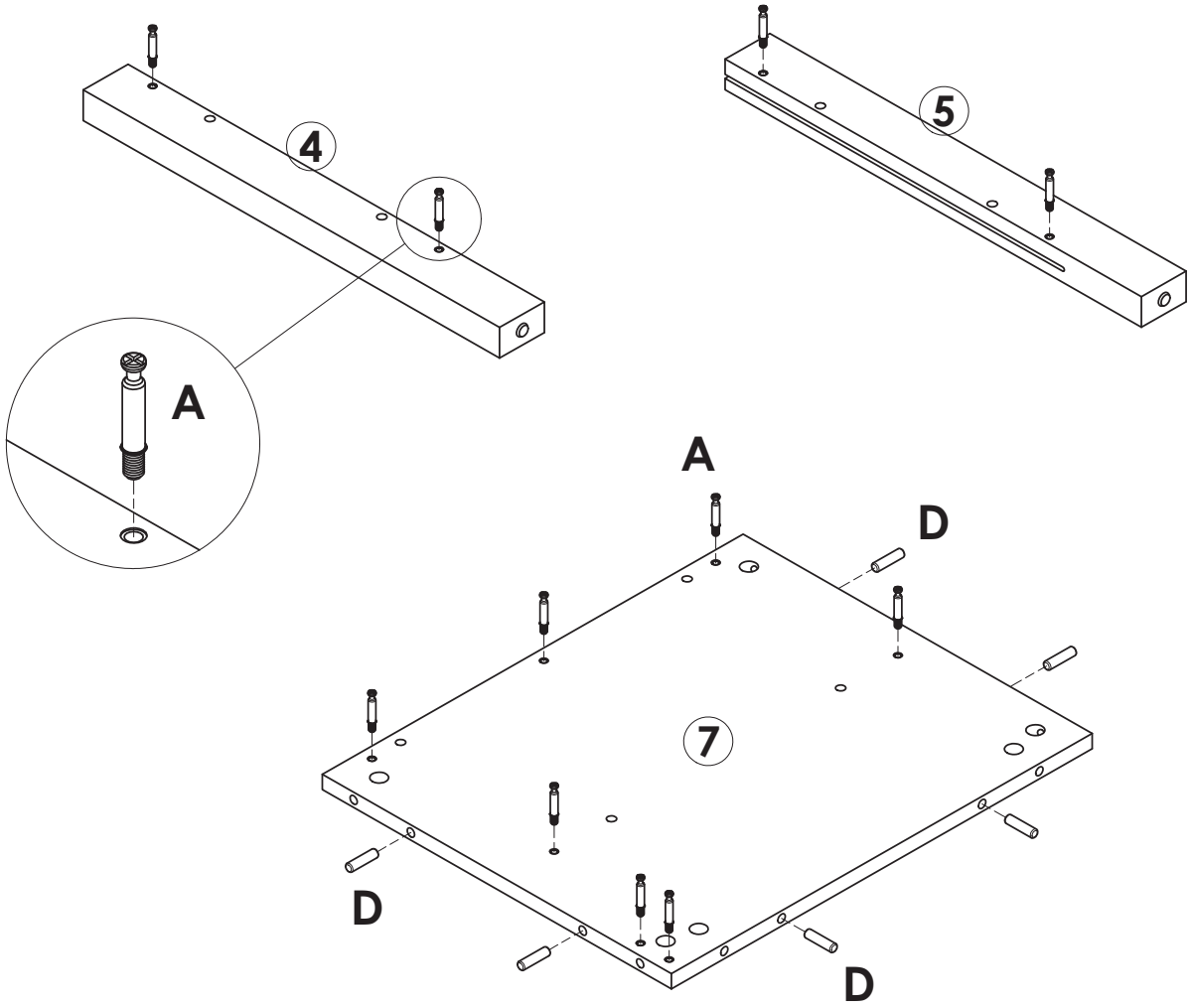

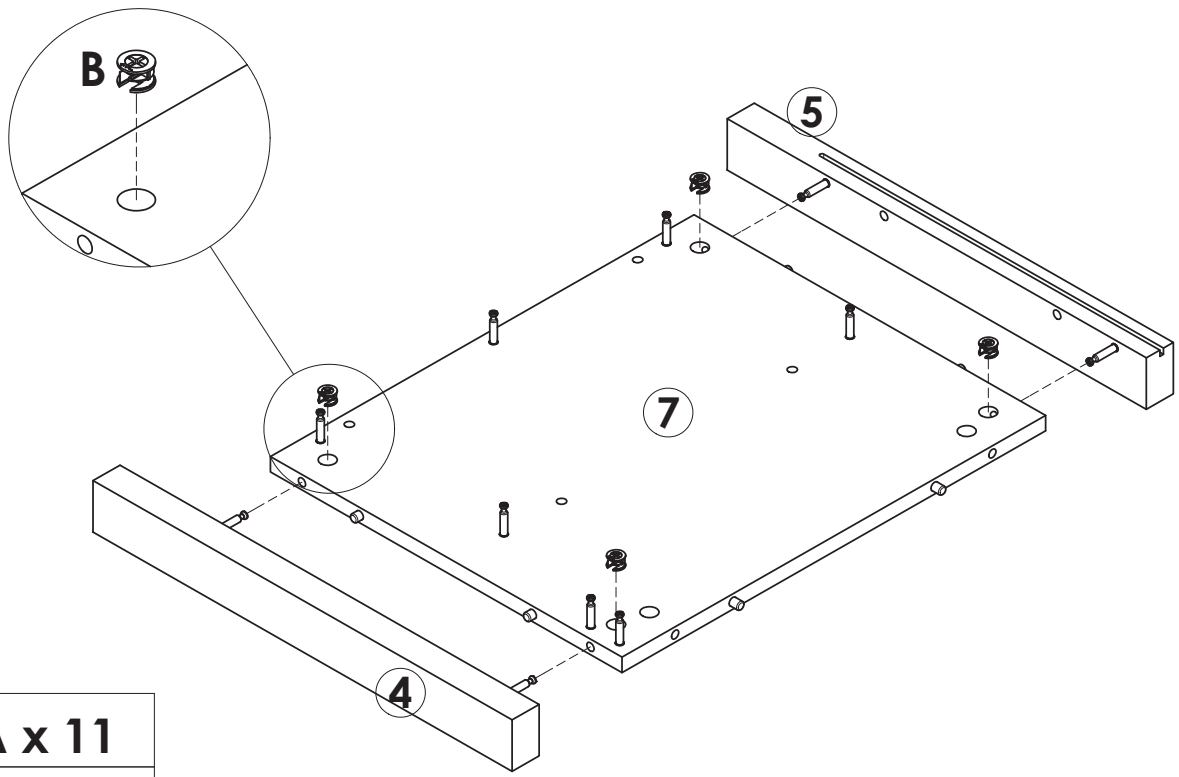

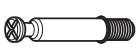	A x 11
	B x 4
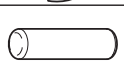	D x 6

STEP 3

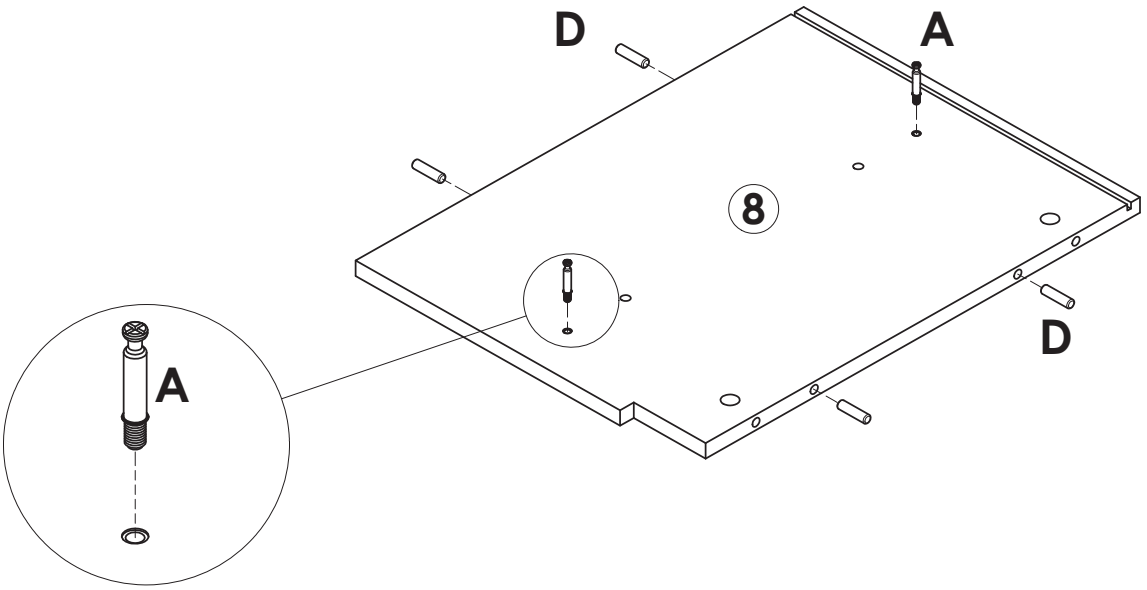

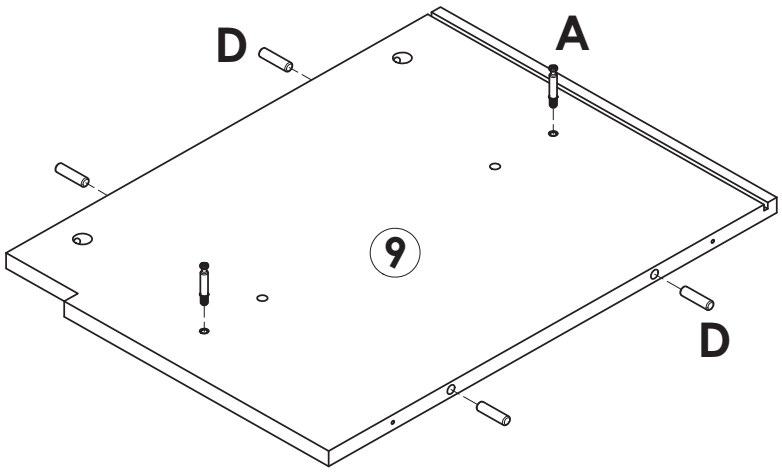

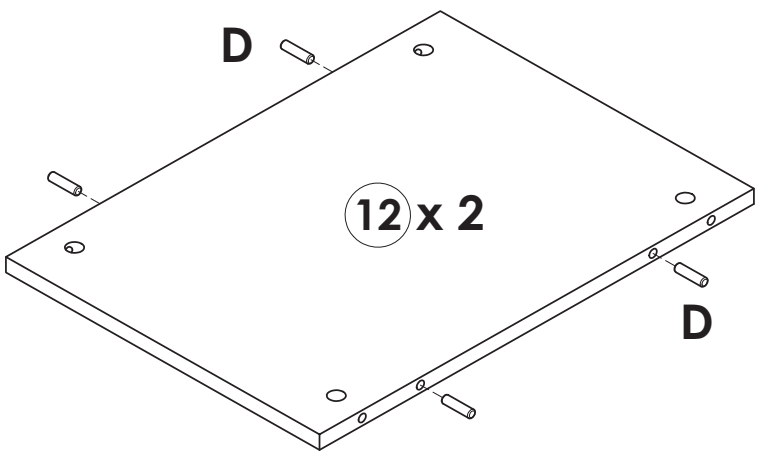

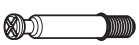	A x 4
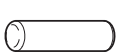	D x 16

STEP 4

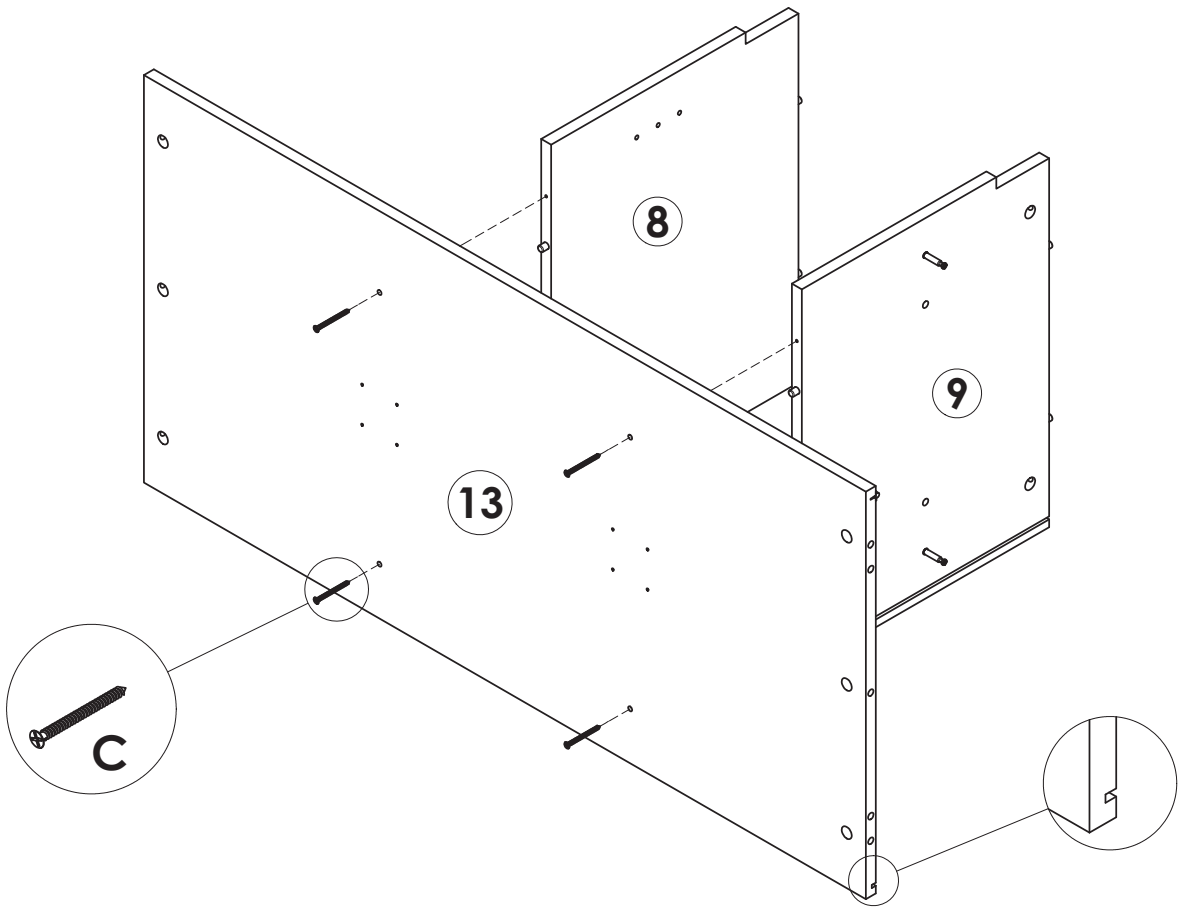

	C x 4

STEP 5

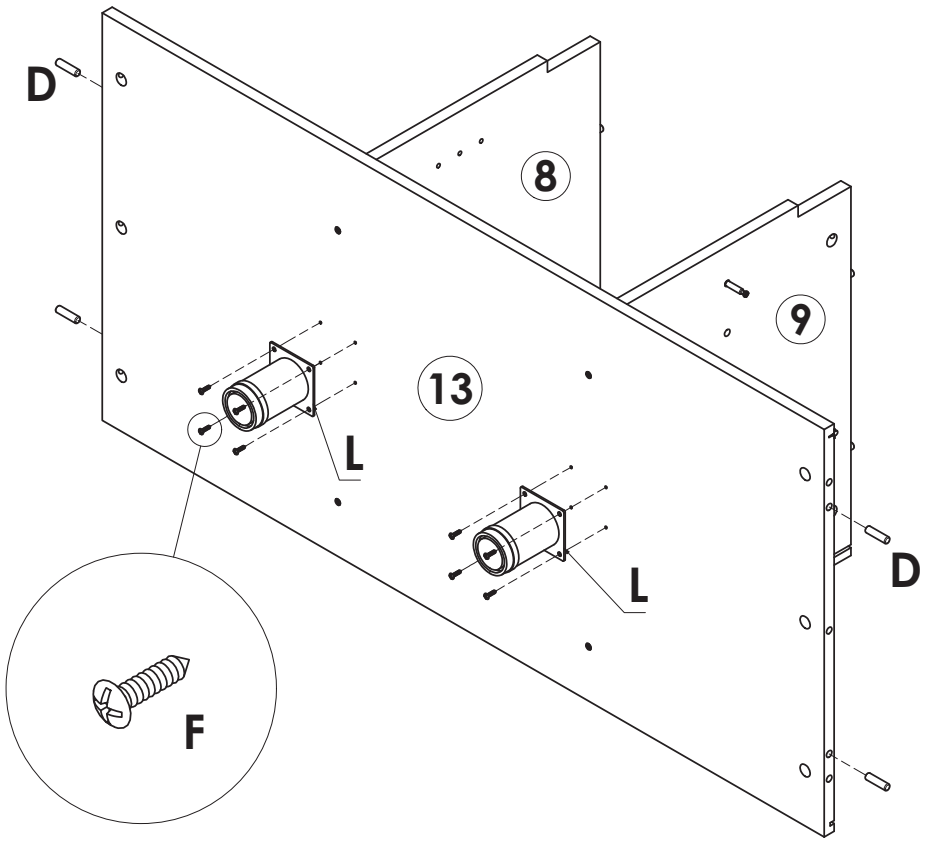

	D x 4
	F x 8
	L x 2

STEP 6

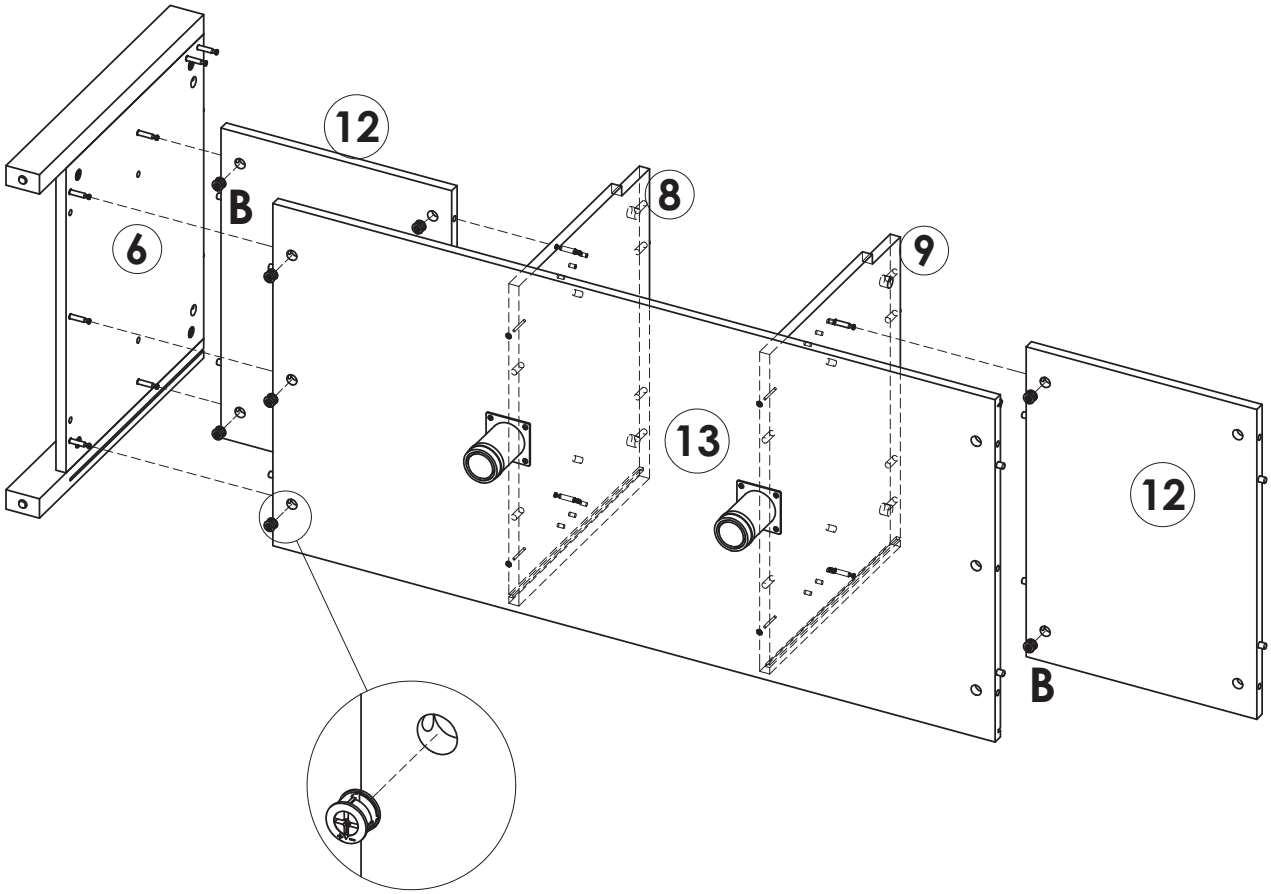

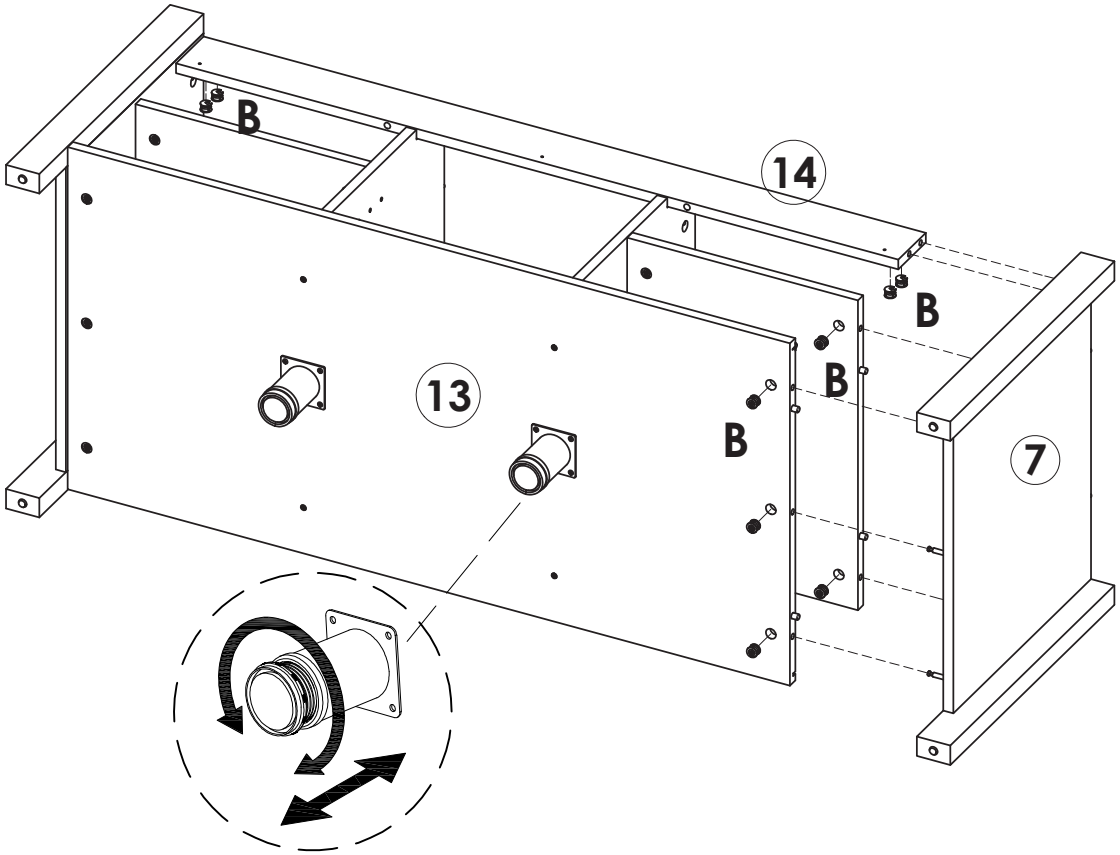

	B x 18

STEP 7

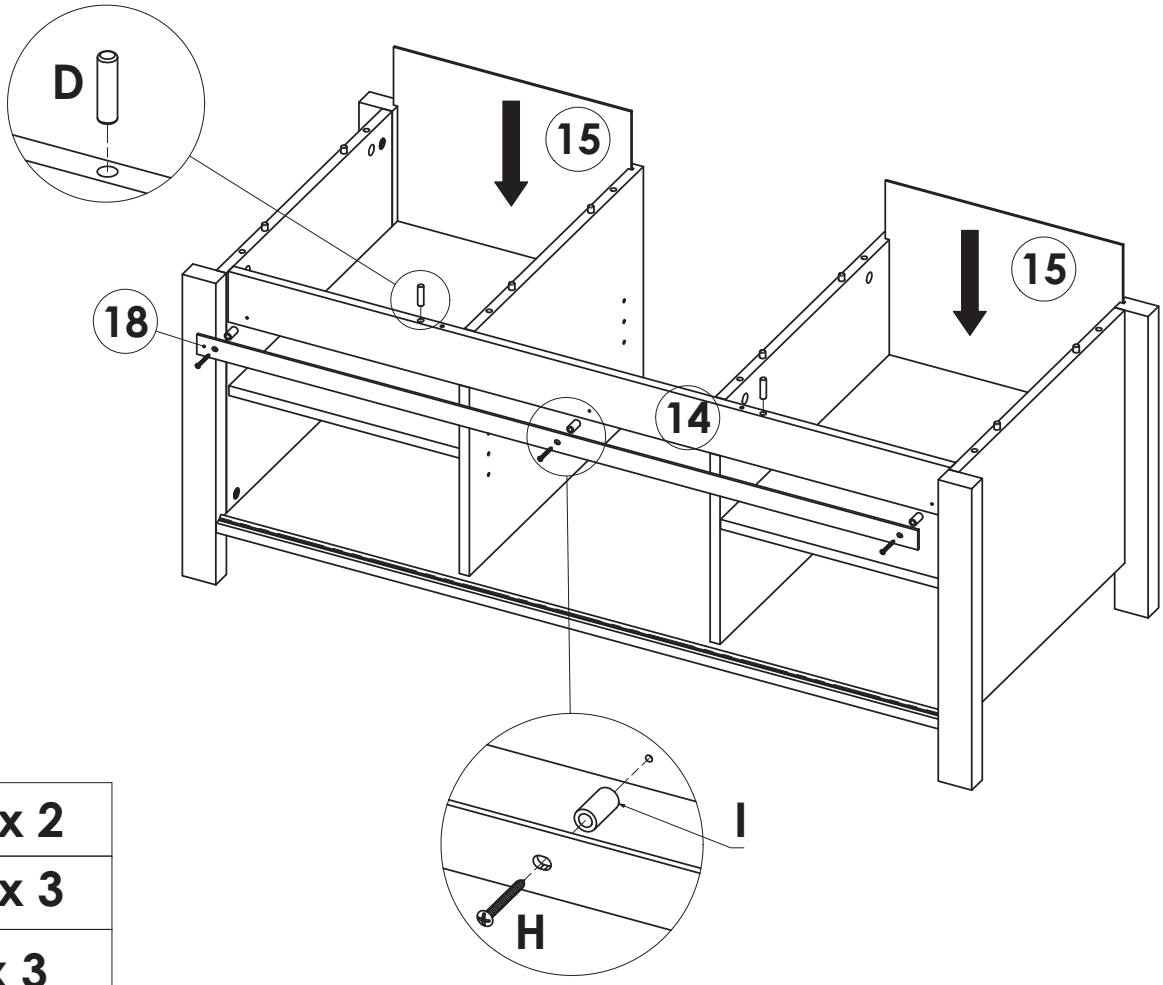

	D x 2
	H x 3
	I x 3

STEP 8

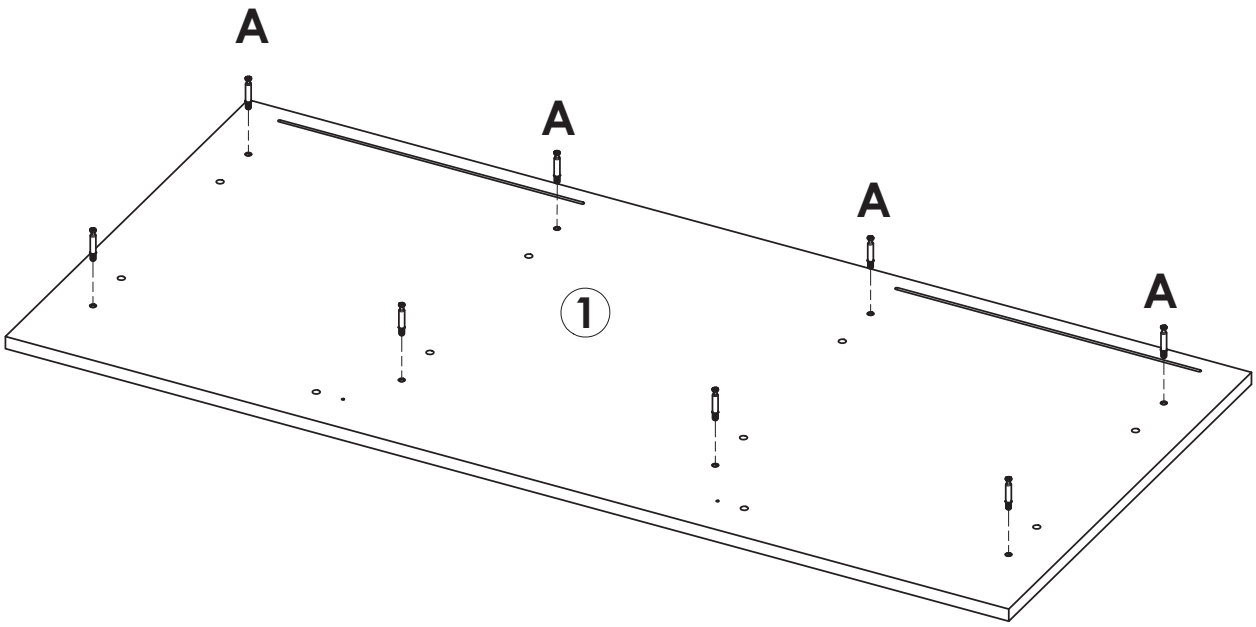

	A x 8

STEP 9

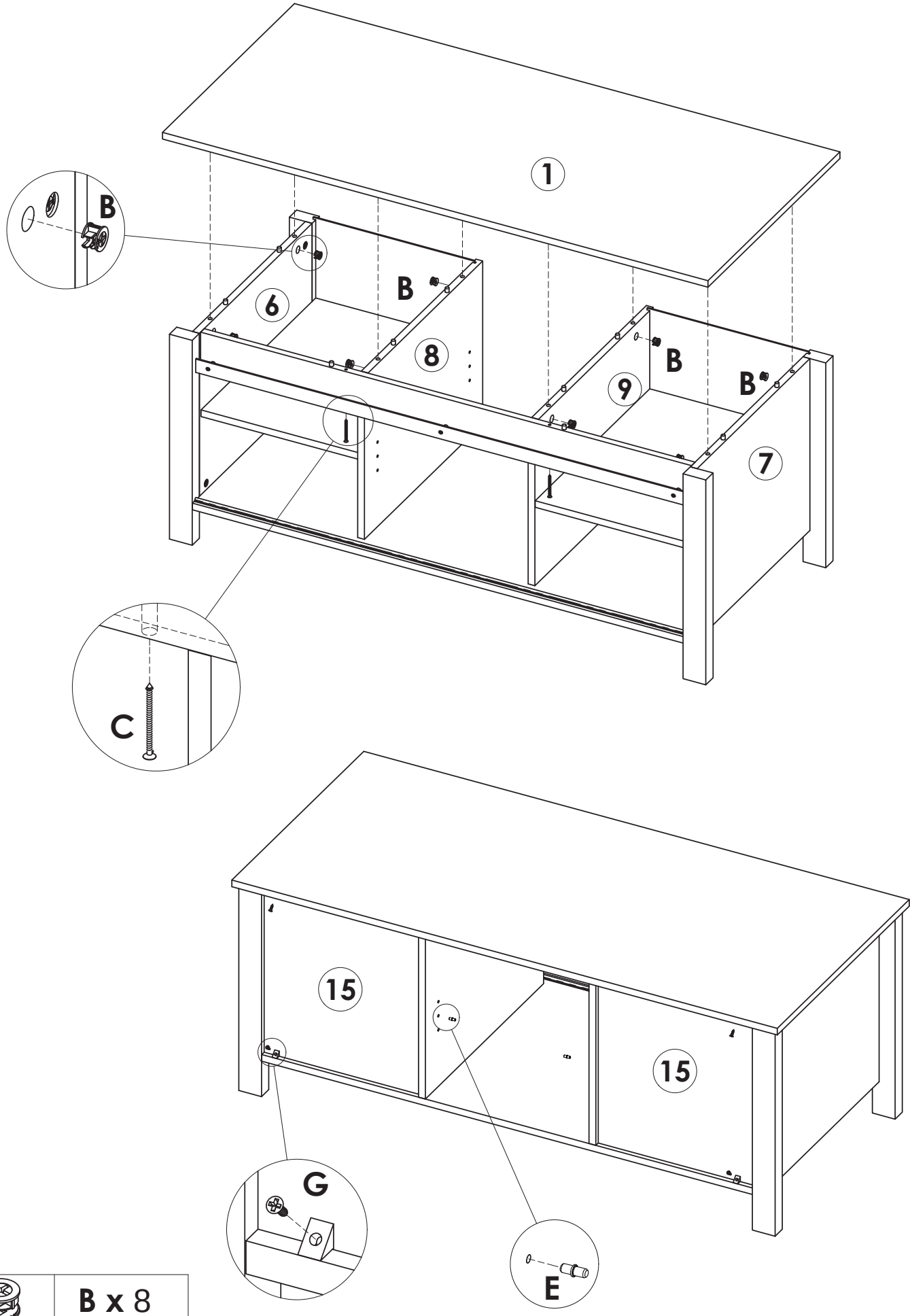

	B x 8		
	C x 2		
	E x 4		G x 4

STEP 10

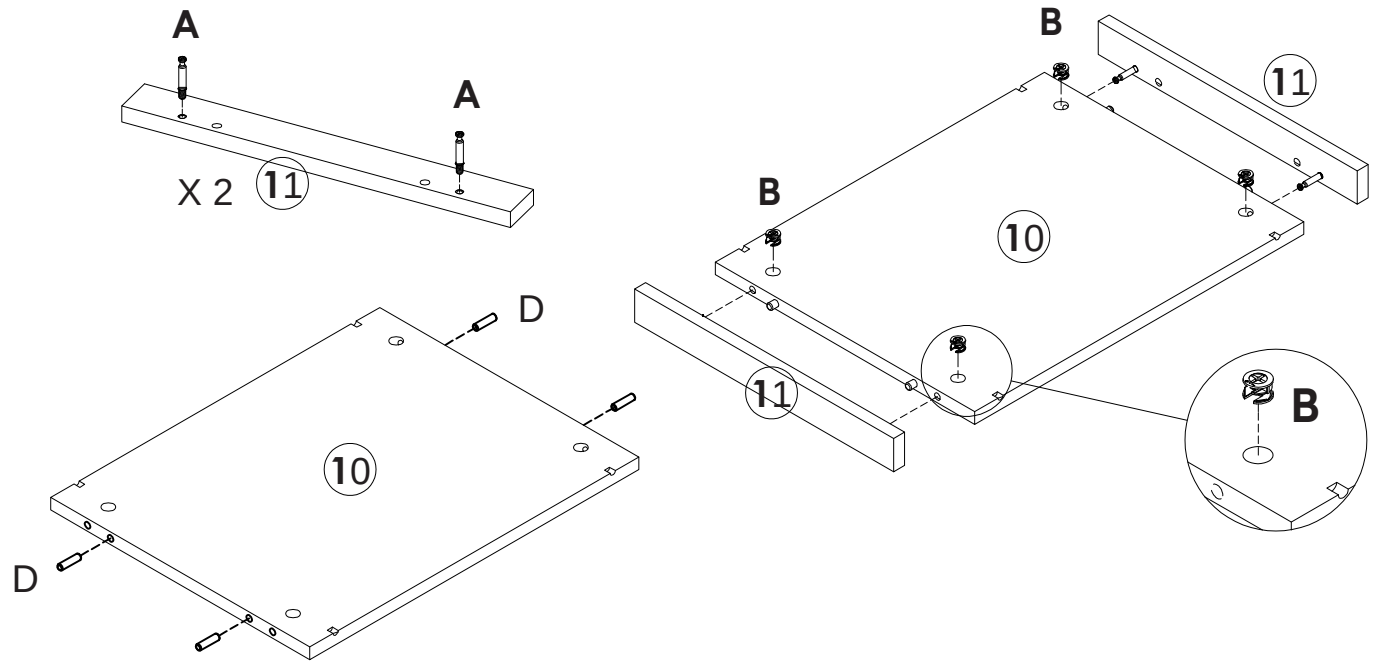

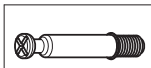	**A x** 4
	**B x** 4
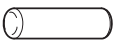	**D x** 4

STEP 11

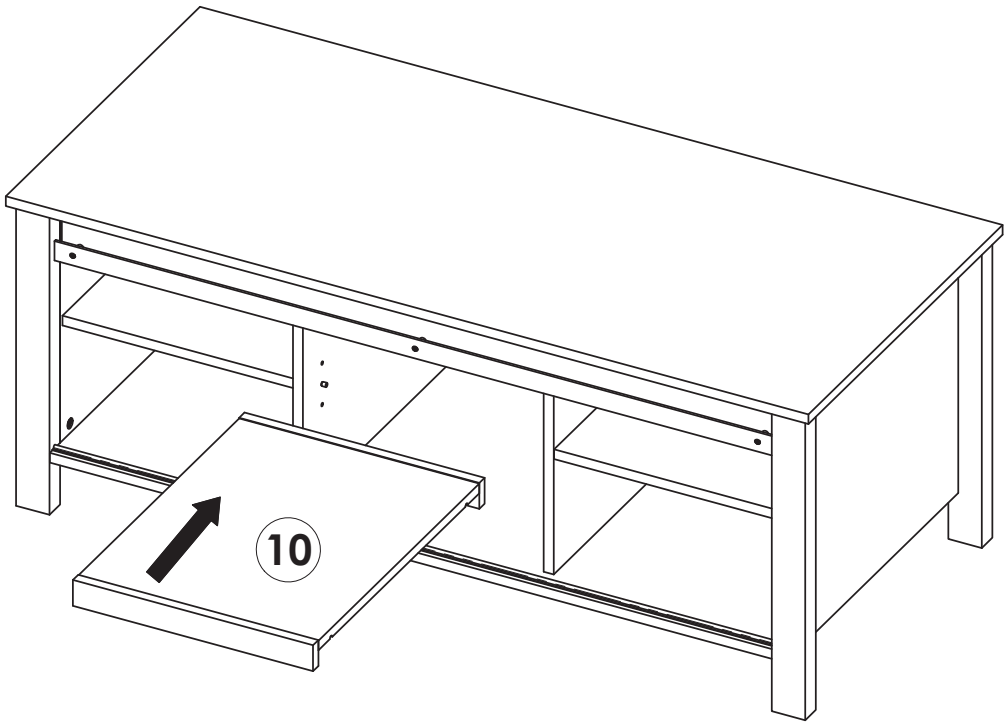

STEP 12

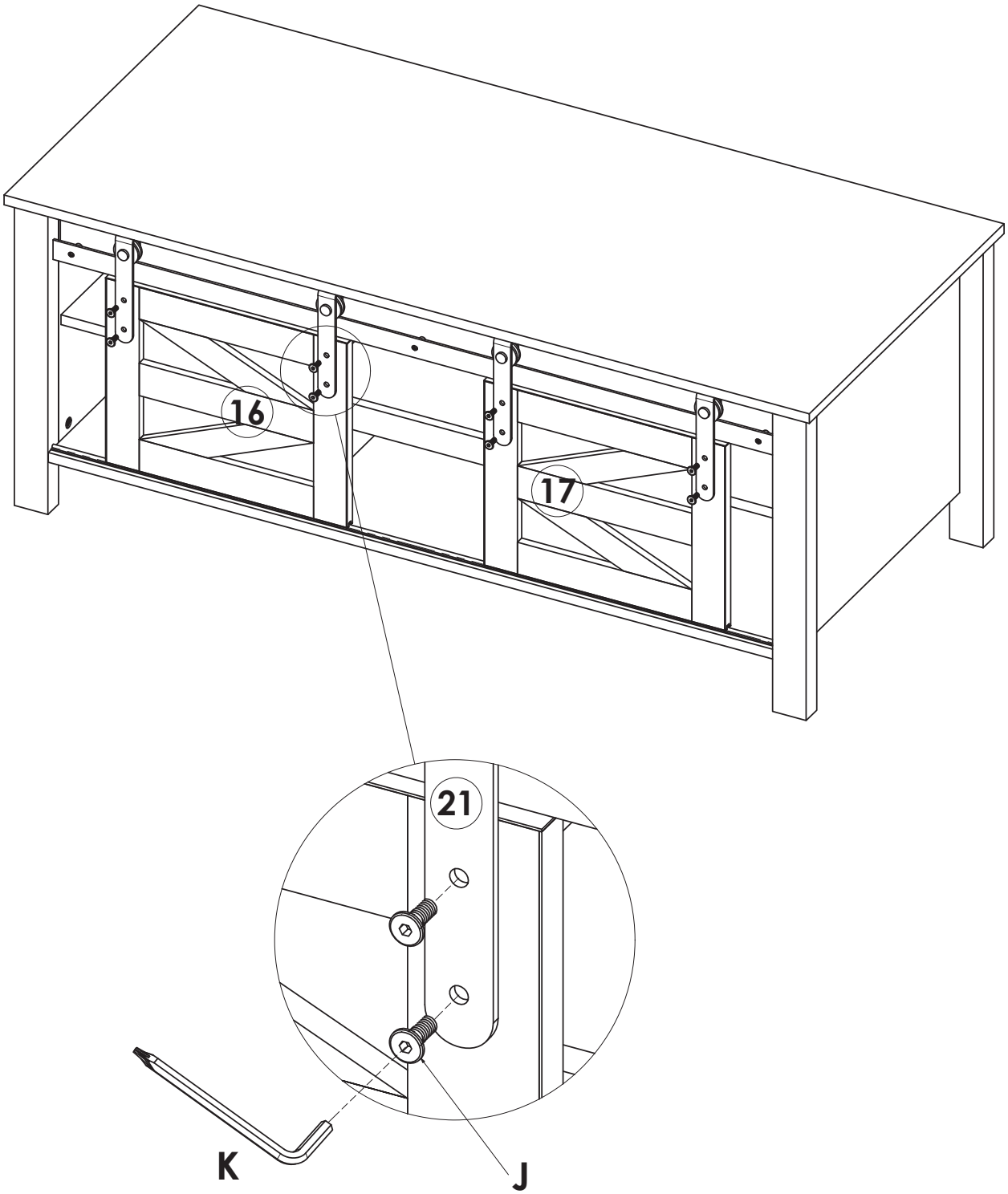

	J x 8
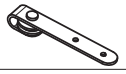	21 x 4

FURNITURE CARE AND MAINTENANCE

Particleboard

Thank you for your purchase. We want your item to last as long as possible. To ensure the product gives you years of service, please refer to this care and maintenance guide.

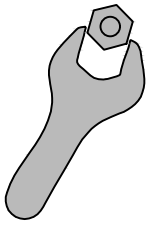

MAINTENANCE

. Tighten all bolts and screws again within the first 2 weeks of assembly
. Check the tightness of all bolts every 2 months, tighten them if necessary



CLEANING

. Clean the surface of the particleboard with a lightly dampened cloth
. Small amount of mild soap can be used if necessary
. Dry the surface immediately after cleaning.

. DO NOT use bleach or alcohol detergent to clean the surface.
. DO NOT apply wood treatment on parts made with particleboard.

Particleboard will swell and distort when suffer damage.
Make sure to dry the furniture immediately after cleaning