INSTALLATION INSTRUCTION

BEFORE YOU BEGIN

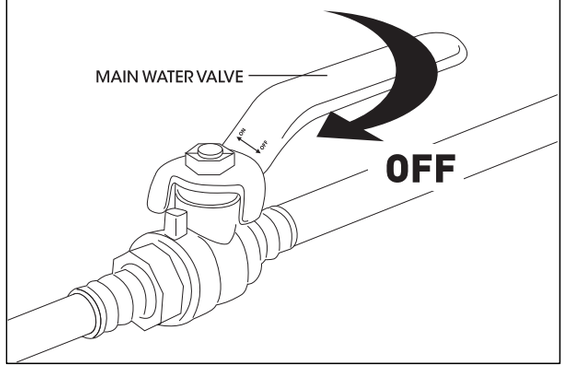

1. Prepare for installation by installing wood blocking between the two studs where the faucet will mount.

Important: Take into consideration the thickness of your finished wall materials, such as tile, when calculating measurements.

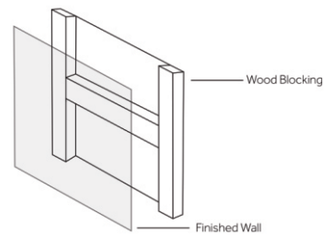

2. Mount the valve body in its prepared location. Attach the valve body to the wood blocking using pipe clamps. Use a level to ensure that the valve is mounted straight.

Important: Leave the protective plastic sleeves on the valve until your finished wall is completed.

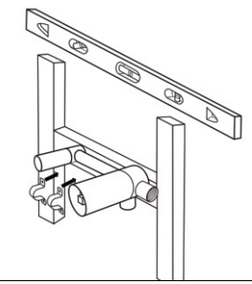

3. Attach your existing water lines to the valve body. Apply thread sealant or plumber's tape to the threaded connection to ensure a watertight seal.

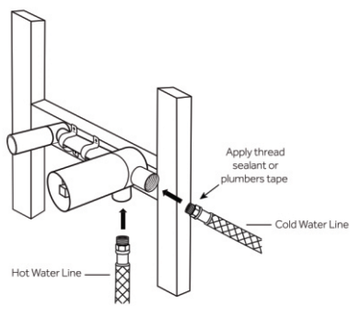

4. Once your finished wall has been completed, remove the protective plastic sleeves from the valve body.

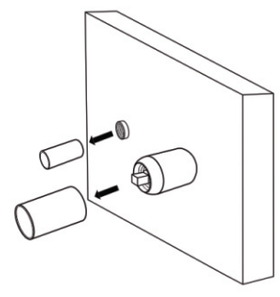

5. Slide the decorative escutcheons onto the installed valve body, as shown.

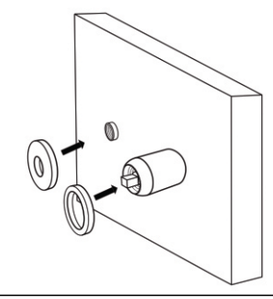

6. Attach the spout to the valve by threading it into its outlet, as shown. Apply plumber's tape or a small amount of thread sealant to the threads before attaching.

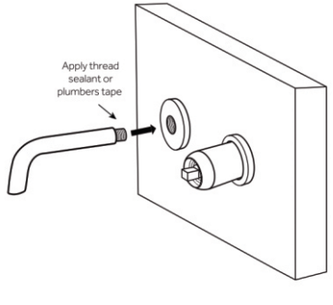

7. Attach the lever handle by sliding it onto the valve stem. Remove the screw cover located on the bottom of the handle, and tighten the set screw to secure. Reinsert the screw cover.

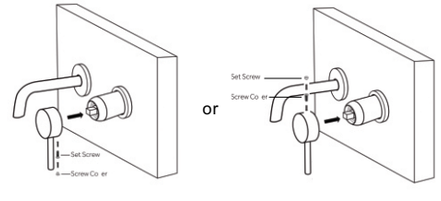

8. Once installation is complete, turn on the main water supply. Use the provided tool to remove the aerator from the spout. Turn the water on to allow any dust or loose sediment to clear the system. Allow the water to flow through the spout for approximately 60 seconds, and verify that hot and cold water are running properly. Reattach the aerator once testing is complete.

WALL-MOUNT BATHROOM FAUCET

Installation instruction

MB/BN/BG/CH/ORB

CARE INSTRUCTIONS

Rinse the product with clear water. Dry the product with a soft cloth.

DO NOT:

Use abrasive cleansers, cloths, or paper towels. Use any cleaning agents containing acid, polish, wax, alcohol, ammonia, bleach, solvent or any other corrosive or harsh cheminalc cleansers.

RECOMMENDED TOOLS

Plumber's putty

Thread seal tape

Included