# EASY TO INSTALL

**1**

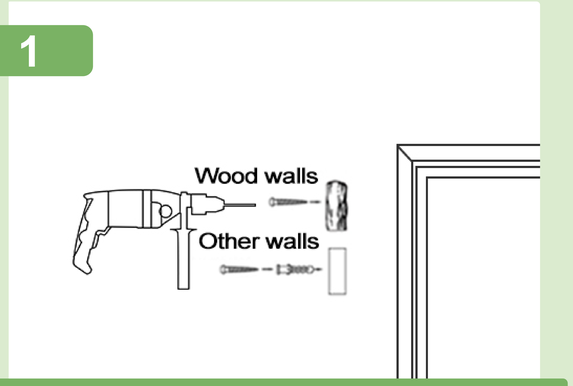


Screw mounting or drilled anchor mounting

**2**

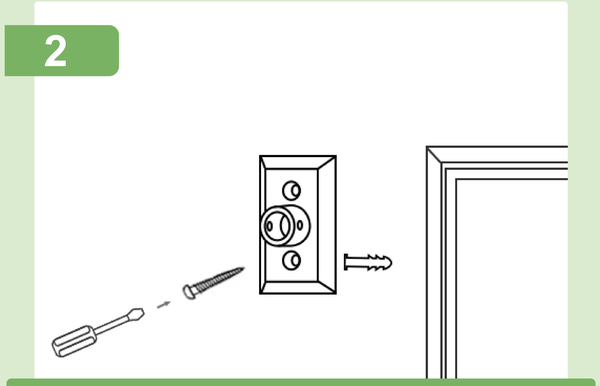

Secure the finial to the wall with anchors and screws

**3**

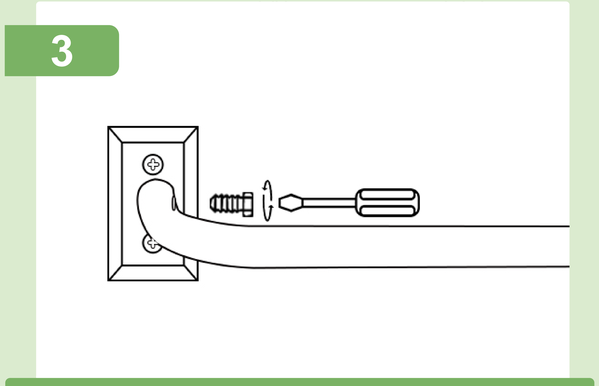

Unscrew the screws of the finial first, then use a screwdriver to fix the 7/8" inner rod to the finial

**4**

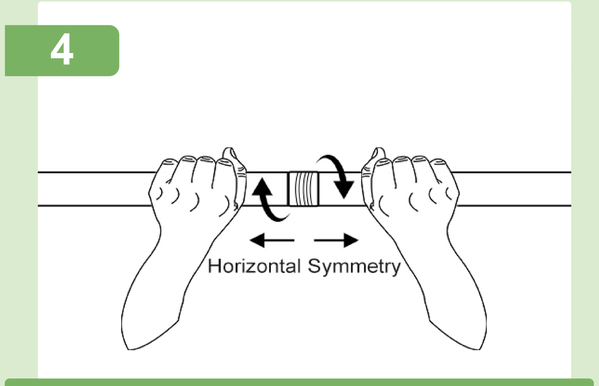


Splice the outer rods horizontally one after the other

**5**

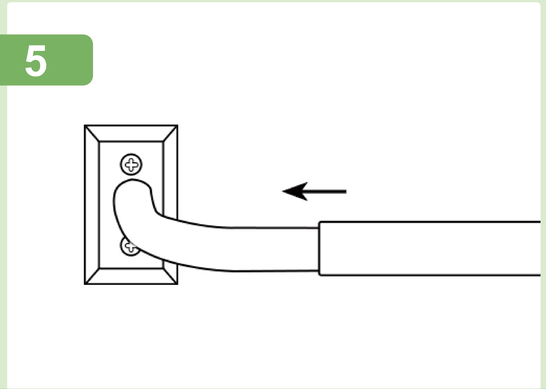

Insert the 1” outer rod into the 7/8” inner rod

**6**

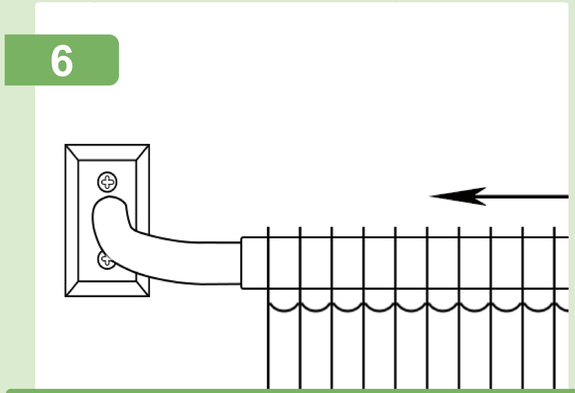

Attach curtain to curtain rod and adjust left and right

**7**

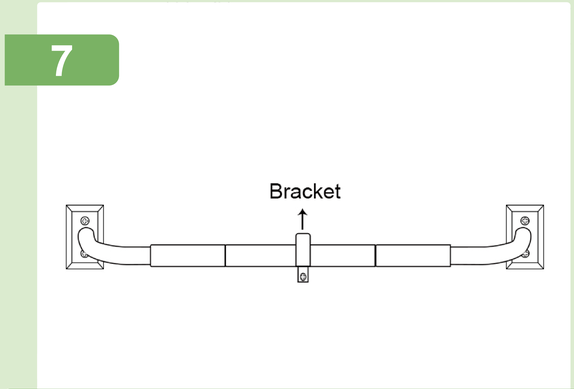


Put the bracket to the center of the curtain rod and secure the curtain rod with the screws on the bracket

**8**

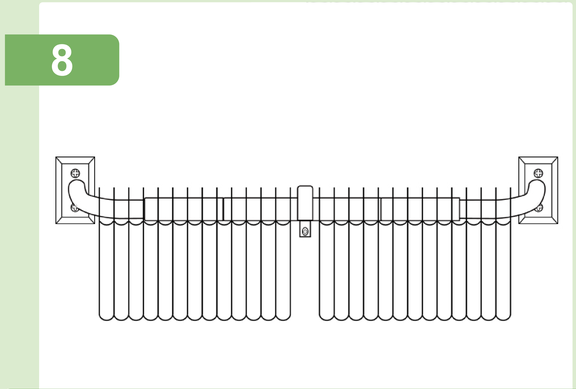

get a perfect curtain rod to decorate your home

- Our products are carefully designed and of high-quality.
- We carefully craft each product, paying attention to every detail.
- We offer worry-free and professional after-sales service.

Our brand has been producing and selling home decoration products for many years. We focus on researching and designing high-quality home decor, emphasizing product quality and customer experience. We produce and sell high-quality home decoration products in various styles to provide our customers with more choices and to create a warm and comfortable home environment for them.

We sincerely thank you for your purchase. We are always working hard to improve our performance in service, quality and procurement. If you are satisfied with our products, we will be sincerely happy. This is not only our greatest encouragement, but also our motivation to keep moving forward.

If you encounter any problems with your order, please tell us immediately. We would very much appreciate the opportunity to address and resolve your issue. Have a nice life.

# WRAP AROUND CURTAIN ROD

## PACKAGE LISTS

| Size | 28″-48″ | 28″-60″ | 36″-72″ | 48″-90″ | 66″-120″ | 72″-144″ | 28″-48″2pack | 48″-90″2pack |
|---|---|---|---|---|---|---|---|---|
| Inner Rod | (7/8″ -13.5″)*2 | (7/8″-13.5″)*2 | (7/8″-16″)*2 | (7/8″-16″)*2 | (7/8″-16″)*2 | (7/8″-16″)*2 | (7/8″-13.5″)*4 | (7/8″-16″)*4 |
| Outer Rod | (1″-13.5″)*2 | (1″-13.5″)*3 | (1″-16″)*3 | (1″-16″)*4 | (1″-16″)*6 | (1″-16″)*8 | (1″-13.5″)*4 | (1″-16″)*8 |
| Finial | 2 | 2 | 2 | 2 | 2 | 2 | 4 | 4 |
| Bracket | 1 | 1 | 1 | 1 | 1 | 1 | 2 | 2 |
| Anchor | 6 | 6 | 6 | 6 | 6 | 6 | 12 | 12 |
| Screw | 6 | 6 | 6 | 6 | 6 | 6 | 12 | 12 |
| Connector | 1 | 2 | 2 | 3 | 5 | 7 | 2 | 6 |

## COMPOSITION METHOD

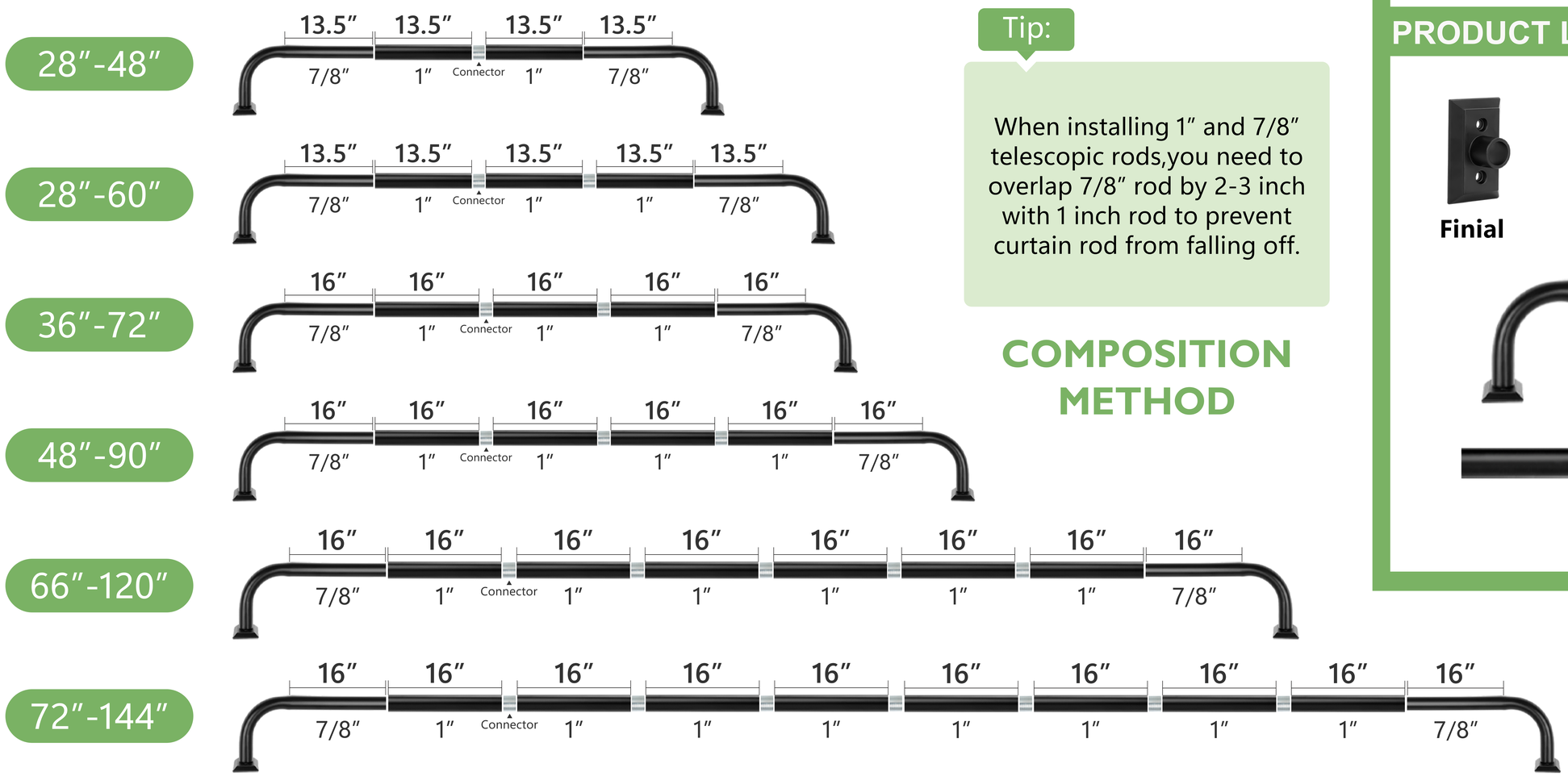


**Tip:**

When installing 1″ and 7/8″ telescopic rods,you need to overlap 7/8″ rod by 2-3 inch with 1 inch rod to prevent curtain rod from falling off.
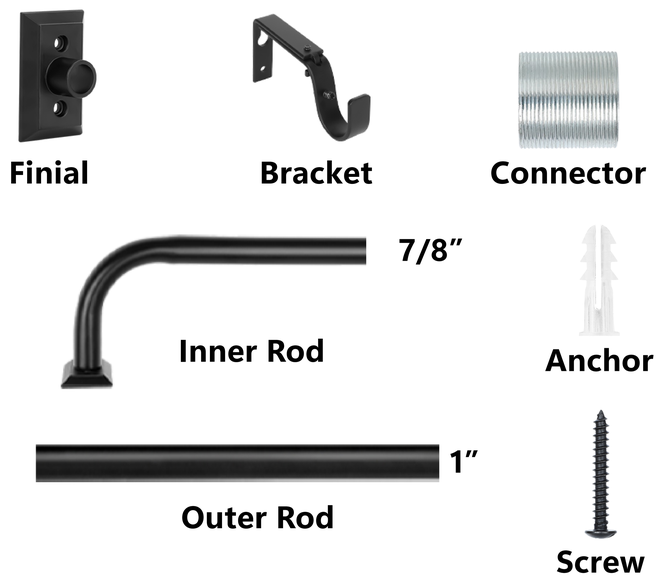
## PRODUCT LIST