User's Manual

Bed Frame

Note:

1.Should be assembled on flat ground to keep balance.

2.Before completing the installation, do not tighten the screws.

3.Please contact after-service directly for any breakage problem of the product,we will provide you with satisfactory service.

Scan to view step-by-step installation video.

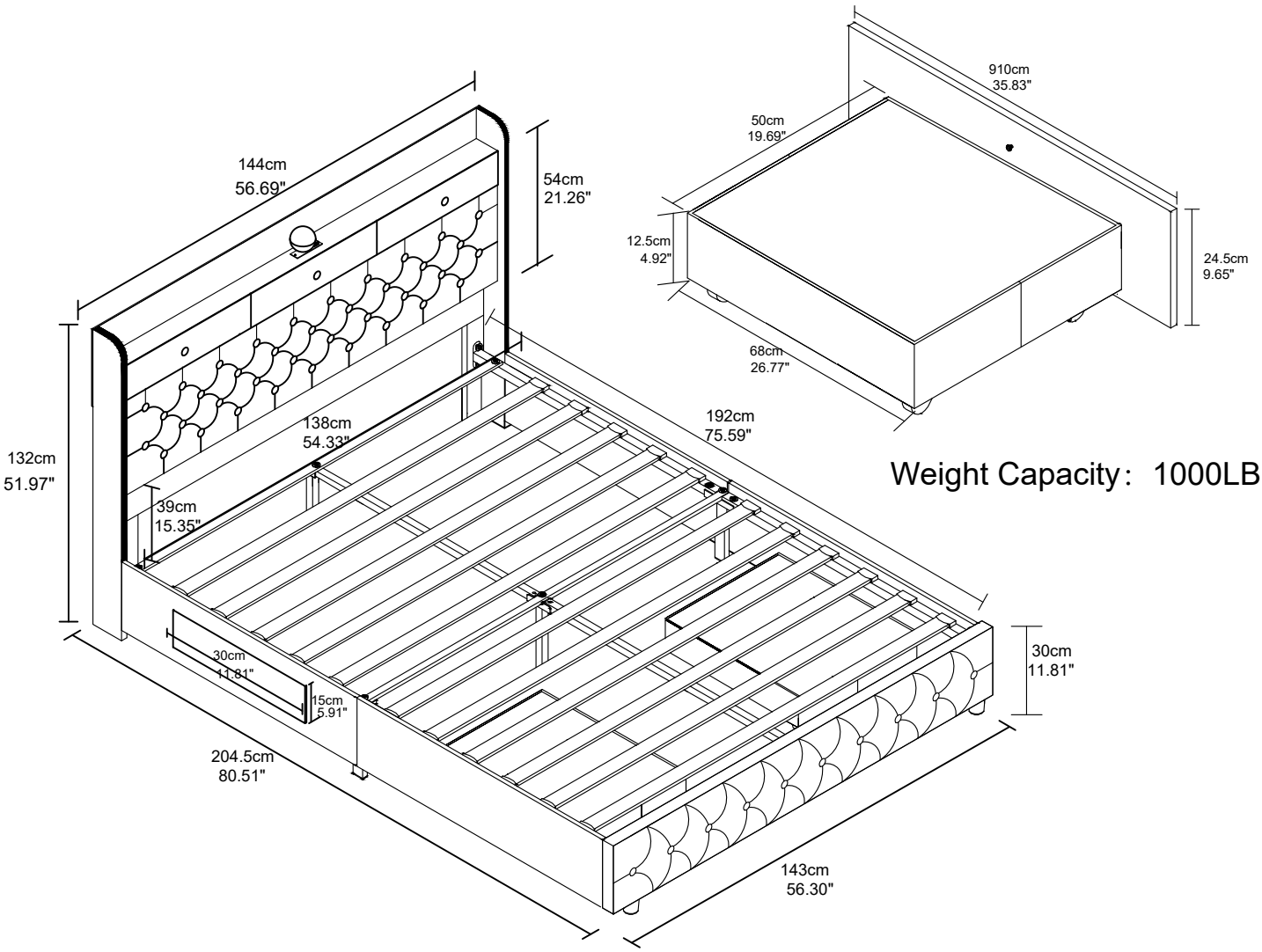

Weight Capacity: 1000LBS

Before starting the assembly,you must read the whole manual and follow the instructions

It needs at least two people to install.

803F-

W803FW / W803FB/W803FG V1.0

Thank You for Choosing Our Furniture!

Return & Support Instructions

DO NOT RETURN TO THE STORE! Contact us directly for quicker assistance.

- **Missing or Damaged Parts:** Occasionally, warehouse handling or shipping may not be as careful as we'd like.If any parts are missing or damaged, **we'll send replacements at no extra cost.**
- **Quality Concerns or Defects:** If the product doesn't meet your expectations or has any defects, you can reach out to us directly through the platform or via email at SibedsAfterService@outlook.com with your order details and a description of the issue. No matter how you contact us, **we'll respond within 24 hours to assist you.**

Before You Start Assembly

1. **Read the Instructions Thoroughly**: Make sure to review the entire manual from start to finish before beginning.
2. **Have Assistance Ready:** Depending on the product size, two or more adults may be needed for safe and efficient assembly.
3. **Keep Packaging:** Retain all packaging materials until the assembly is complete and you've confirmed that all parts are intact.
   Note: Please ensure your hands are clean when opening the internal packaging. If you encounter any stains that can't be cleaned, don't worry—contact us for assistance.
4. **Assembly Tools**: Our package includes convenient assembly tools, so there's no need to purchase anything extra. However, if you have your own preferred tools at home, feel free to use them.

Safety Precautions During Assembly

- **Stable Surface:** Ensure that the product is placed on a flat, stable surface during assembly to avoid accidents or damage to the product.
- **Keep Sharp Objects and Small Parts Away from Children:** Please keep sharp tools and small components out of reach of children to prevent any accidents.

Assembly Guidelines

If you experience any difficulties during assembly that prevent you from continuing:

- **Safely Store All Parts:** Ensure all components are stored in a secure place to avoid loss.
- **Contact Us for Help:** Reach out to us immediately, and we'll provide the support you need to resolve the issue.

Important: Some key parts may be stored in hidden compartments within the product, such as **inside the headboard**. Please inspect these areas carefully to ensure no parts are overlooked.

Screw Installation Instructions

To ensure proper alignment and stability:

1. **Start by Hand-Tightening:** Insert each screw halfway into its designated hole by hand. Avoid fully tightening them at this stage.
2. **Check Alignment:** Once all screws are partially inserted, confirm that the structure is aligned and level.
3. **Secure Screws:** After ensuring proper alignment, fully tighten each screw to securely fasten the product.

We are committed to ensuring your assembly process is as smooth as possible. If you have any questions or need further assistance, please don't hesitate to contact us!

Instrucciones para devoluciones y soporte

¡ NO DEVUELVA EL PRODUCTO A LA TIENDA!

Contáctenos directamente para obtener asistencia más rápida.

- **Piezas faltantes o dañadas:** En ocasiones, el manejo en el almacén o el envío pueden no ser tan cuidadosos como nos gustaría. **Si faltan piezas o están dañadas, le enviaremos reemplazos sin costo adicional.**
- **Problemas de calidad o defectos:** Si el producto no cumple con sus expectativas o tiene algún defecto, puede comunicarse con nosotros directamente a través de la plataforma o por correo electrónico a **SibedsAfterService@outlook.com** con los detalles de su pedido y una descripción del problema. **Sin importar cómo nos contacte, responderemos dentro de las 24 horas para asistirle.**

Antes de comenzar el ensamblaje

1. **Lea detenidamente las instrucciones:** Asegúrese de revisar todo el manual de principio a fin antes de comenzar.
2. **Tenga ayuda disponible:** Dependiendo del tamaño del producto, se podrían necesitar dos o más adultos para un ensamblaje seguro y eficiente.
3. **Conserve el embalaje:** Guarde todos los materiales de embalaje hasta que el ensamblaje esté completo y haya confirmado que todas las piezas están intactas.

   Nota: Asegúrese de que sus manos estén limpias al abrir el embalaje interno. Si encuentra alguna mancha que no pueda limpiar, no se preocupe; contáctenos para obtener ayuda.
4. **Herramientas de ensamblaje:** Nuestro paquete incluye herramientas convenientes para el ensamblaje, por lo que no necesitará comprar nada extra. Sin embargo, si tiene sus propias herramientas preferidas en casa, puede utilizarlas.

Precauciones de seguridad durante el ensamblaje

- **Superficie estable:** Asegúrese de que el producto esté colocado sobre una superficie plana y estable durante el ensamblaje para evitar accidentes o daños al producto.
- **Mantenga los objetos afilados y las piezas pequeñas fuera del alcance de los niños:** Por favor, mantenga las herramientas afiladas y los componentes pequeños fuera del alcance de los niños para prevenir accidentes.

Guía para el ensamblaje

- **Almacene todas las piezas de manera segura:** Asegúrese de que todos los componentes estén guardados en un lugar seguro para evitar pérdidas.
- **Contáctenos para obtener ayuda:** Comuníquese con nosotros de inmediato y le brindaremos el soporte necesario para resolver el problema.

  Importante: Algunas piezas clave pueden estar guardadas en compartimentos ocultos dentro del producto, como dentro del cabecero. Inspeccione cuidadosamente estas áreas para asegurarse de no pasar por alto ningún componente.

Instrucciones para la instalación de tornillos

- **Comience ajustando a mano:** Inserte cada tornillo hasta la mitad en su orificio designado a mano. Evite apretarlos completamente en esta etapa.
- **Verifique la alineación:** Una vez que todos los tornillos estén parcialmente insertados, confirme que la estructura esté alineada y nivelada.
- **Ajuste los tornillos:** Después de asegurar la alineación adecuada, apriete completamente cada tornillo para fijar el producto de manera segura.

Assembly Instruction of (Bed)

Drawers shown separately

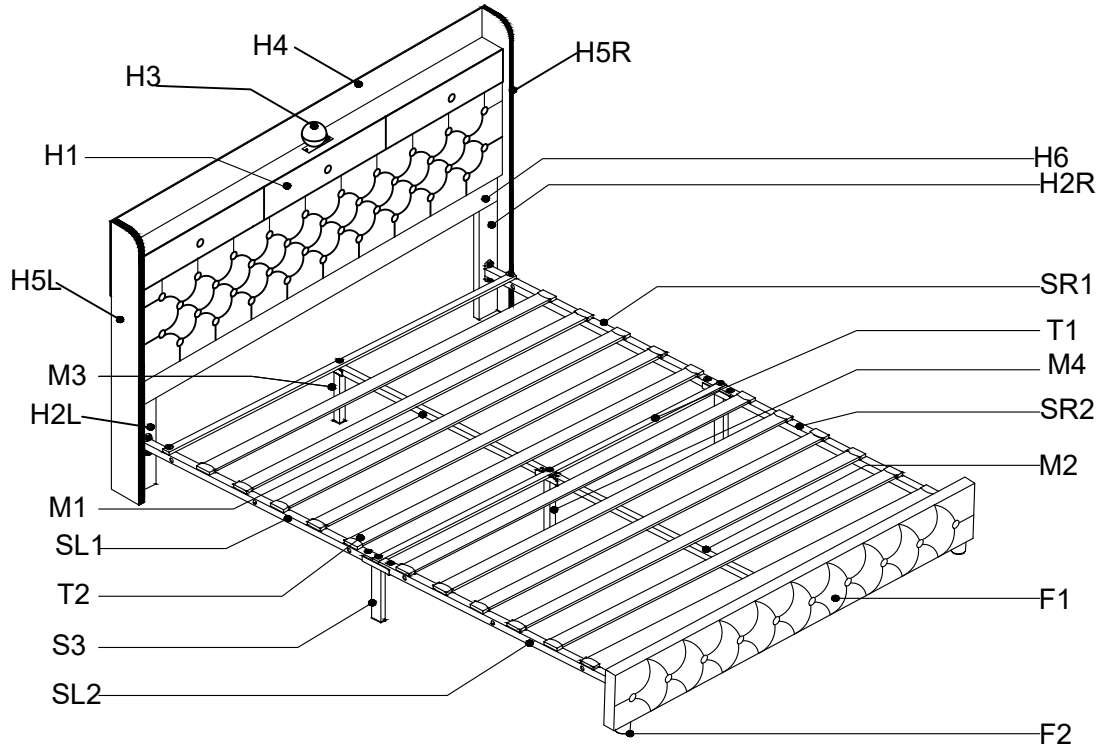

H1 Headboard 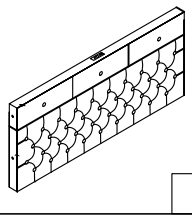 1PC	H2L&H2R Headboard Leg 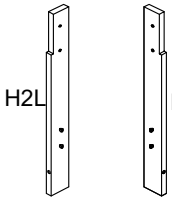 2PCS	H3 Aurora Star Projector Set 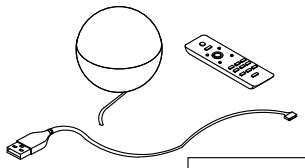 1 Set	H4 Headboard Backboard 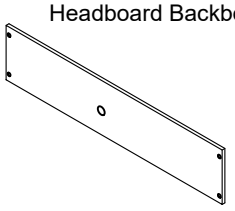 1PC
H5L&H5R Wingbacks 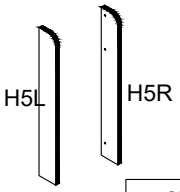 2PCS	H6 Headboatrd baff 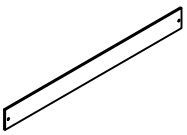 1PC	F1 Footboard 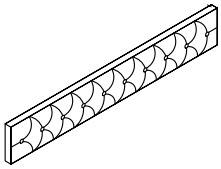 1PC	F2 Footboard Feet  2PCS
T1 Cross Beam 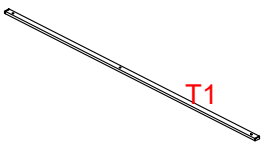 2PCS	T2 Slat 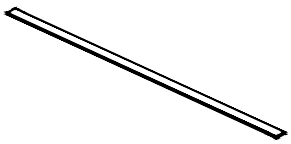 11PCS	T3 Slat Anchor Clip  22+2PCS	SL1 Head Side Rail Section 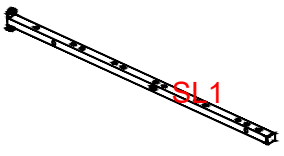 1PC

Assembly Instruction of (Bed)

SR1 Head Side Rail Section 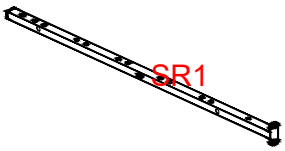 1PC	SL2 Foot Side Rail Section 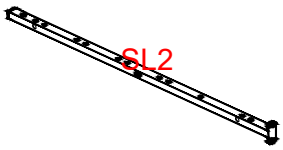 1PC	SR2 Foot Side Rail Section 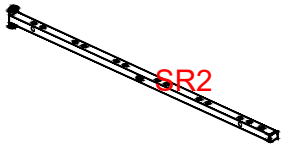 1PC	S3 Center Side Rail Leg 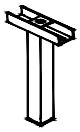 2PCS
M1 Head Middle Rail 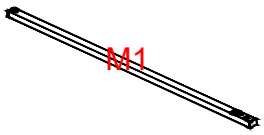 1PC	M2 Foot Middle Rail 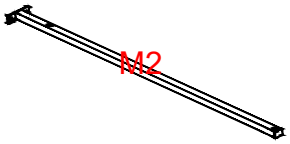 1PC	M3 Head Middle Leg 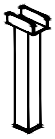 1PC	M4 Central Middle Leg 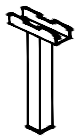 1PC
D1 Drawer Grid Base 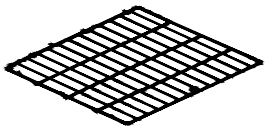 2PCS	D2 Fabric Drawer Shell 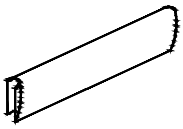 2PCS	D3 Drawer Caster  8PCS	D4 Drawer Panel 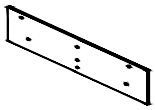 2PCS
D5 Side rail 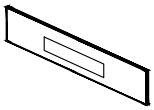 2PCS	U1 M8×45mm Screw with Washer  20+1PCS	U2 M8×35mm Screw with Washer  4+1PCS	U3 M8×95mm Screw with Washer 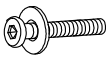 2PCS
U4 M8×40mm Screw with Washer  2PCS	U5 M8×25mm Screw with Washer  10+1PCS	U6 M6×20mm Screw with Washer  4+1PCS	U7 M6×15mm Screw with Washer  8+1PCS
U8 M6×15mm Screw  2PCS	U9 Screw  8+1PCS	U8L M8 L-Wrench  1PC	U6L M6 L-Wrench  1PC

Assembly Instruction of (Bed)

STEP 1

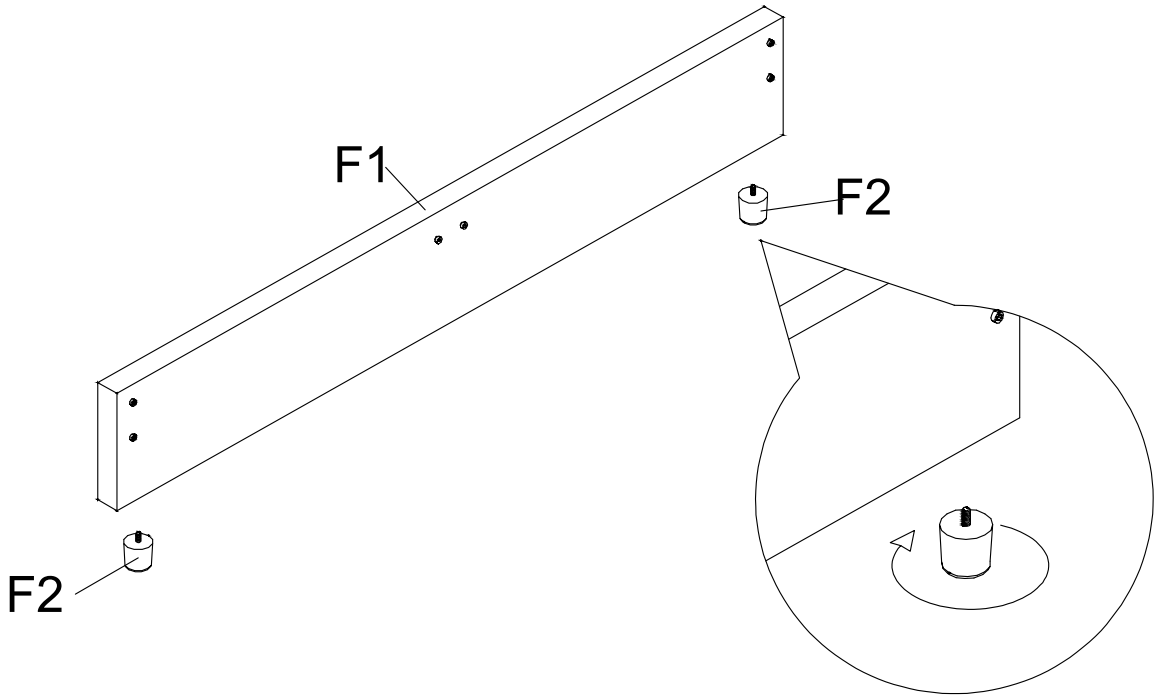

STEP 2

Noted that the middle cross beam,
the direction of the red arrow is the front

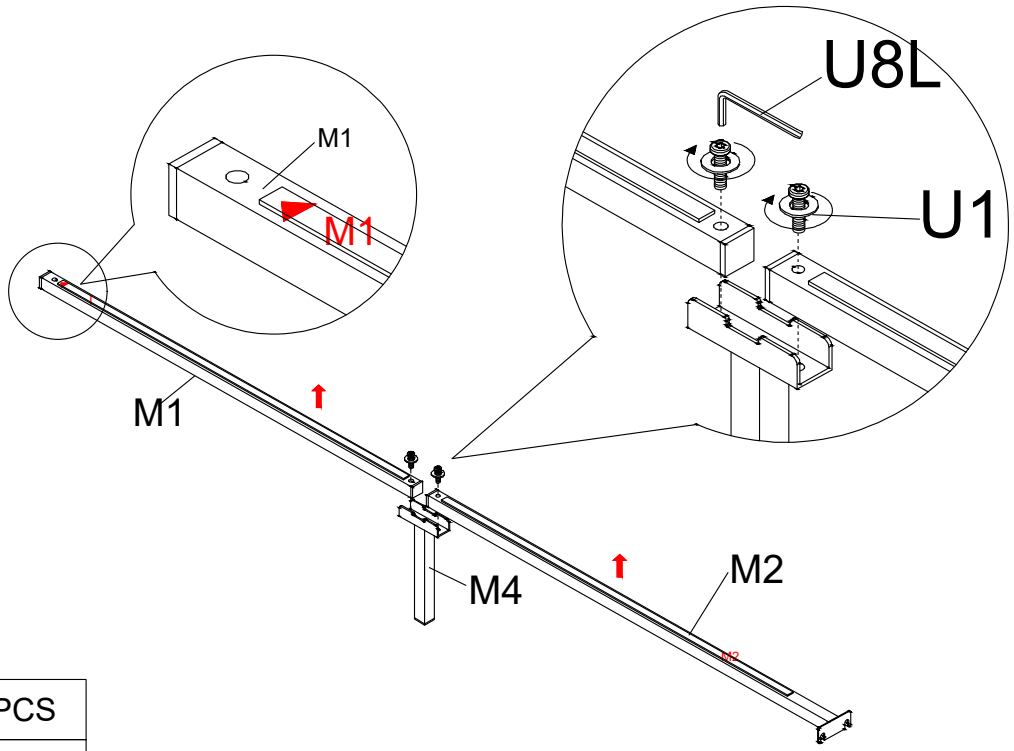

	U1 x 2PCS
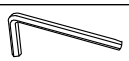	U8L x 1PC

Screws with small round pieces will make the bed more stable.

Assembly Instruction of (Drawer)

STEP 3

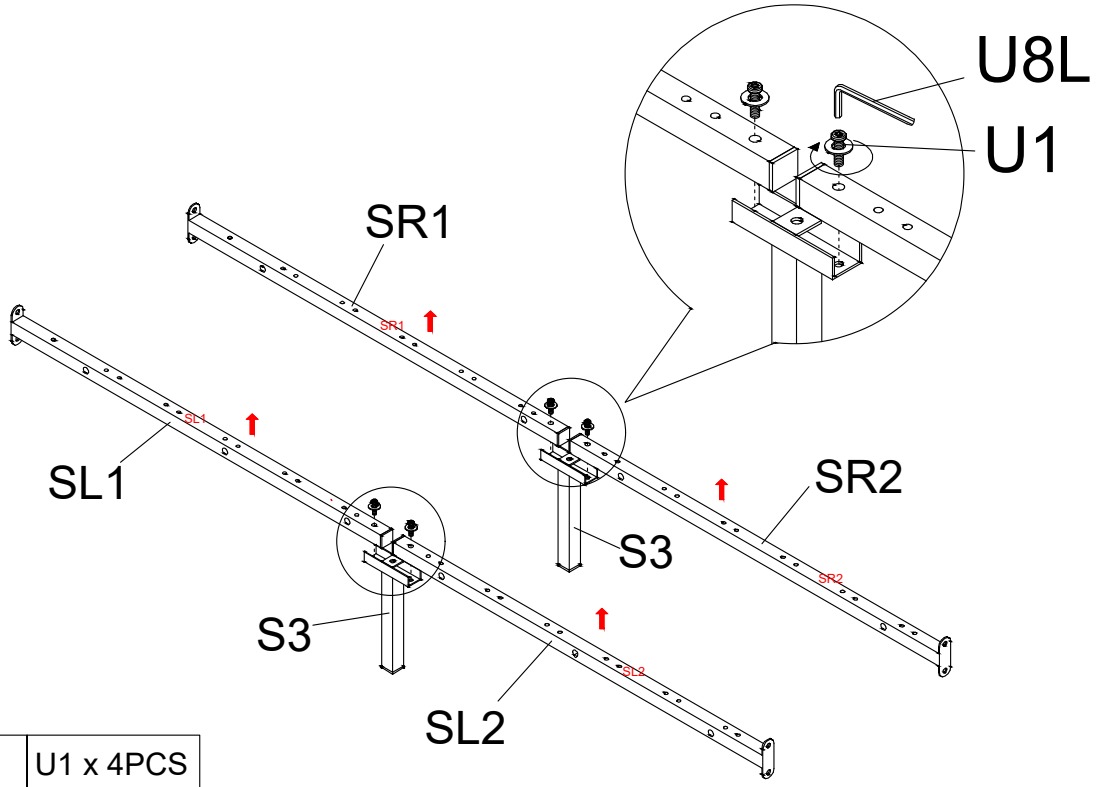

	U1 x 4PCS
	U8L x 1PC

Screws with small round pieces will make the bed more stable.

STEP 4

Please note that the side rails with holes are positioned to face out (for subsequent hanging of drawers)

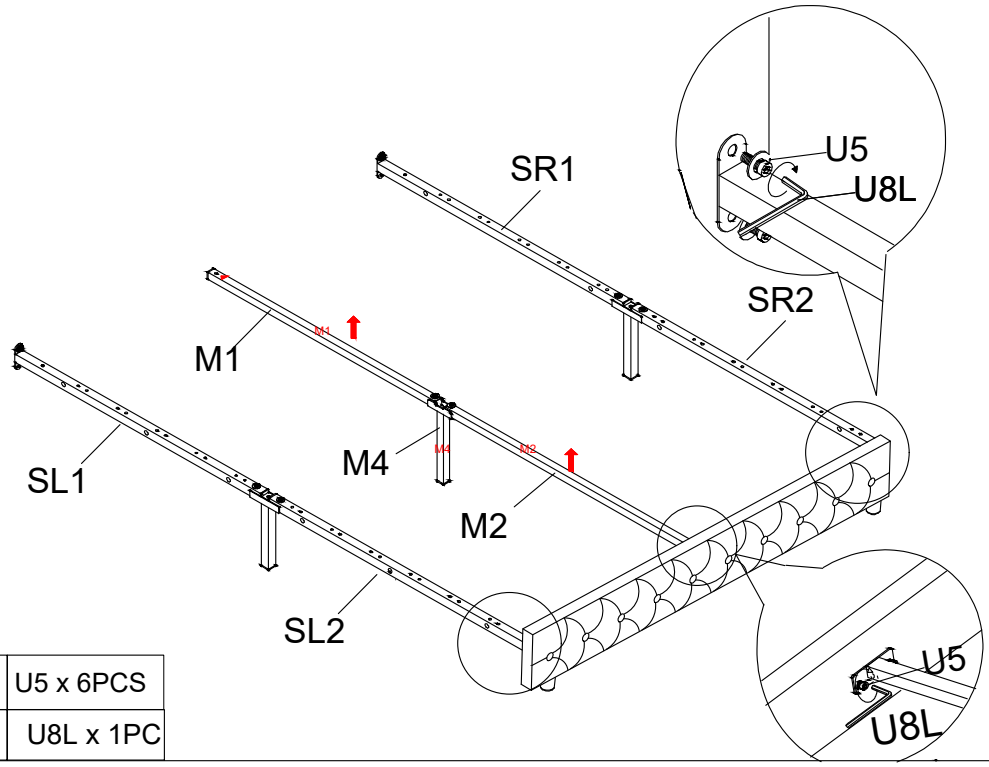

	U5 x 6PCS
	U8L x 1PC

Assembly Instruction of (Bed)

STEP 5

Please note that H2 is divided into LEFT and RIGHT, incorrect installation will result in subsequent accessories not being aligned

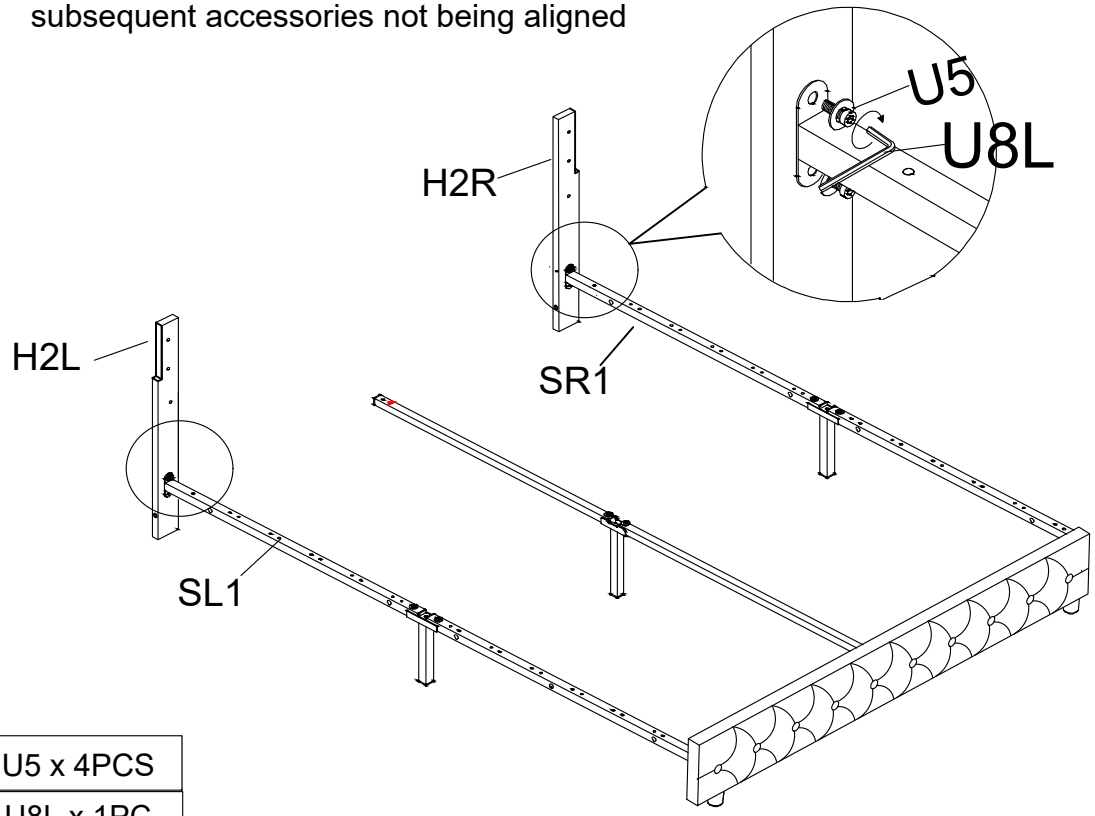

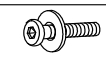	U5 x 4PCS
	U8L x 1PC

STEP 6

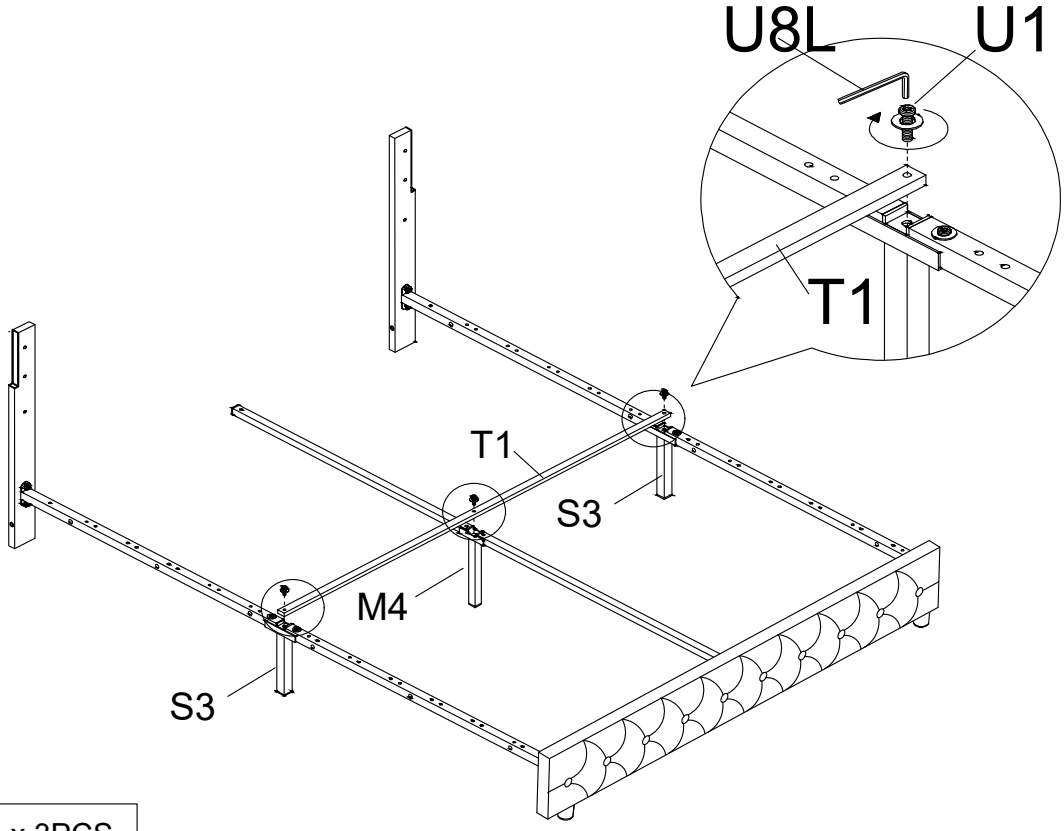

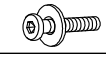	U1 x 3PCS
	U8L x 1PC

Screws with small round pieces will make the bed more stable.

STEP 7

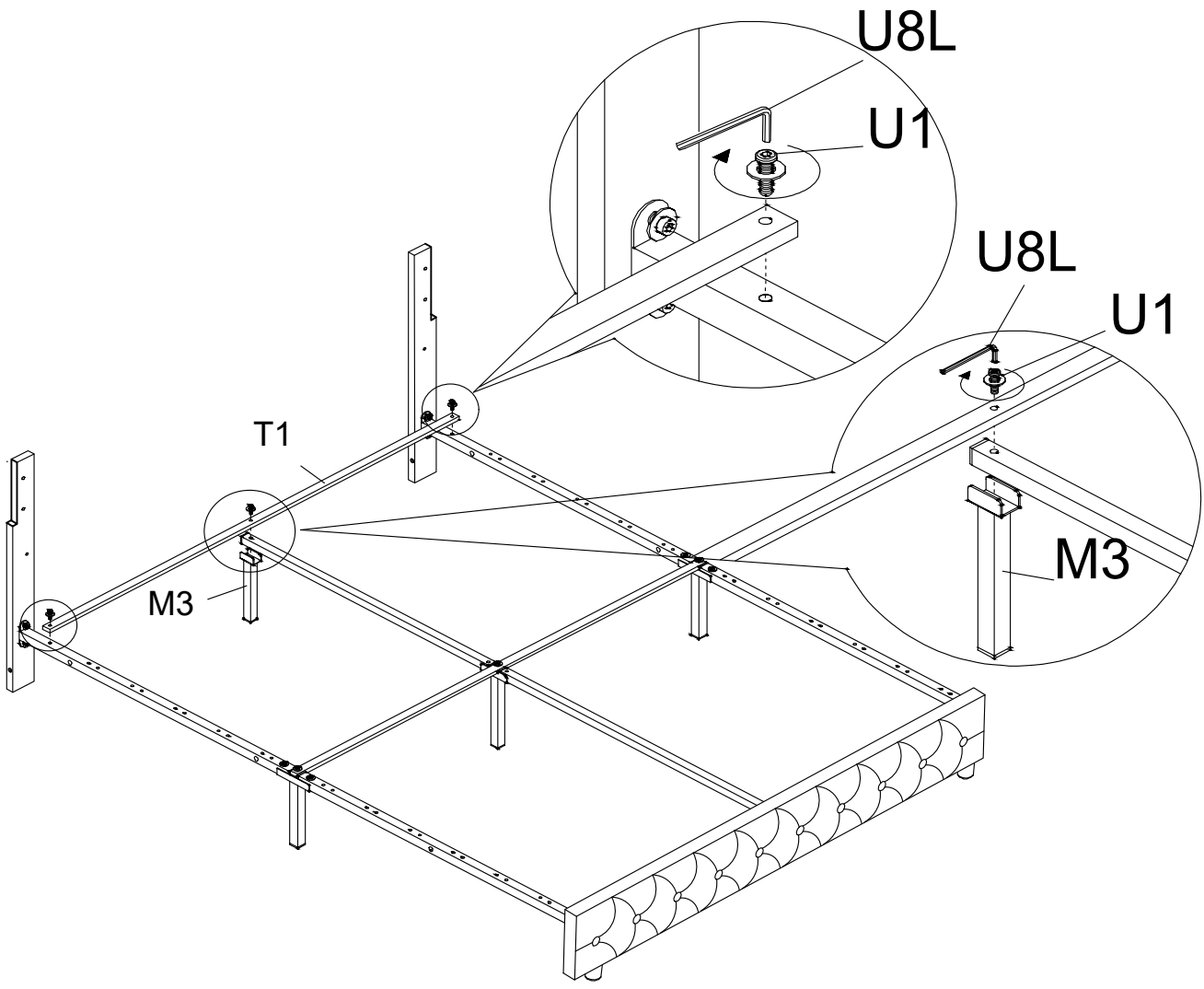

	U1 x 3PCS
	U8L x 1PC

Screws with small round pieces will make the bed more stable.

STEP 8

IMPORTANT : The washers are crucial for a tight fit. Do not forget to use them with the screws.

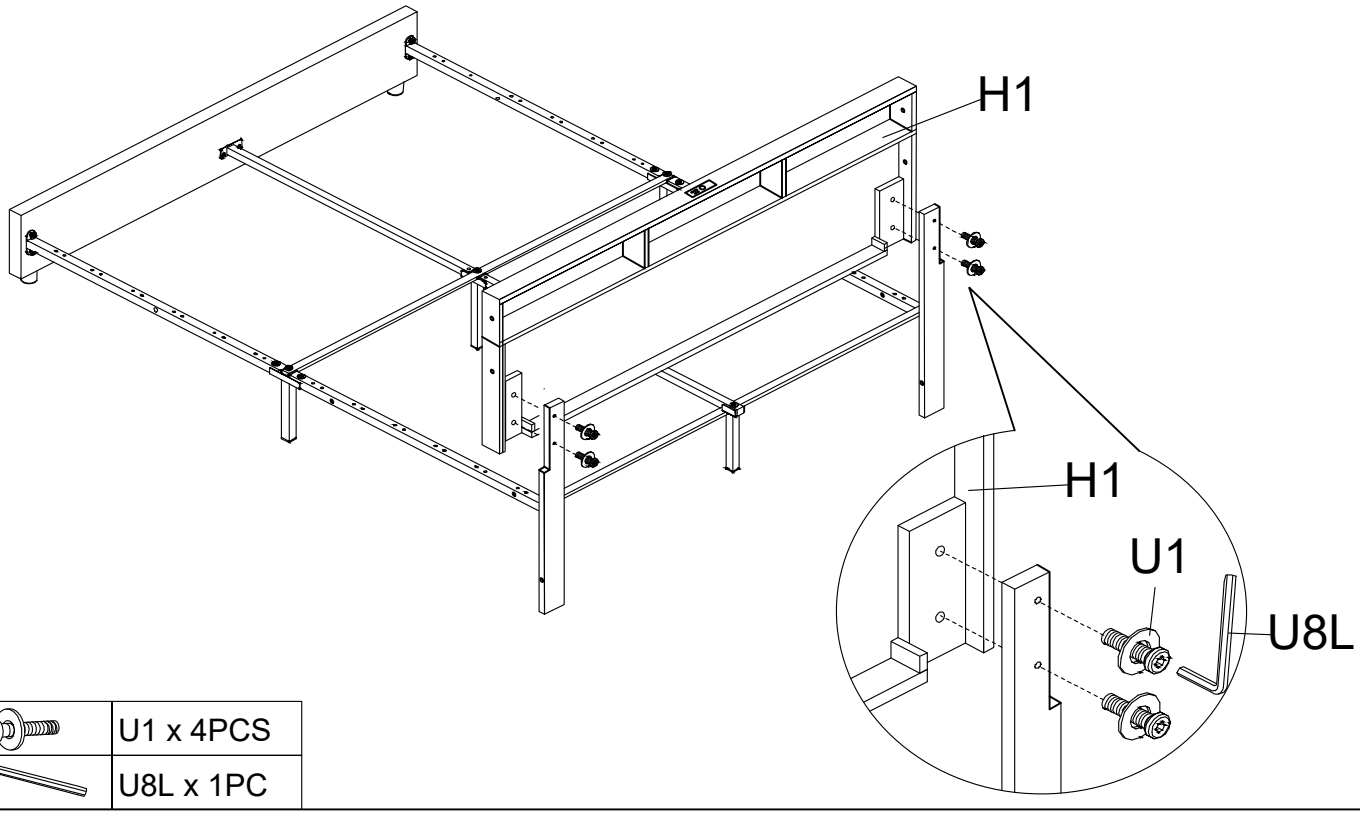

	U1 x 4PCS
	U8L x 1PC

STEP 9

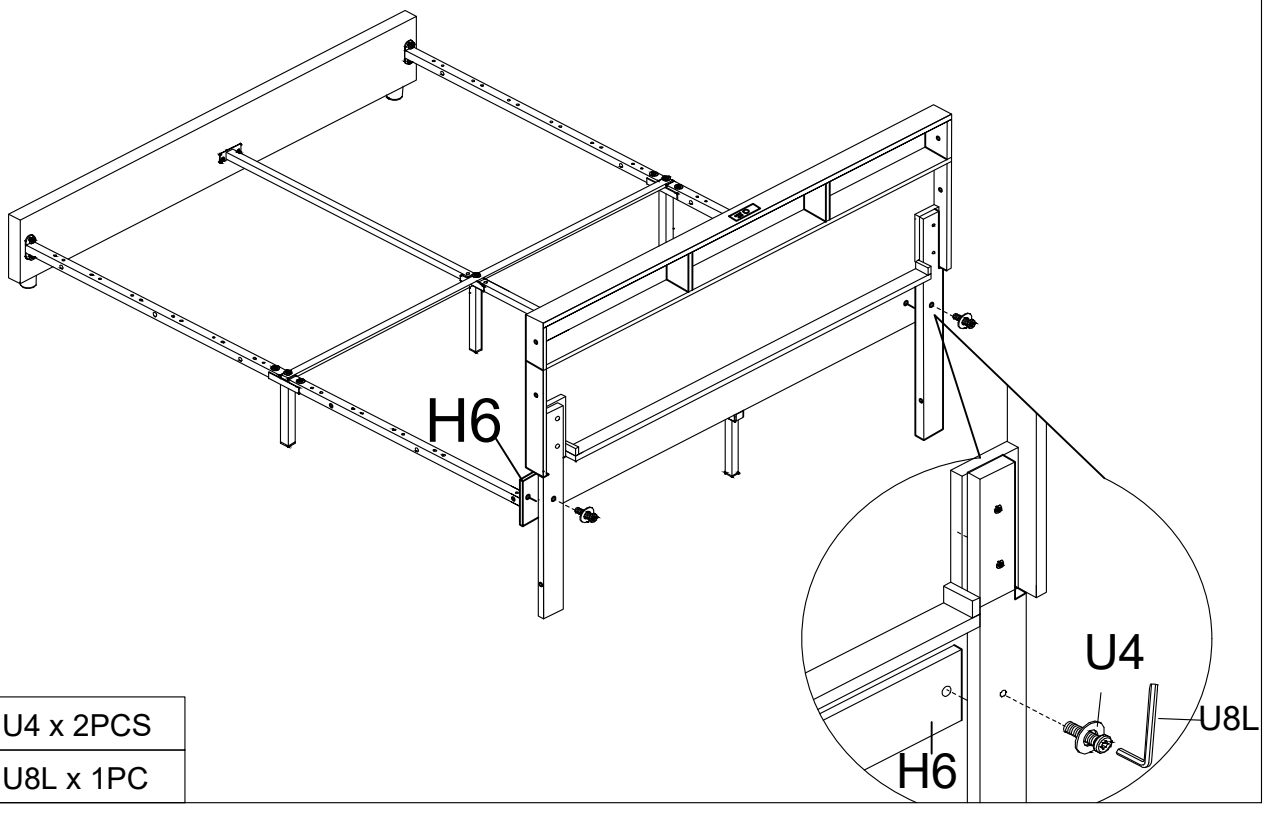

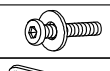	U4 x 2PCS
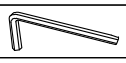	U8L x 1PC

Assembly Instruction of (Bed)

STEP 10

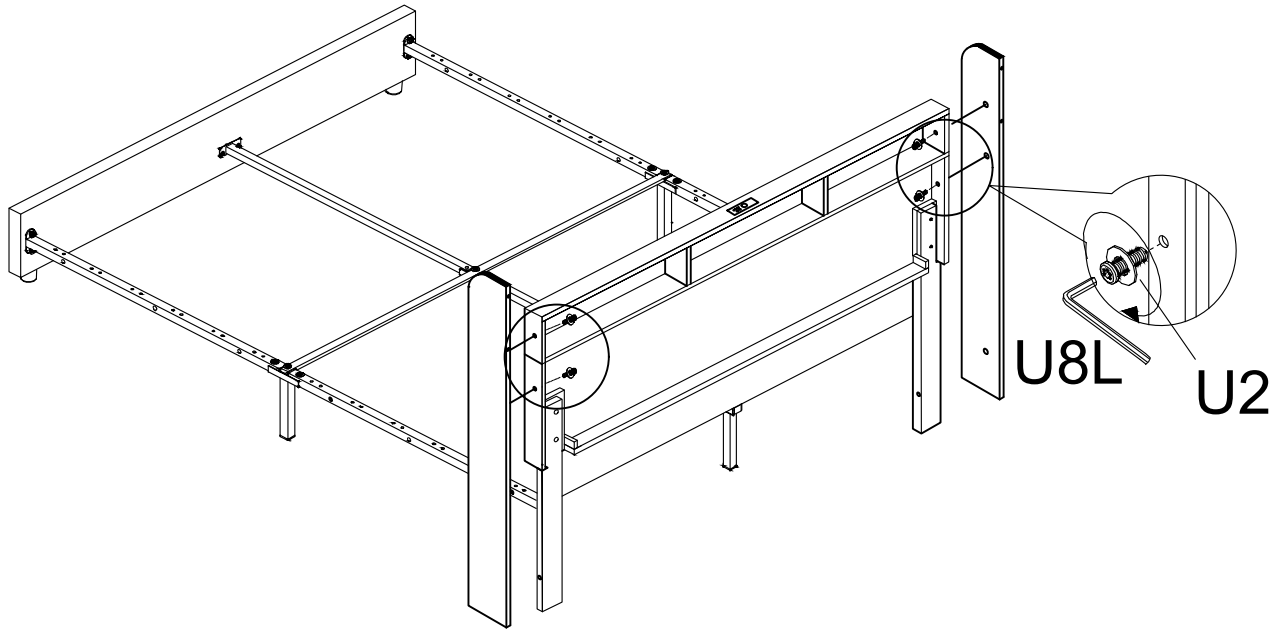

	U2 x 4PCS
	U8L x 1PC

STEP 11

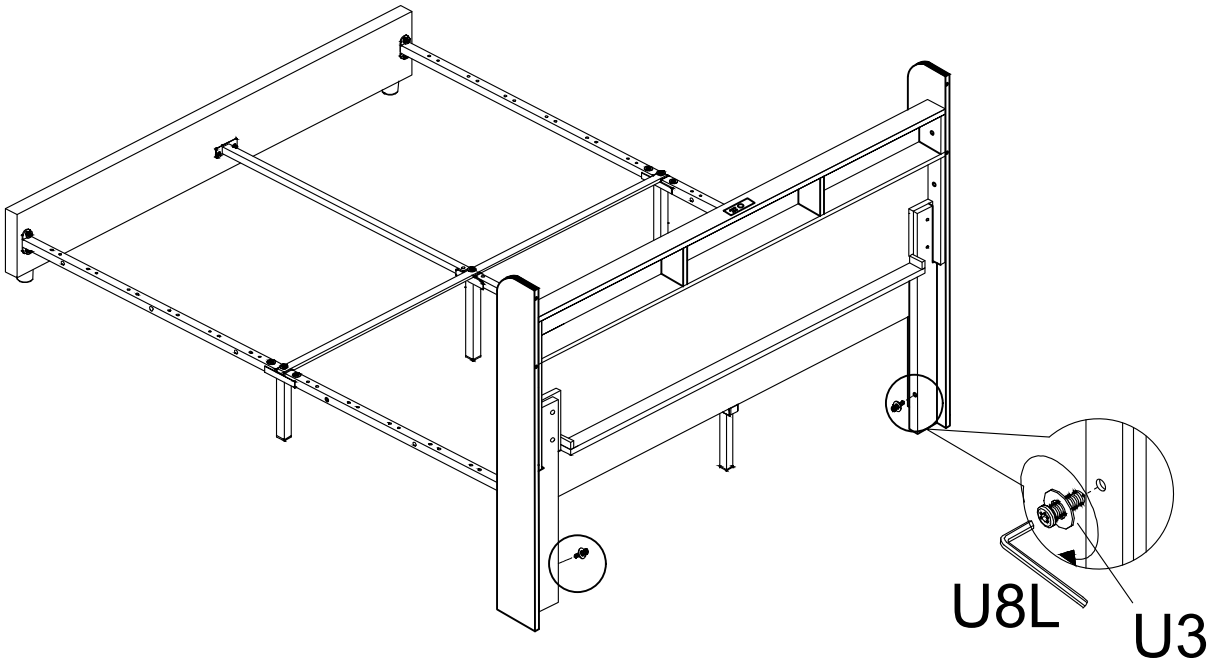

	U3 x 2PCS
	U8L x 1PC

Assembly Instruction of (Bed)

STEP 12

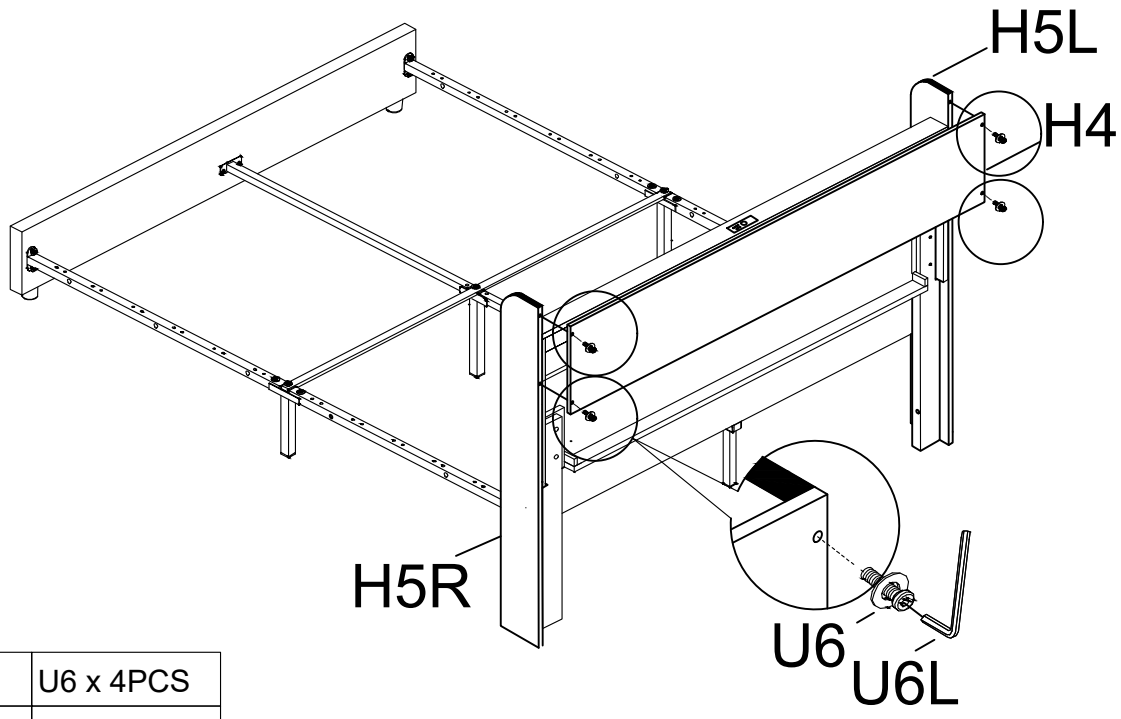

	U6 x 4PCS
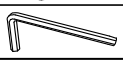	U6L x 1PC

STEP 13

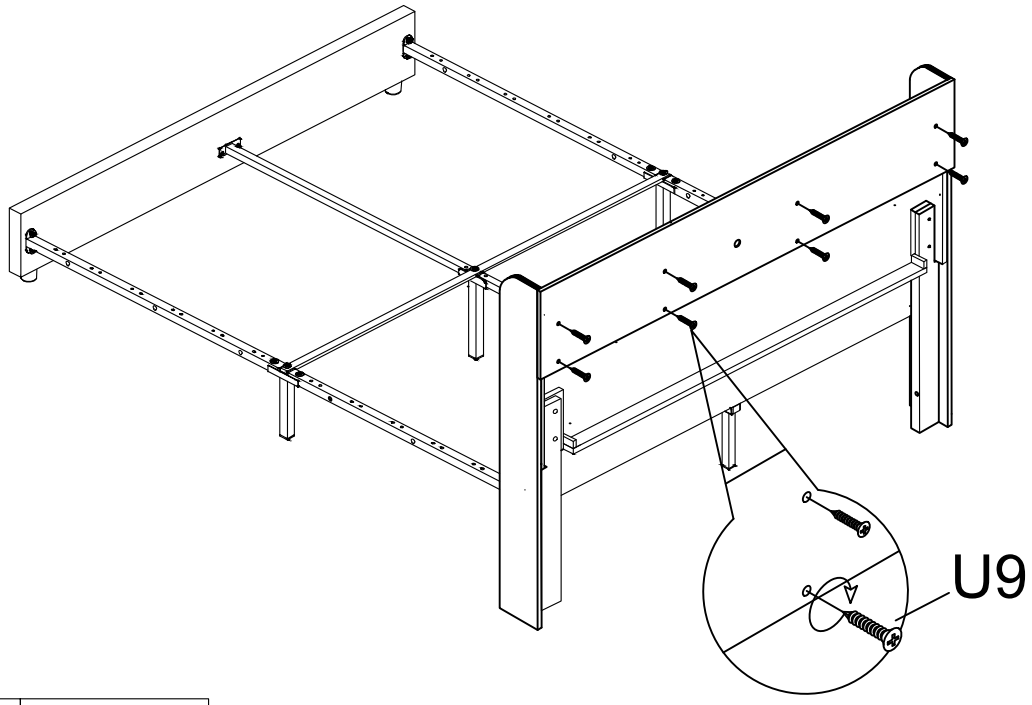

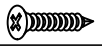	U9 x 8PCS

Assembly Instruction of (Bed)

STEP 14

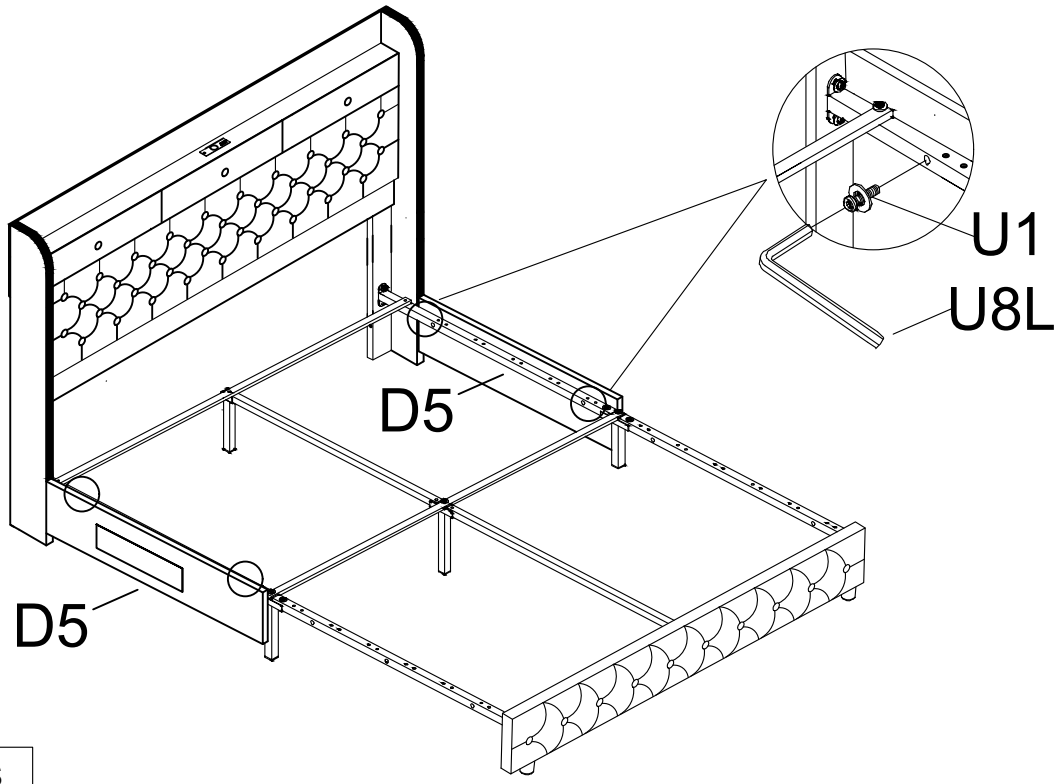

	U1 x 4PCS
	U8L x 1PC

STEP 15

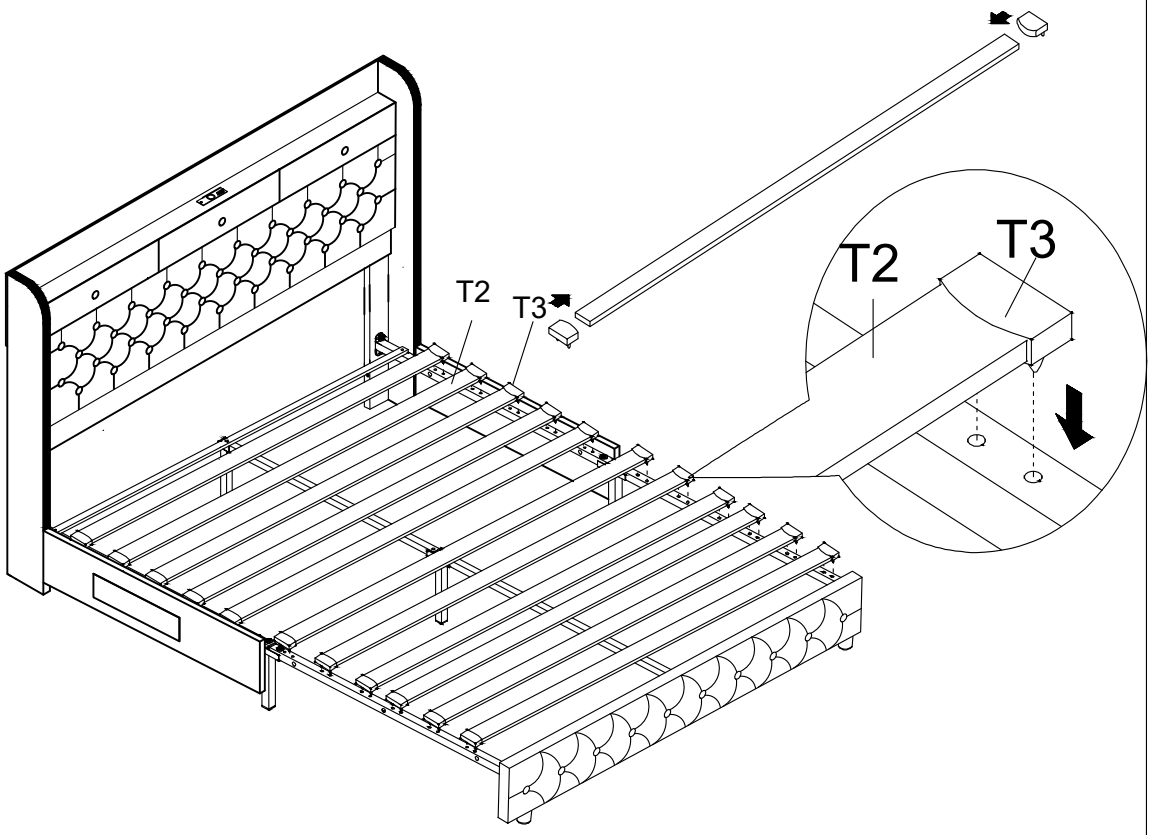

	T3 X 22PCS

STEP 16

Step 1: Connect the Power

Locate the Type-C port on the back of the headboard, directly below the base of the Aurora Star Projector. Plug one end of the power cable into this port.

Connect the other end of the power cable to your power adapter.

Step 2: Install the Aurora Star Projector

Insert the round end of the Aurora Star Projector connection cable into the round socket on the magnetic base located at the center of the headboard.

Place the Aurora Star Projector onto the magnetic base.

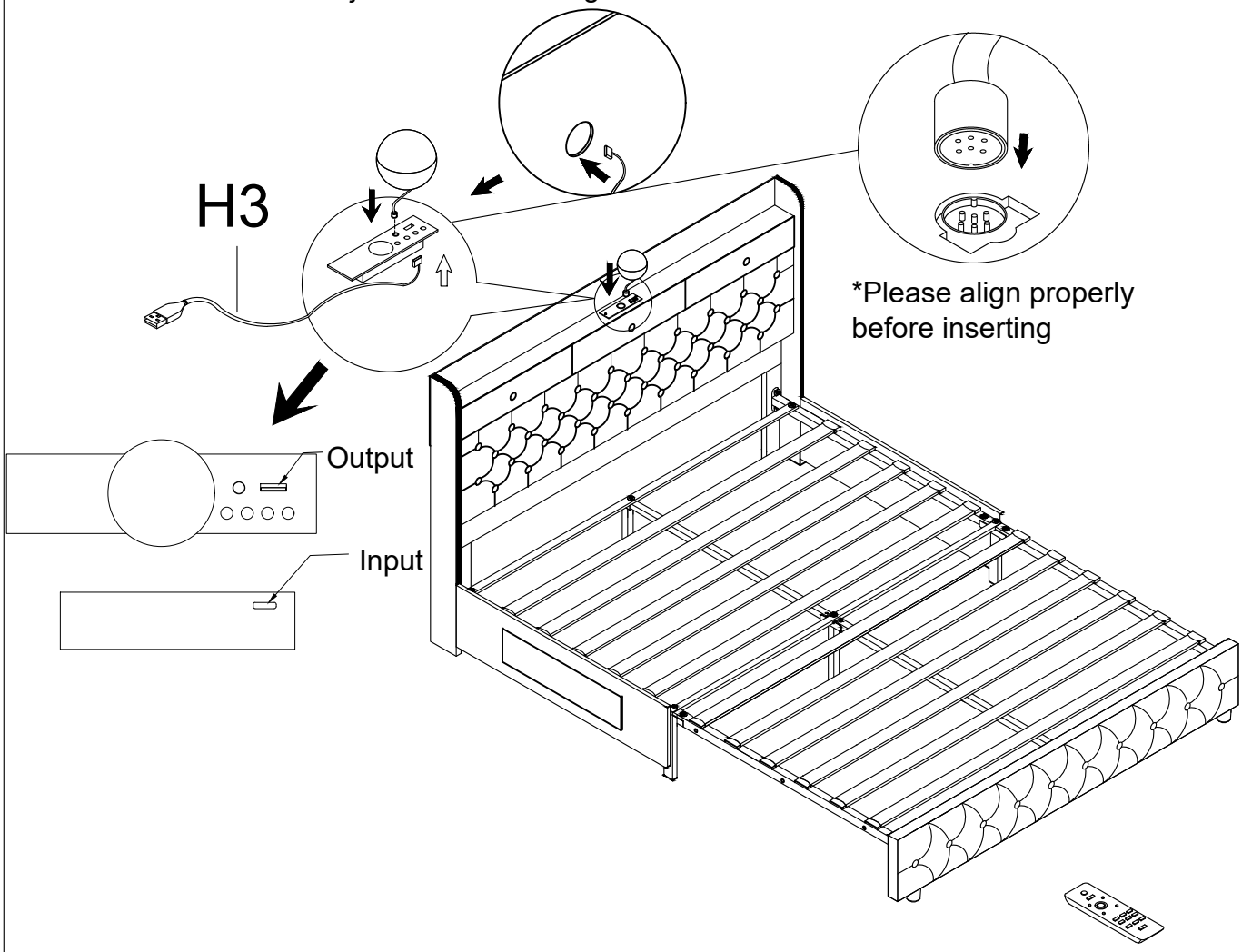

Tips:

1. To power on the Aurora Star Projector, press and hold the power button for 3 seconds. The light can connect to Bluetooth for music playback; please refer to the separate lighting manual for details.
2. The provided remote control does not have a power on/off function. Please use the power button on the base of the Aurora Star Projector on the headboard for switching the light on and off.

	H3 x 1SET

Assembly Instruction of (Drawer)

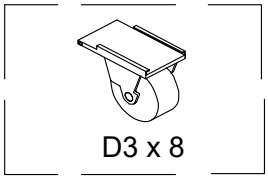
D3 x 8


U7 x 8


U8 x 2


U6L X 1

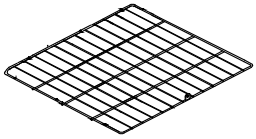
D1 x 2

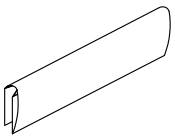
D2 x 2

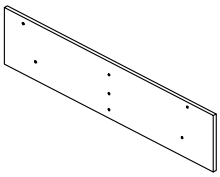
D4 x 2

STEP 17

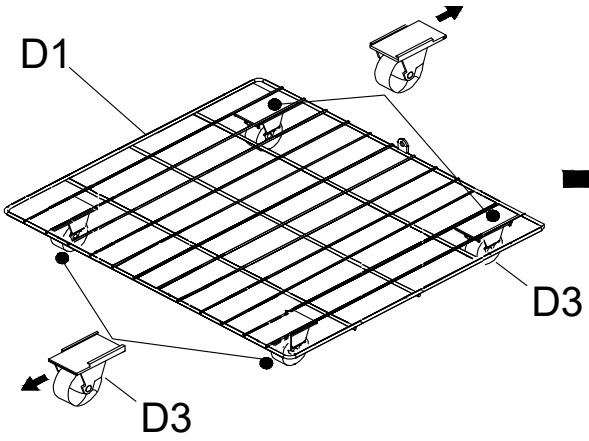

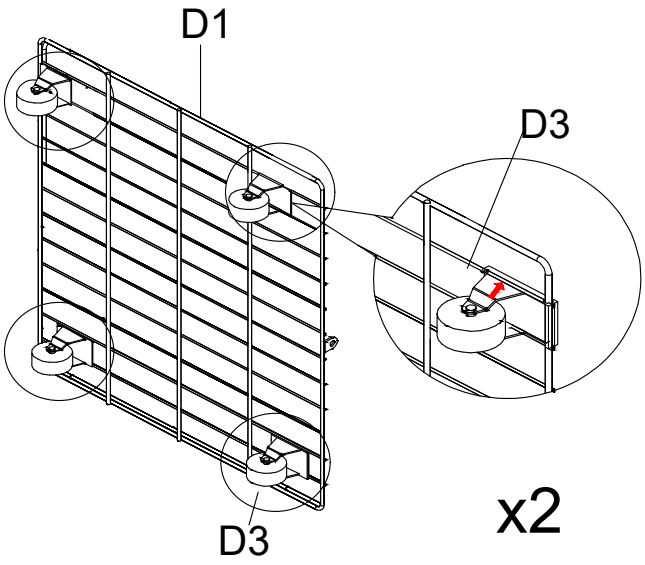

x2

	D3 x 4PCS Per Drawer

STEP 18

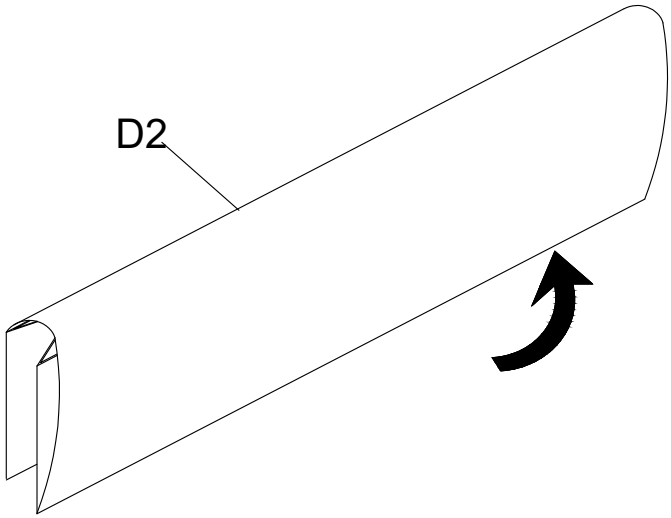

x2

Assembly Instruction of (Drawer)

STEP 19

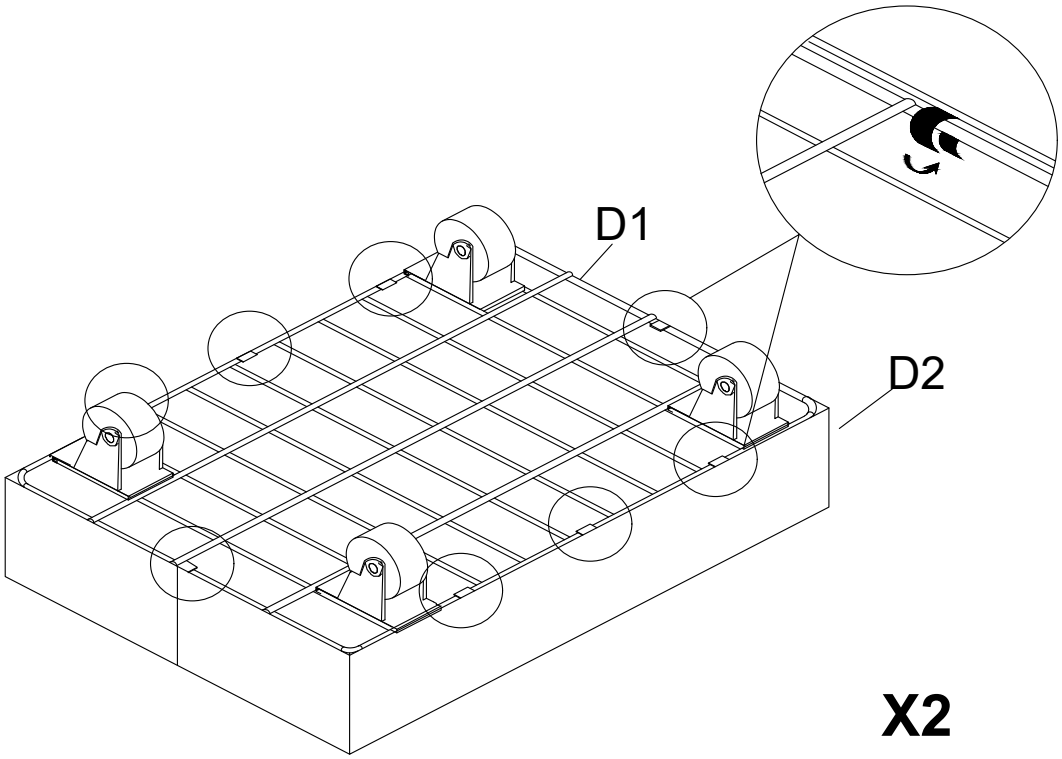

X2

STEP 20

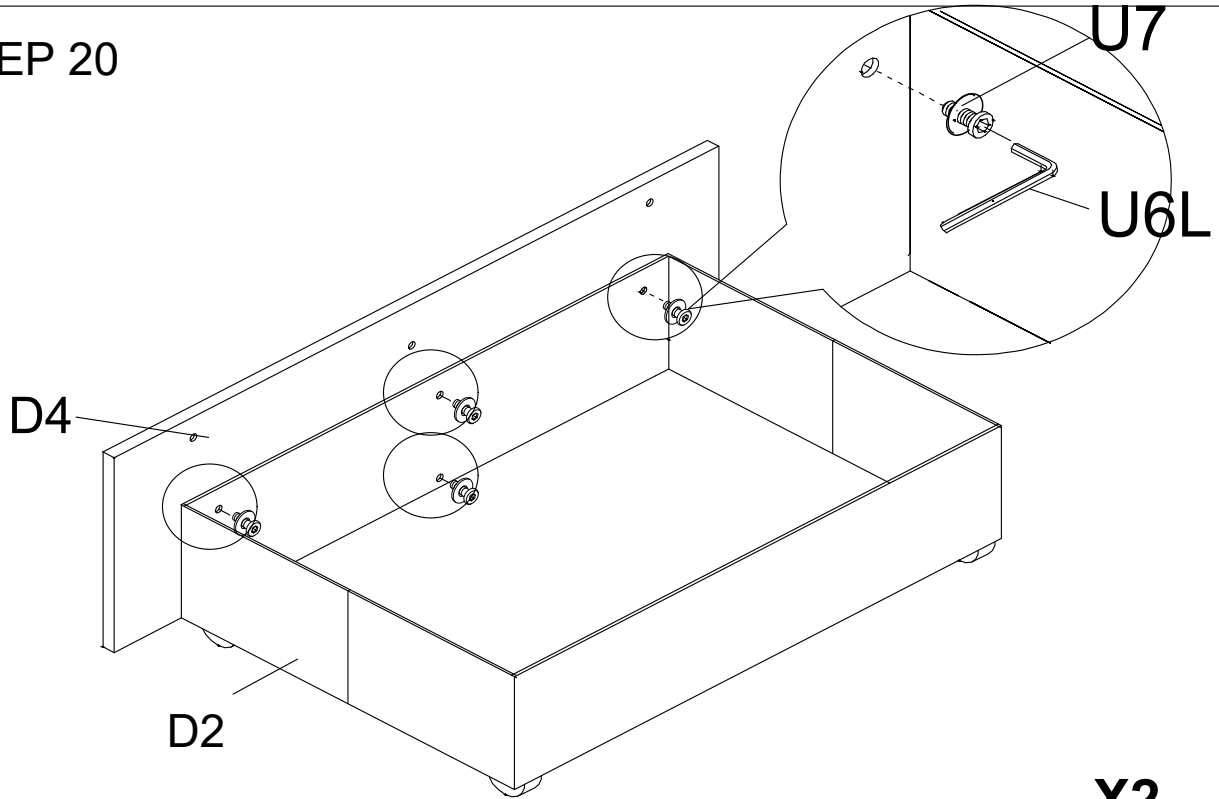

X2

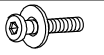	U7 x 4PCS Per Drawer
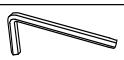	U6L x 1PC

Assembly Instruction of (Drawer)

STEP 21

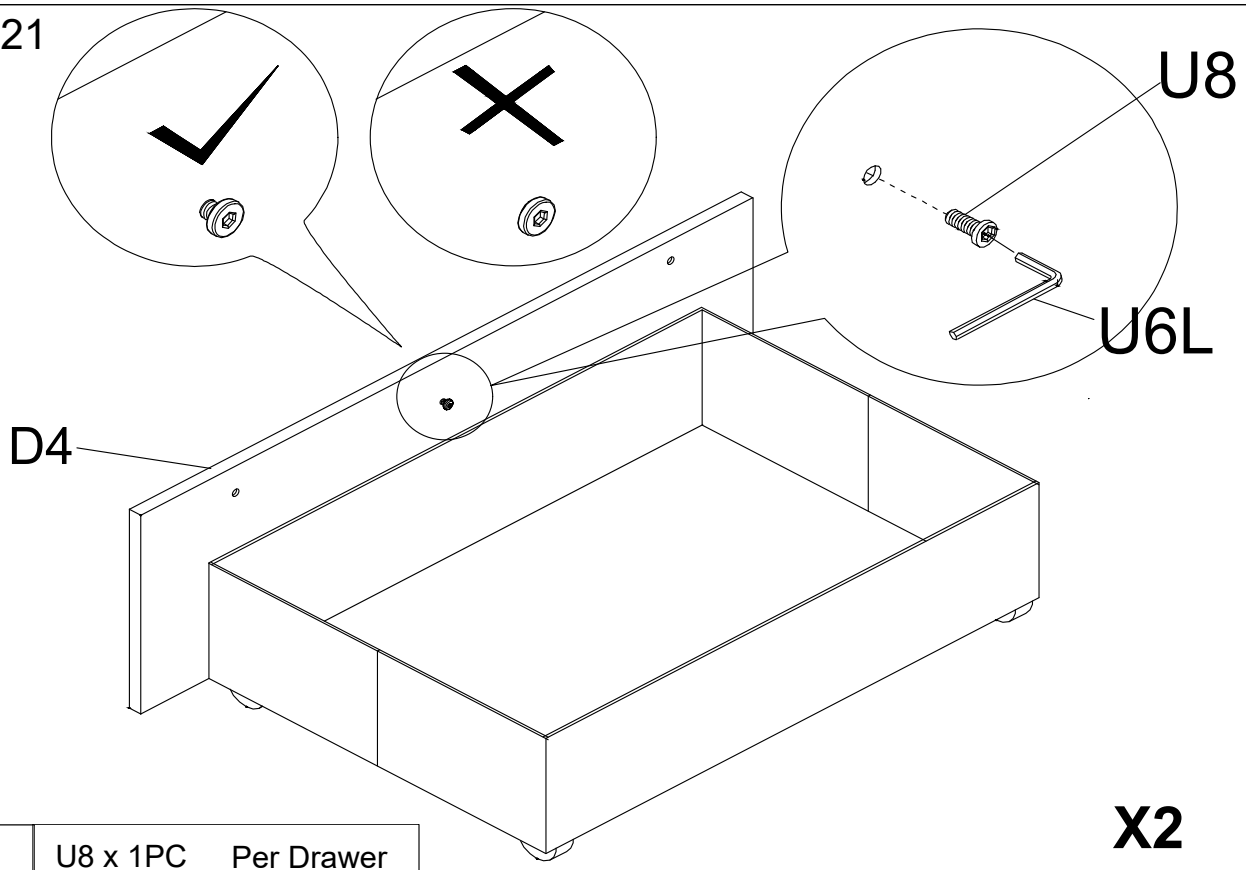

X2

	U8 x 1PC Per Drawer
	U6L x 1PC

STEP 22 Drawer panel screw hang into side cross beam hole.

1:This screw must be turned out slightly, leaving a distance of 2-3mm
2:Gently lift the drawer, align the screw with the gourd hole, and then snap it in
3:When pulling out the drawer, Lift the drawer gently,Align the screw with the gourd hole, and then pull it out

