5-Tier Bookcase
Item # HS202606-20
INSTRUCTION

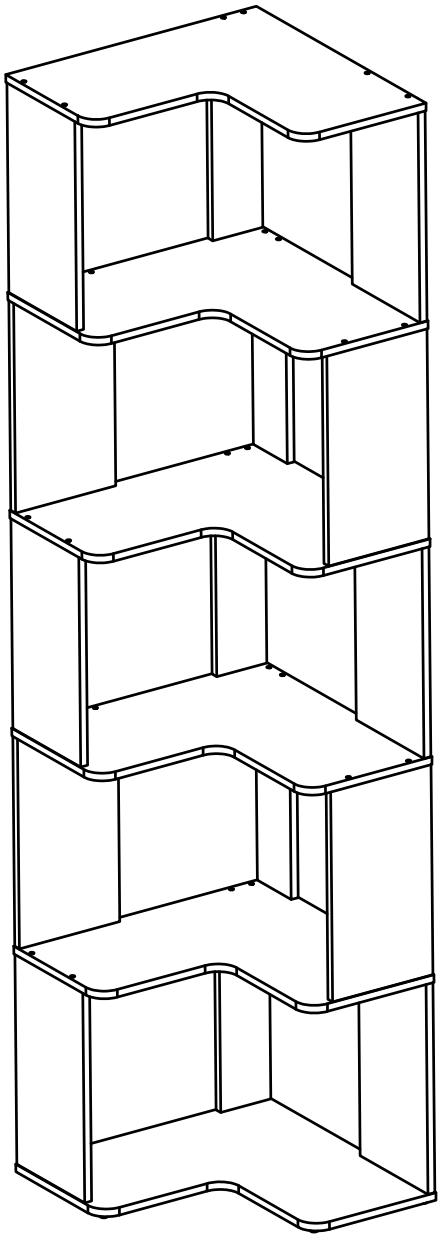

Main Components

Please check you have all the parts listed below

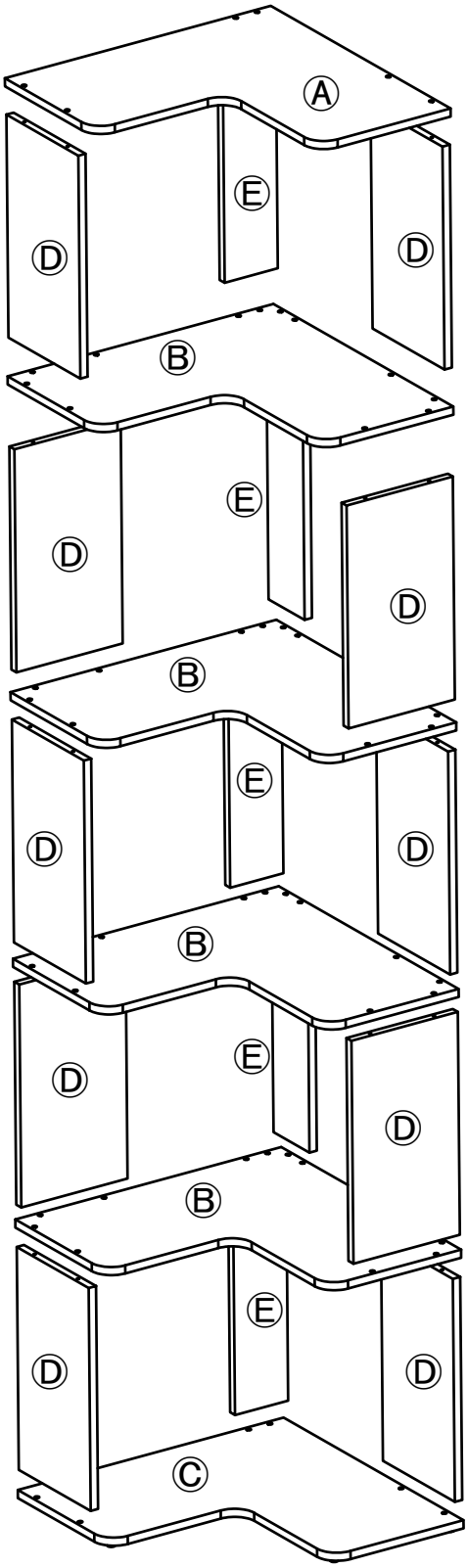

Component Panels & Part List

Please check you have all the parts listed below

Ⓐ

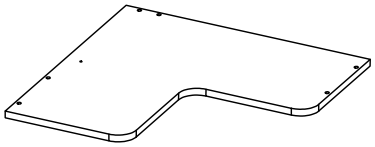

1PC

Ⓑ

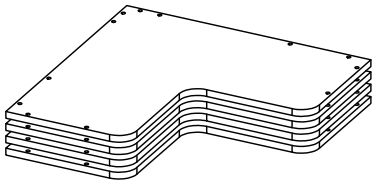

4PCS

Ⓒ

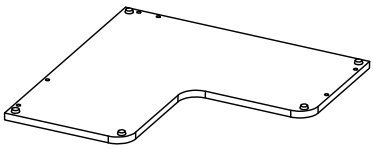

1PC

Ⓓ

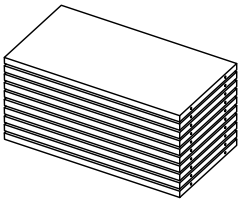

10PCS

Ⓔ

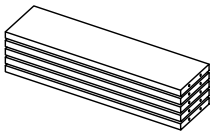

5PCS

Fixings, Fittings And Tools

Please check all the fittings listed below

Note: The quantities below are the correct amount to complete the assembly.
In some case more fittings may be supplied than be required.

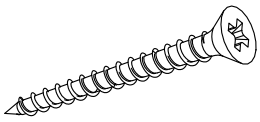

① Ø4*38mm
60+2PCS

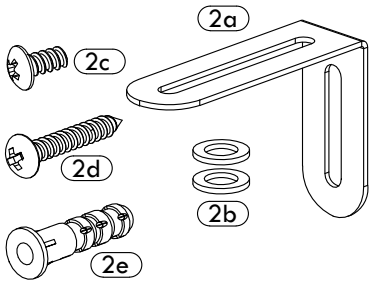

② 1SET



③ Ø12mm
54+2PCS

Step 1

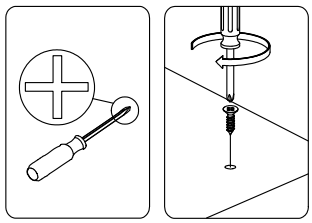

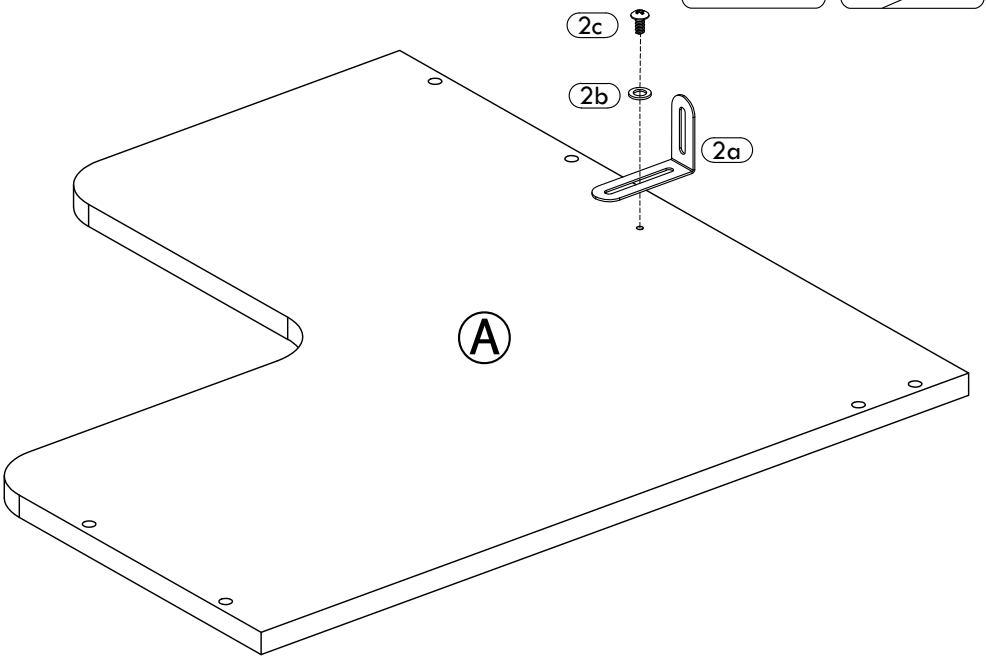

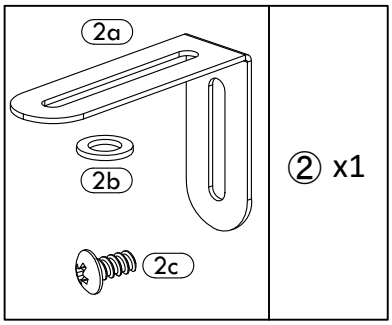

② x1

Step 2

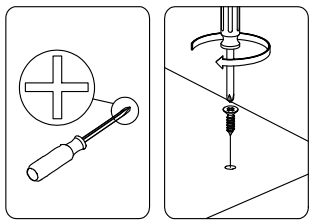

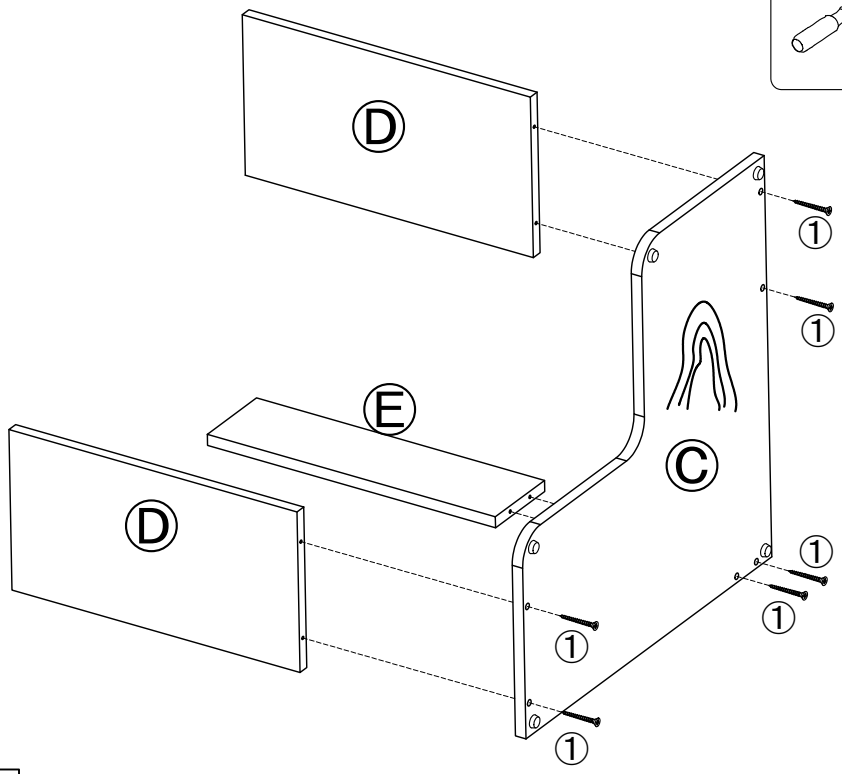

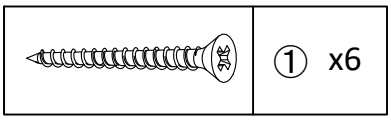

① x6

Step 3

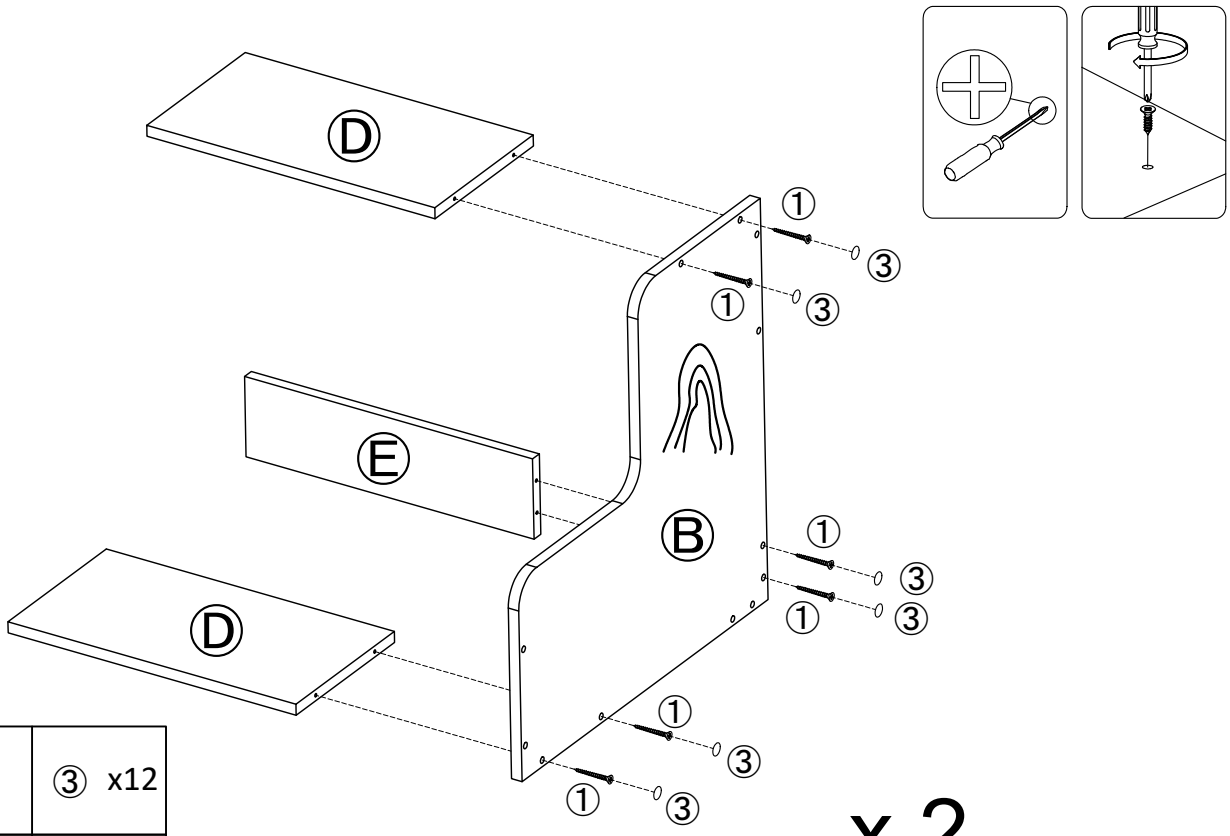

	③ x12
	① x12

Step 4

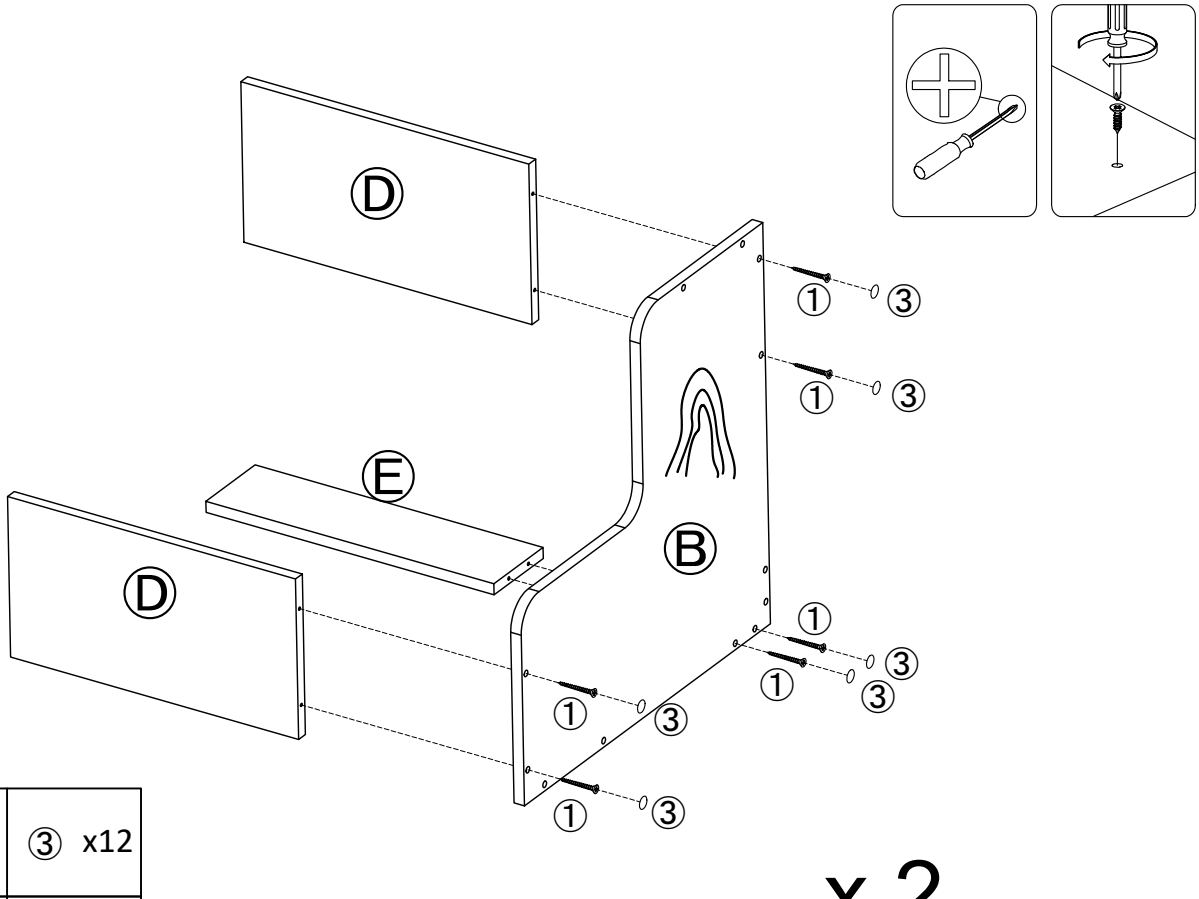

	③ x12
	① x12

Step 5

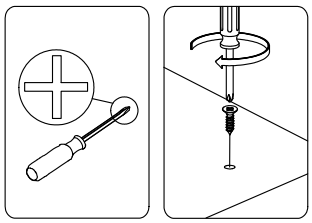

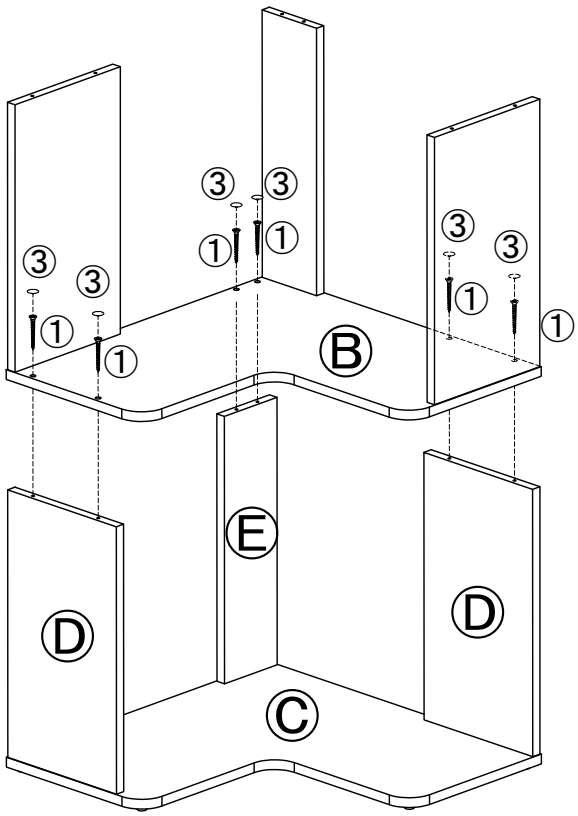

	③ x6
	① x6

Step 6

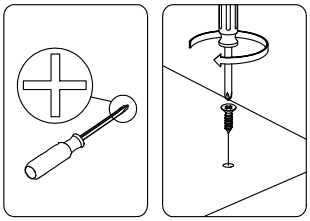

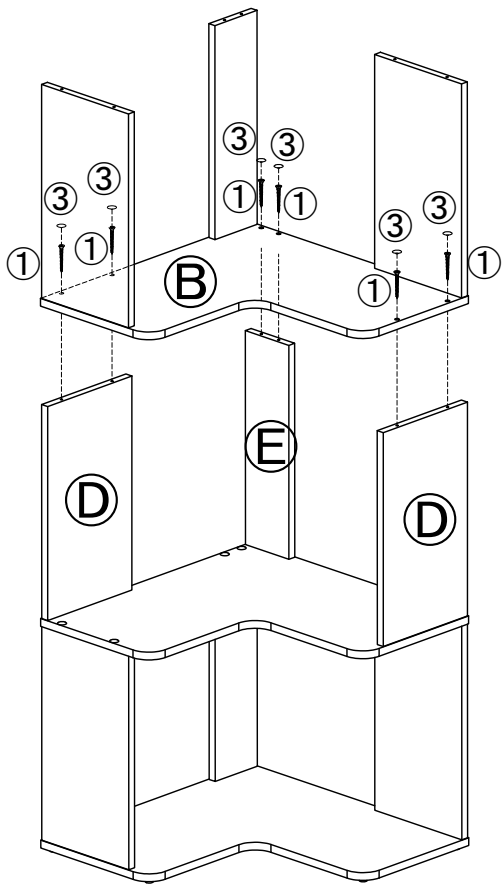

	③ x6
	① x6

Step 7

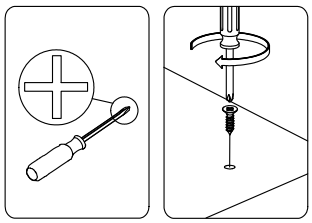

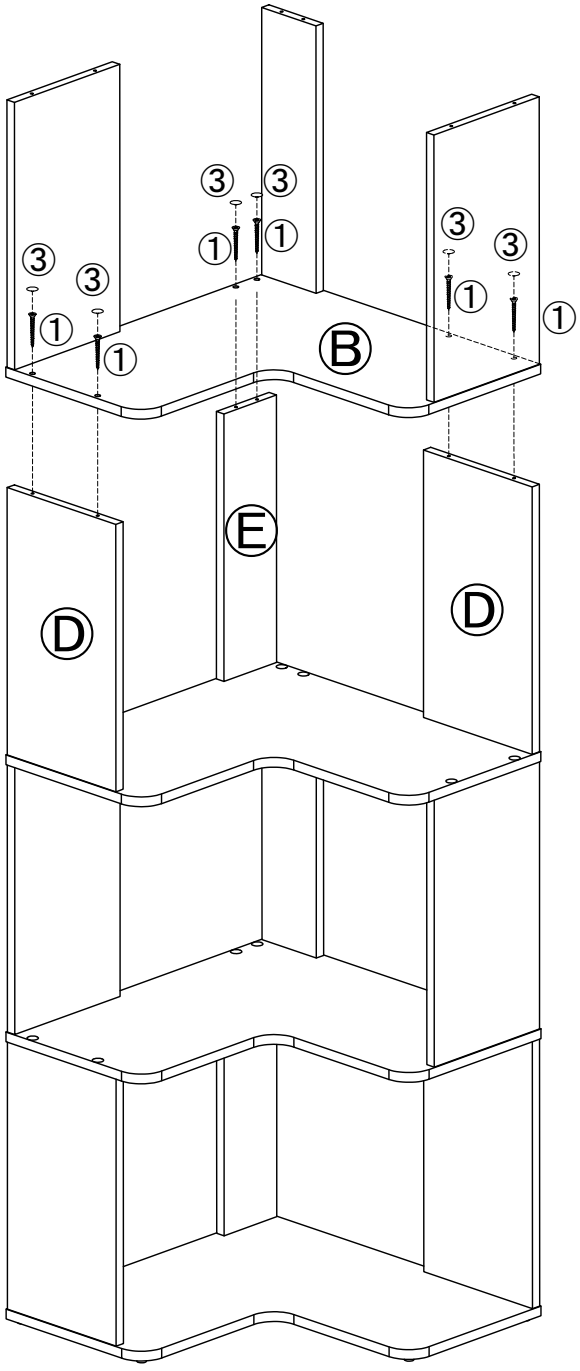

	③ x6
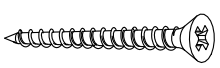	① x6

Step 8

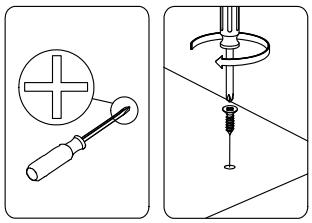

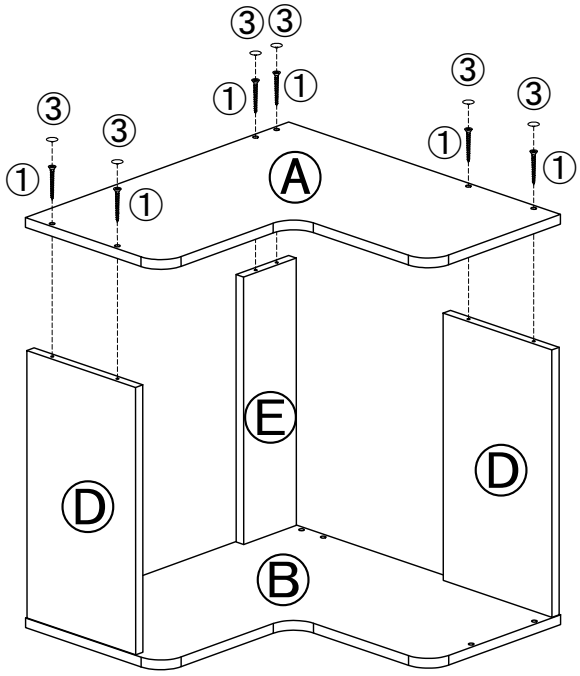

	③ x6
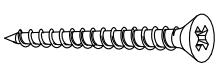	① x6

Step 9

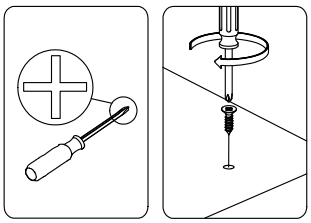

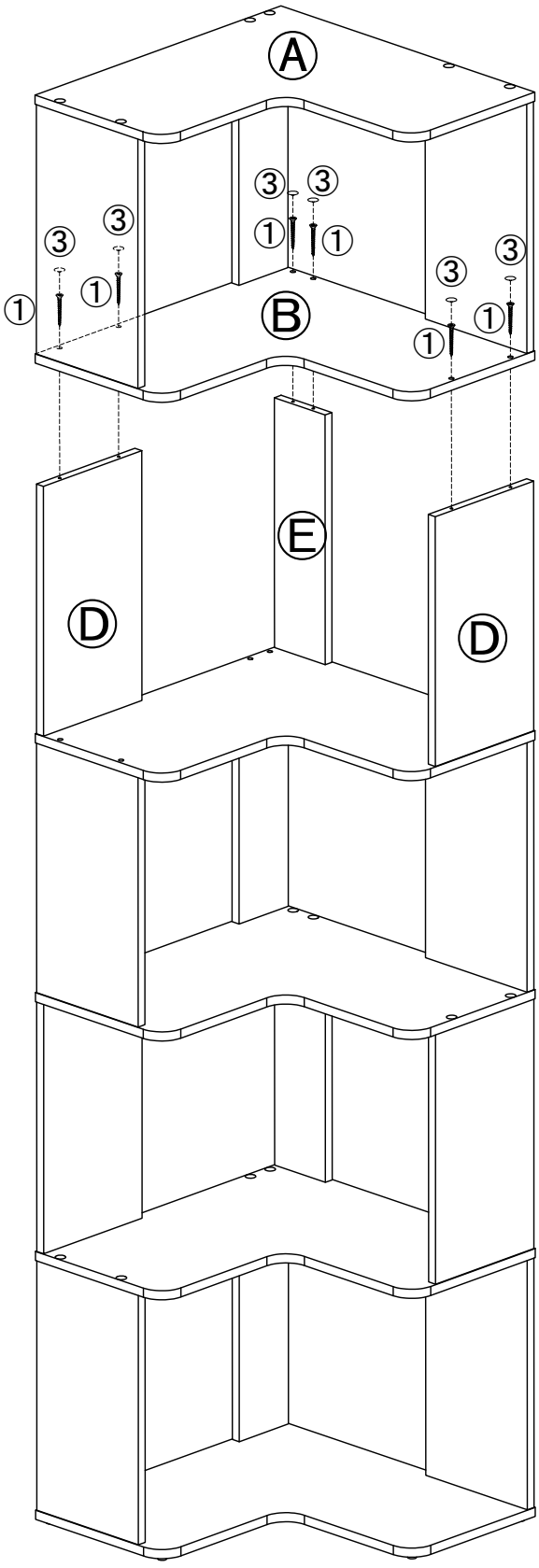

	③ x6
	① x6

Step 10

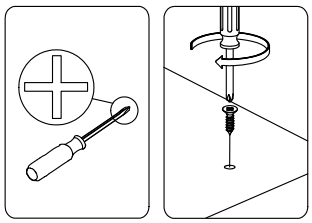

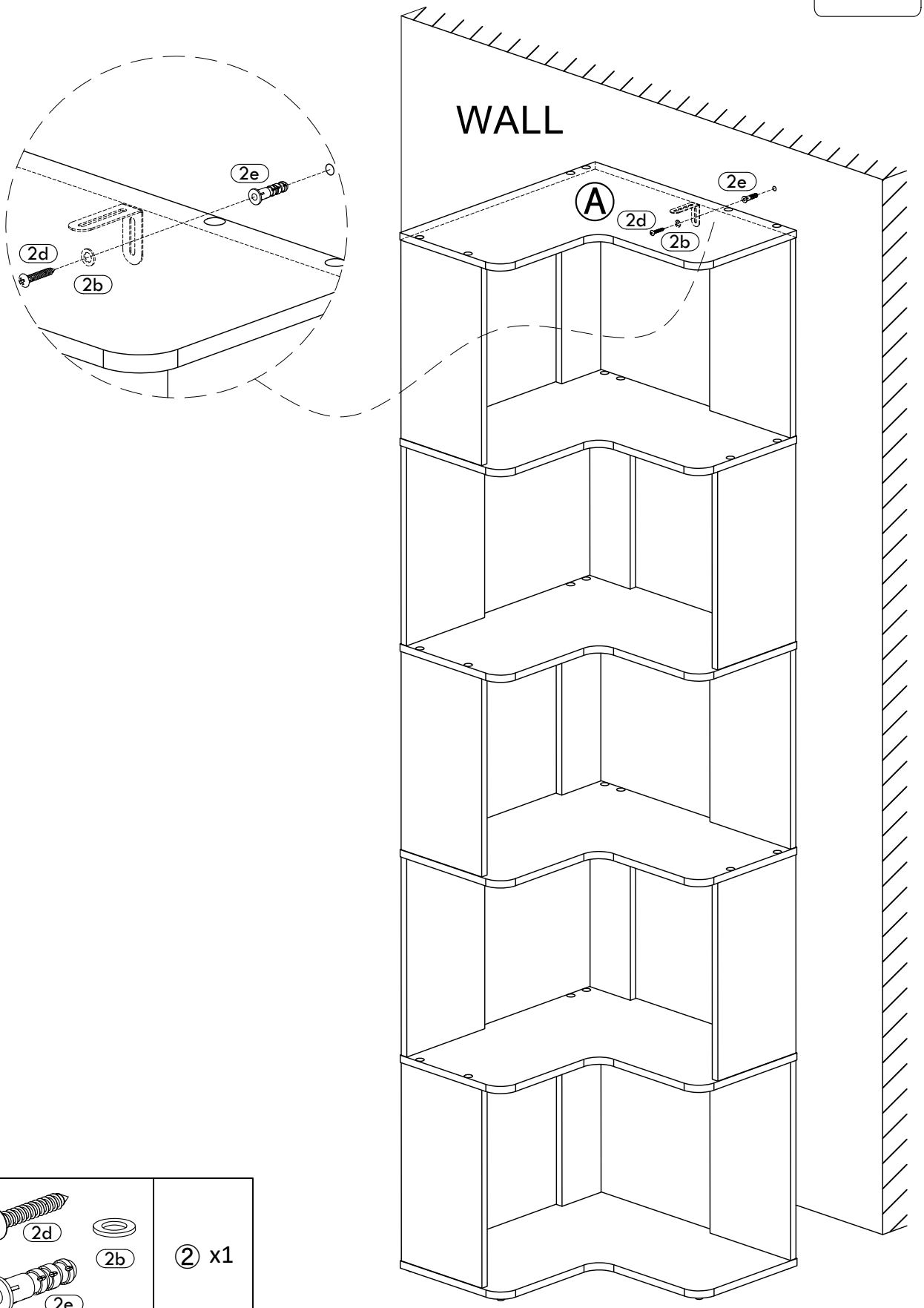

	② x1