Please note: We provide fast after-sales service, don't worry if there is something wrong with the package you received. Please 8contact us first, we will reply you in time!

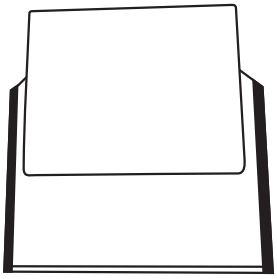

Ax1

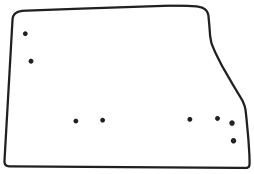

Bx1

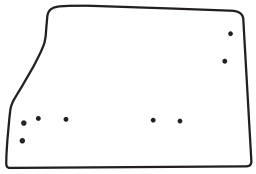

Cx1

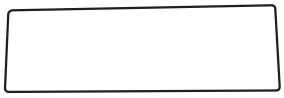

Dx1

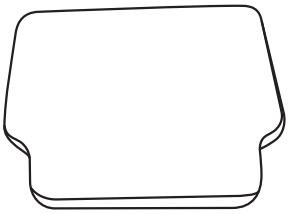

Ex1

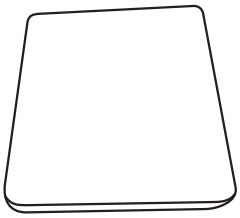

Fx1

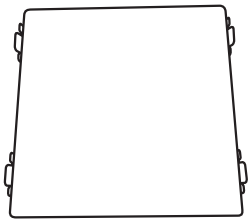

Gx1

Hx2

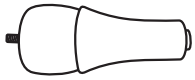

Ix2

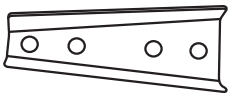

Jx2

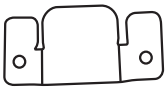

Kx4

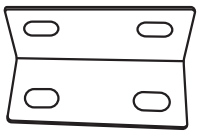

Lx2

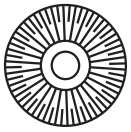

Mx2

M6x16mm

Nx28

Ox1

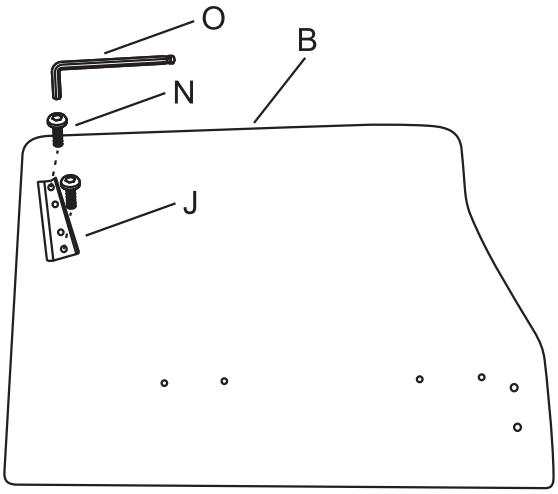

1

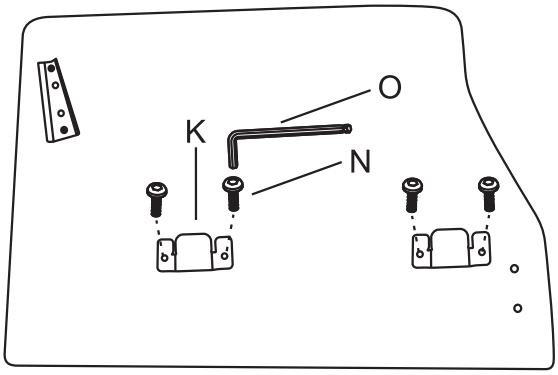

2

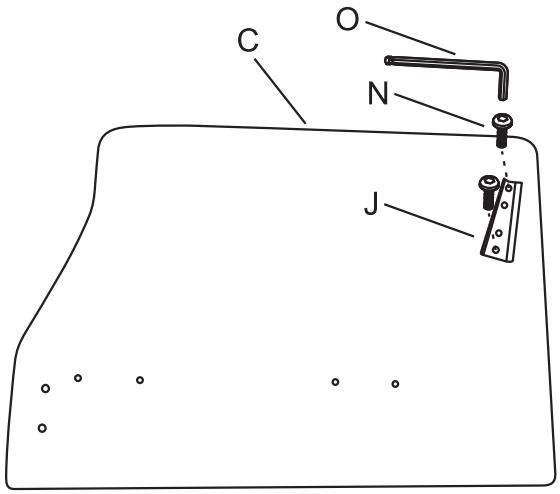

3

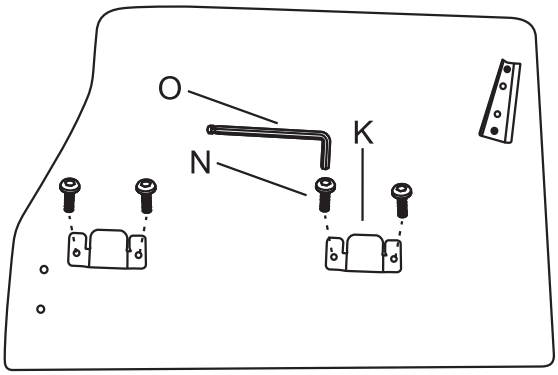

4

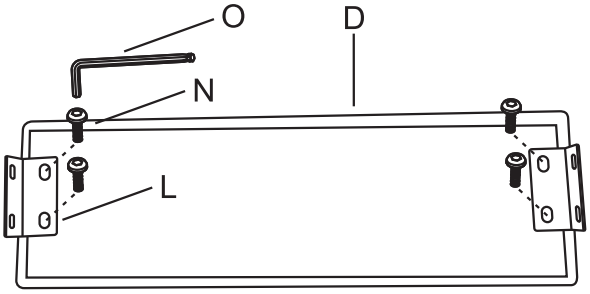

5

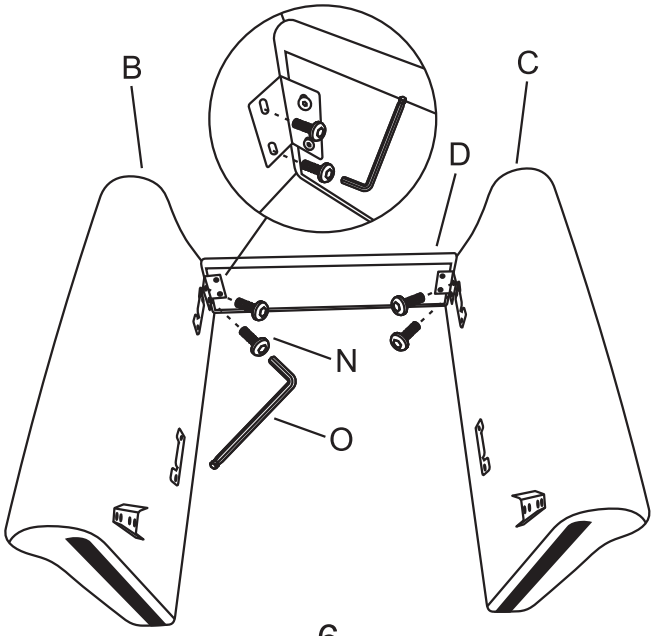

6

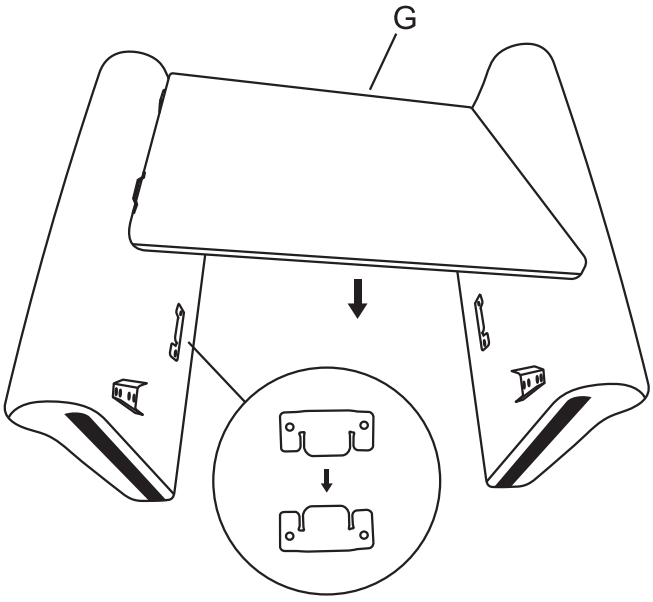

7

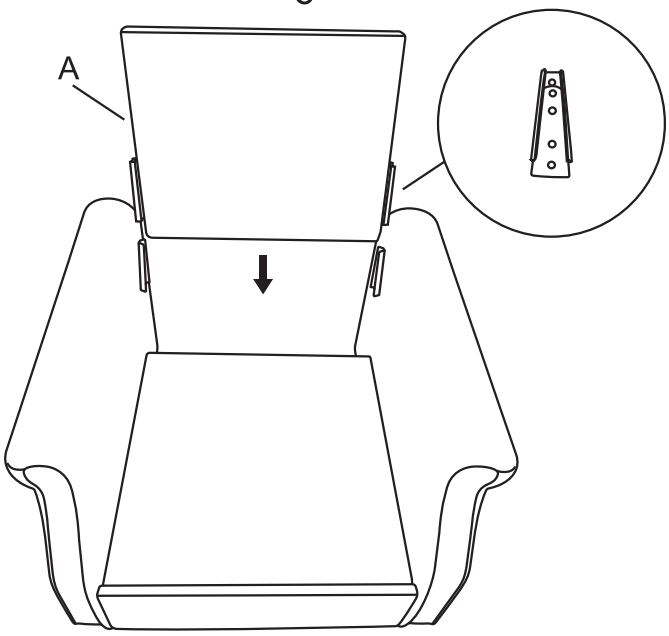

8

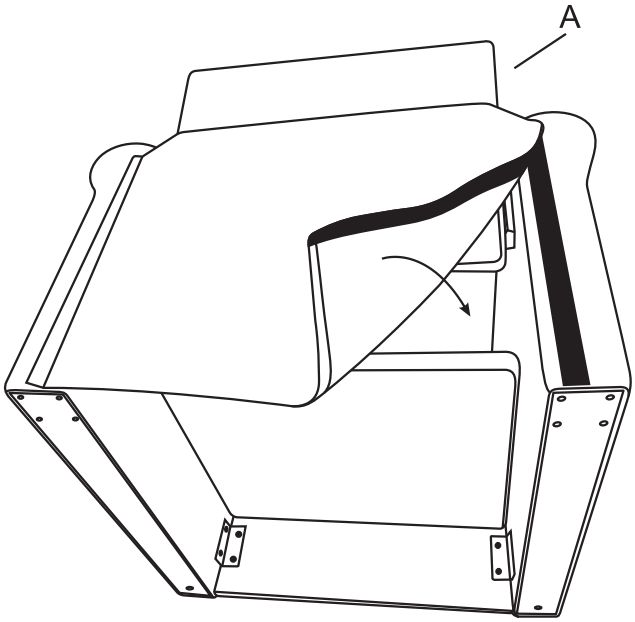

9

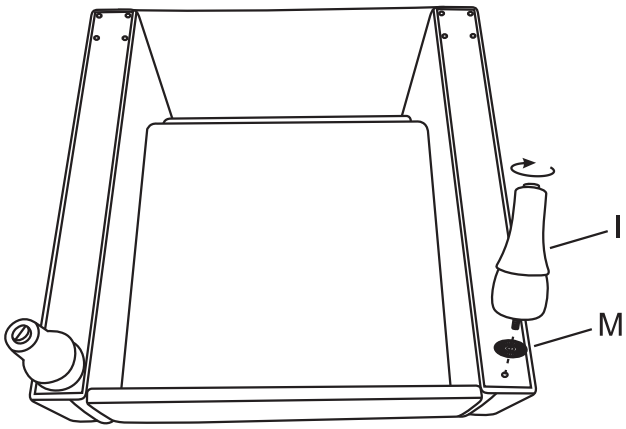

10

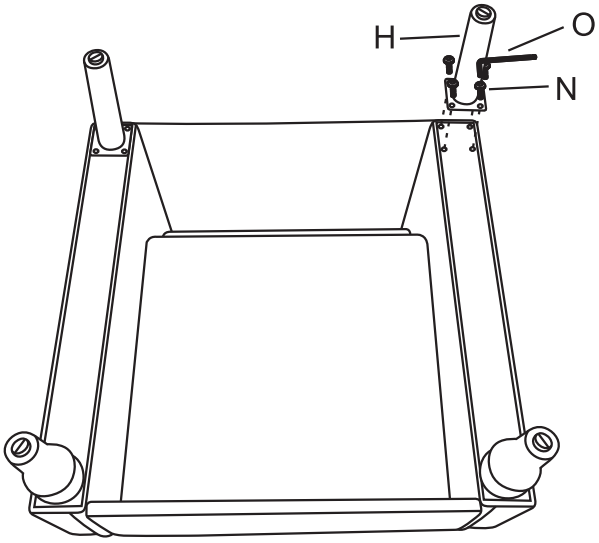

11

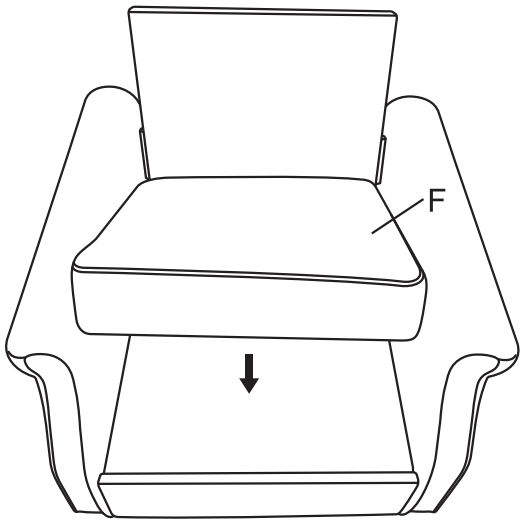

12

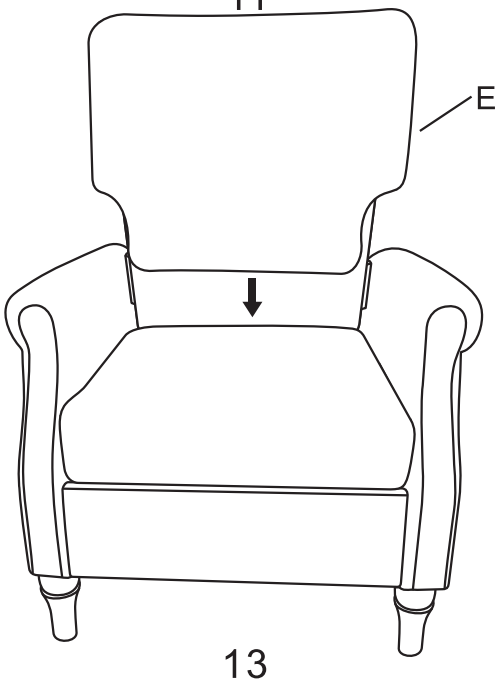

13

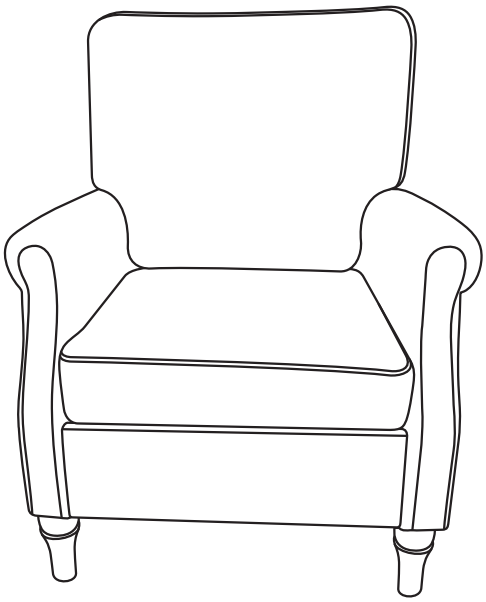

14