Instruction

TVS-WAV-905-WAL

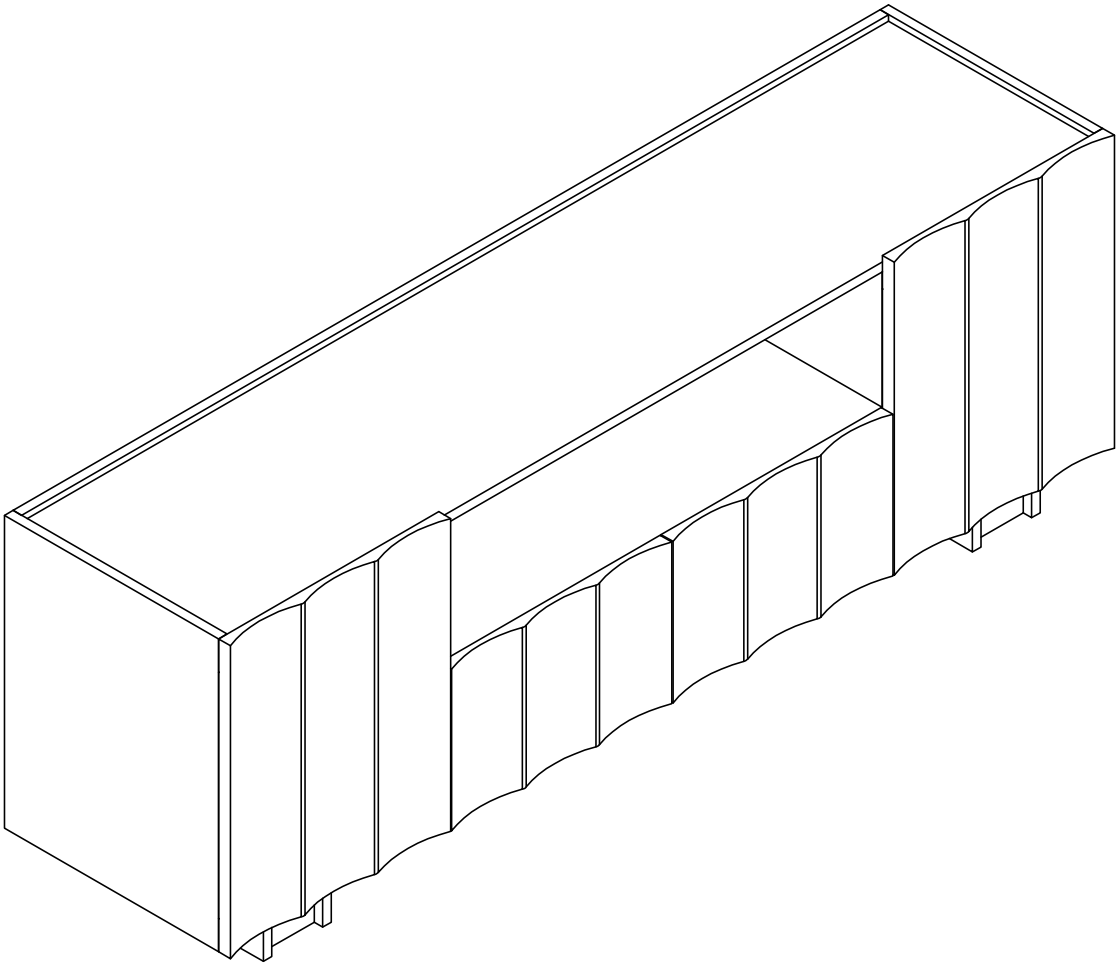

THIS INSTRUCTION BOOKLET CONTAINS IMPORTANT SAFETY INFORMATION. PLEASE READ AND KEEP FOR FUTURE REFERENCE.

Do Not Return This Product!

Contact our customer service team for help first.

WARNING

- Unit can tip over causing severe injury or death.
- Anchor unit to stud in wall (if instructed to)
- Do Not allow children to climb on unit.
- Put heavy items on lower shelves or drawers.

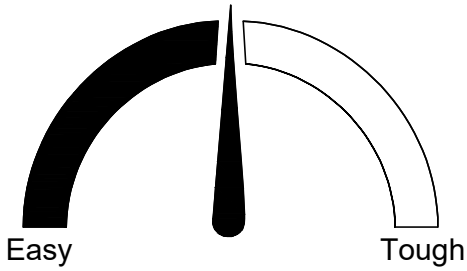

Assembly Diffculty Meter

WARNING

Do NOT return this product!

Contact our friendly customer service team frst for help.

fujiwahservice@outlook.com

HELPFUL HINTS

PEOPLE NEEDED FOR ASSEMBLY:2
ESTIMATED ASSEMBLY TIME:1HOUR

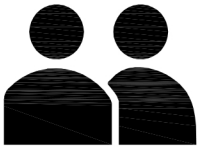

Watch Assembly Video

On YouTube

-Open your item in the area you plan to keep it to avoid excessive heavy lifting.

-Identify,sort and count the parts before attempting assembly.

-Back panel must be used to make sure your unit is sturdy.

-Do NOT use harsh chemicals or abrasive cleaners on this item.

-Never push,pull,or drag your furniture.







BEFORE YOU START

- ☑ Read through each step carefully and follow the proper order
- ☑ Separate and count all your parts and hardware
- ☑ Give yourself enough room for the assembly process
- ☑ Caution: IF using a power drill or power screwdriver for screwing,please be aware to slow down and stop when screw is tight.Failure to do so may result in stripping the screw.

FAQ

Q: What if parts are missing or damaged?

A: If a part is lost or damaged, identify the part number according to the instructions and provide photos of the damage, we will resend you the appropriate part.

Q: What if I have trouble with the installation?

A: The product comes with instructions and an installation video, so if you still have questions, we can help further

Q: What if the product arrives damaged?

A: If a product is lost or damaged, please provide photos of the damage, we will provide you with a perfect after-sales protection, so that you can rest assured!

Q: What is the return policy?

A:Returns accepted within Amazon's 30-day window, Reach out with images/videos for speedy processing, Be cautious of potential fees for returns lacking seller or Amazon labels, Further clarifcations can be requested.

CUSTOMER SUPPORT

Returns accepted within Amazon's 30-day window. Reach out with images/videos for speedy processing.
If you have any questions about the product or require after-sales support, please feel free to contact Amazon customer service or reach us via:

fujiwahservice@outlook.com

BOARD IDENTIFICATION

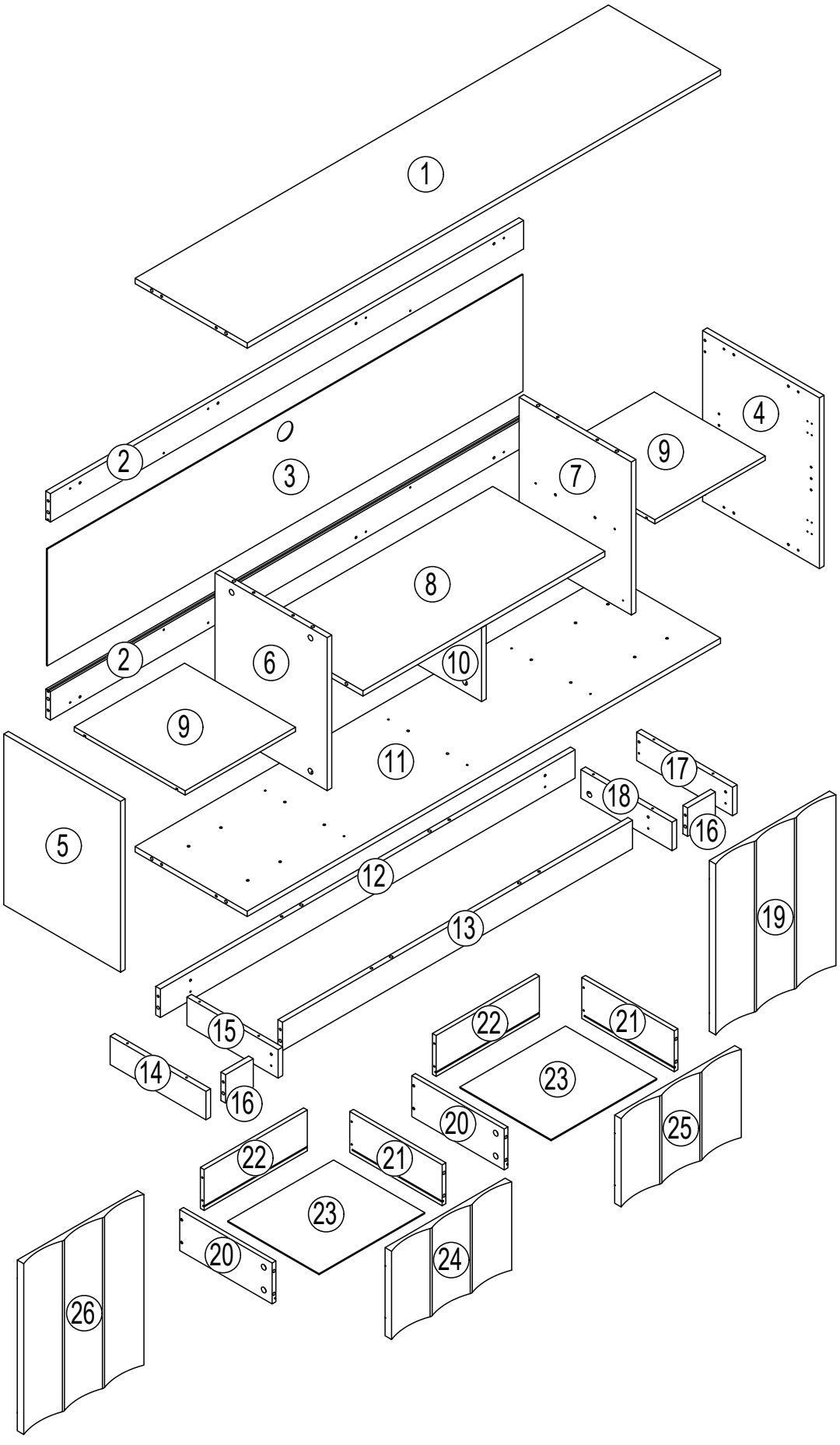

BOARD IDENTIFICATION

① 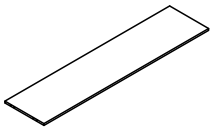 × 1	②  × 2	③ 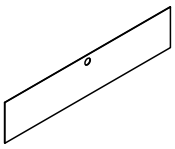 × 1	④ 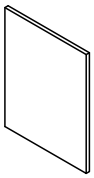 × 1
⑤ 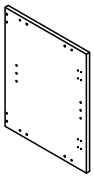 × 1	⑥ 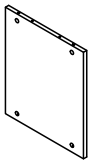 × 1	⑦ 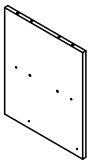 × 1	⑧ 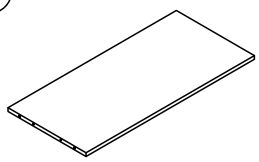 × 1
⑨ 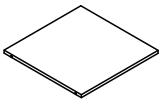 × 2	⑩ 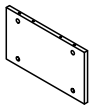 × 1	⑪ 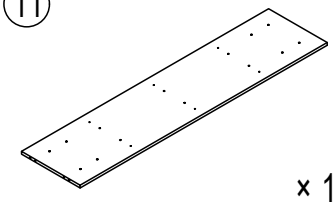 × 1	⑫ 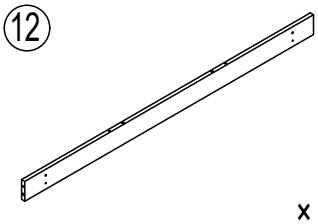 × 1
⑬ 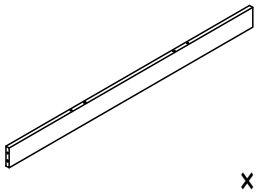 × 1	⑭ 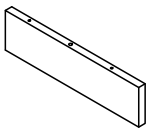 × 1	⑮ 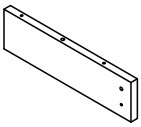 × 1	⑯  × 2
⑰ 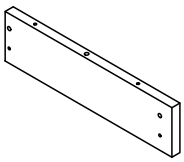 × 1	⑱ 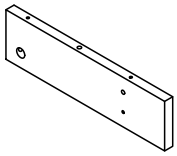 × 1	⑲ 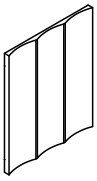 × 1	⑳ 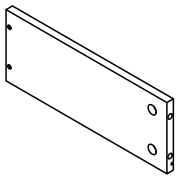 × 2
㉑ 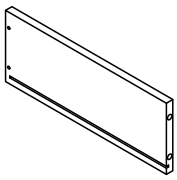 × 2	㉒ 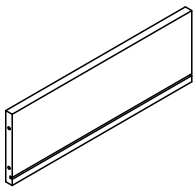 × 2	㉓ 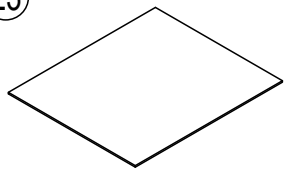 × 2	㉔ 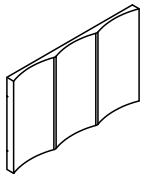 × 1
㉕ 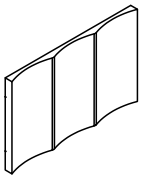 × 1	㉖ 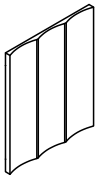 × 1		

THE HARDWARES

A M6×35	B Ø15×9	C M6×30	D M5×40
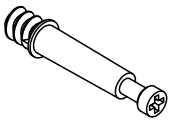		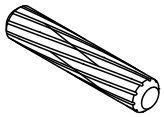	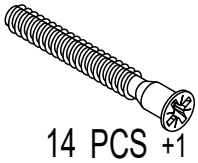
56 PCS +3	56 PCS +3	54 PCS +2	14 PCS +1

E M3.5*12	F 30*15	G	H
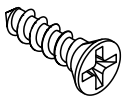		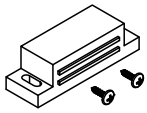	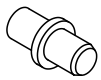
24 PCS +2	8 PCS	2 PCS	8 PCS

I	J M4×14	K	L M4*35
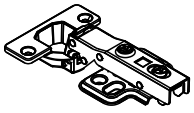	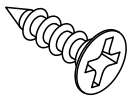	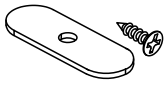	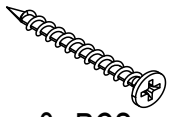
4 PCS	24 PCS +2	2 PCS	8 PCS

M	N Ø21	CL	CR
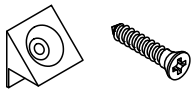			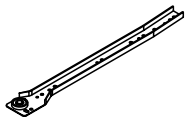
8 PCS	60 PCS	2 PCS	2 PCS

DL	DR	
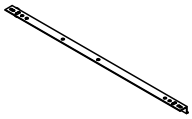		
2 PCS	2 PCS	1 PC

CAM LOCK FASTENING SYSTEM

This Cam Lock Fastening System will be used throughout the assembly process.

1

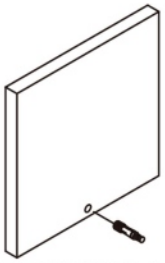

Press CAM BOLT into hole.

2

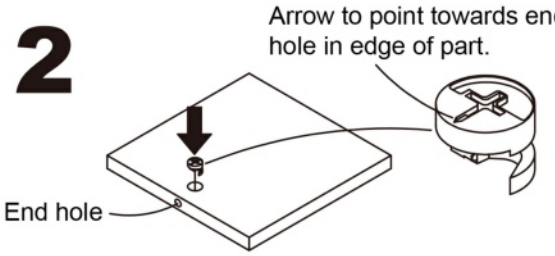

Press CAM LOCK into hole.

3

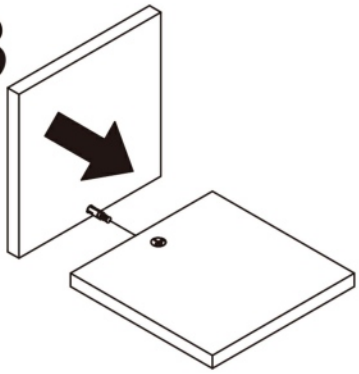

Press parts together so CAM BOLT inserts into edge hole.

4

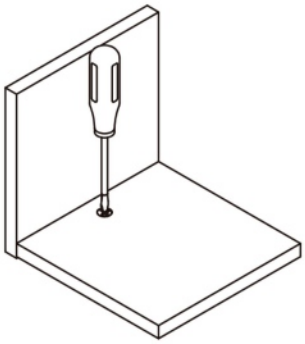

Using a screwdriver, turn the CAM LOCK clockwise to lock the CAM LOCK and CAM BOLT into their holes and fastening parts together.

M5×42

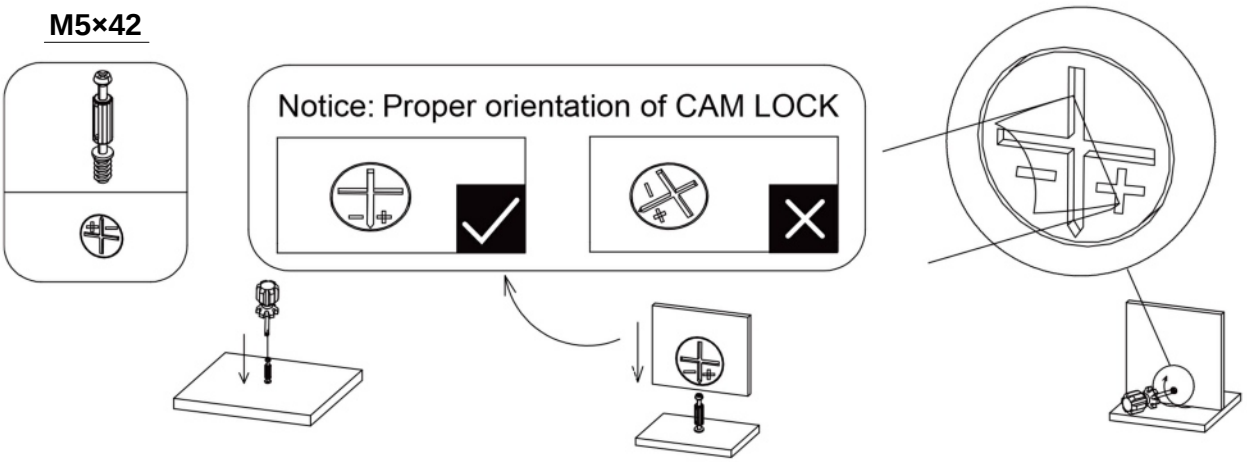

BOARD IDENTIFICATION

STEP 1

A	6 PCS
B	6 PCS
C	6 PCS

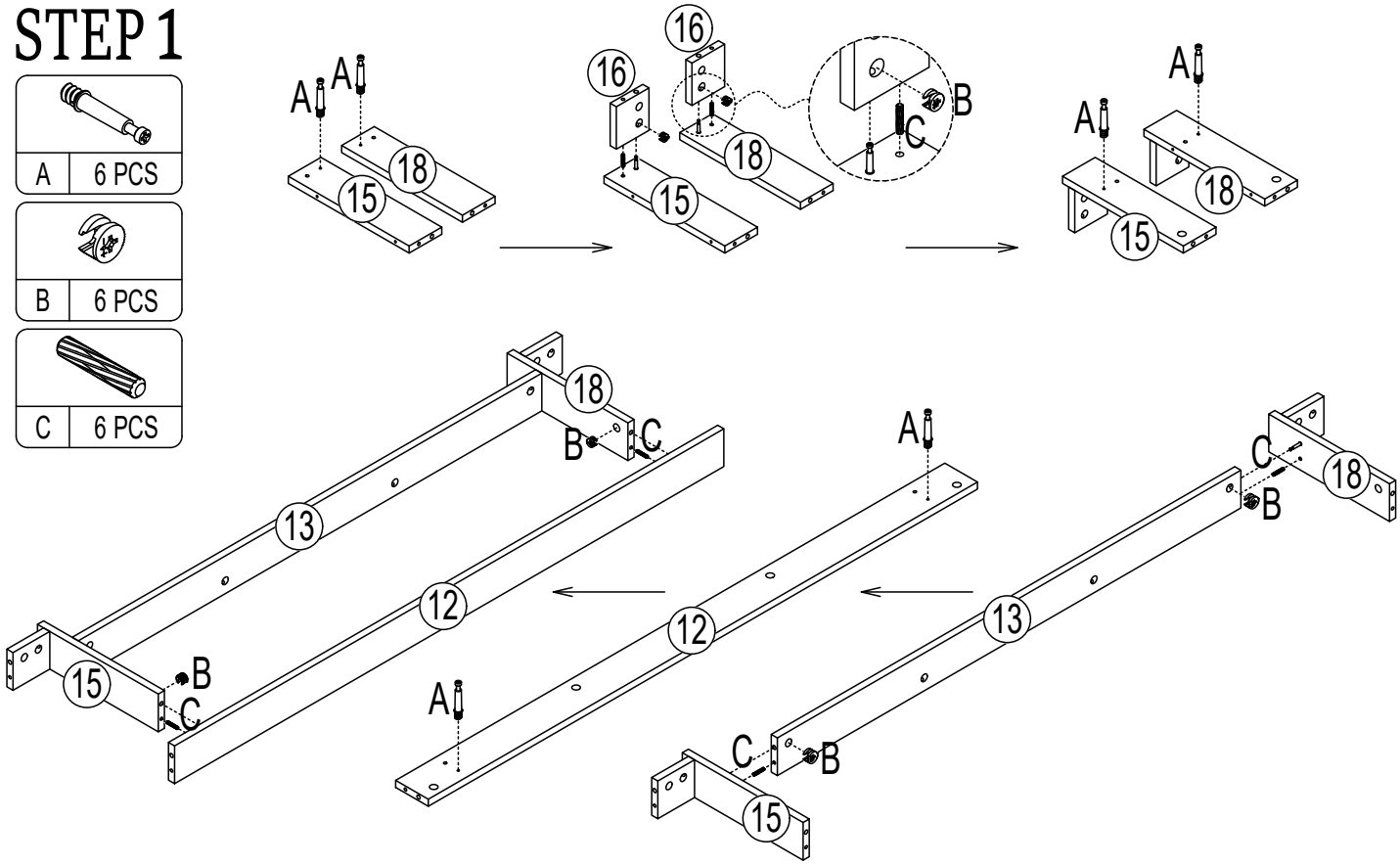

STEP 2

A	4 PCS
B	4 PCS
C	4 PCS
F	8 PCS

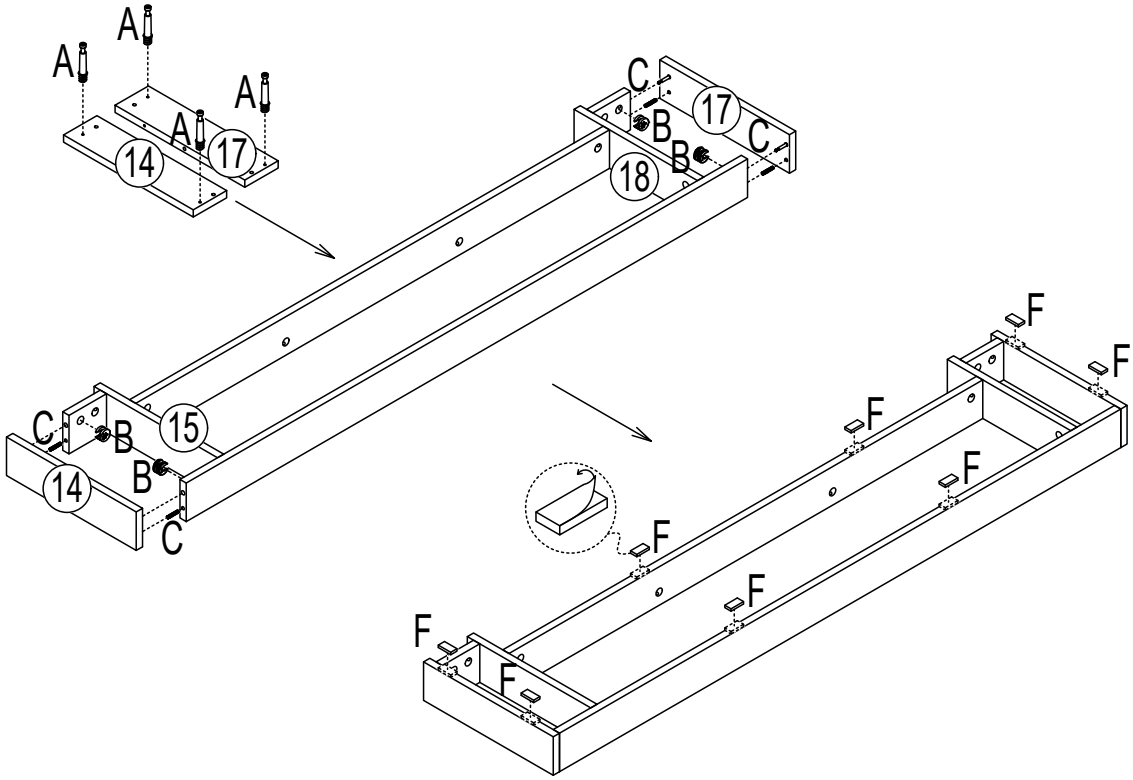

BOARD IDENTIFICATION

STEP 3

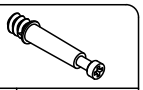	A 20PCS
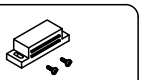	G 2 PCS

STEP 4

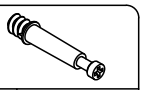	A 2 PCS
	B 2 PCS
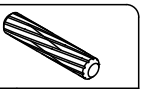	C 2 PCS
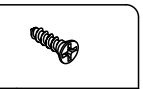	E 6 PCS
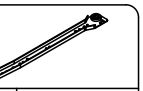	CL 1 PCS
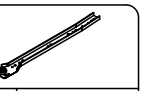	CR 1 PCS

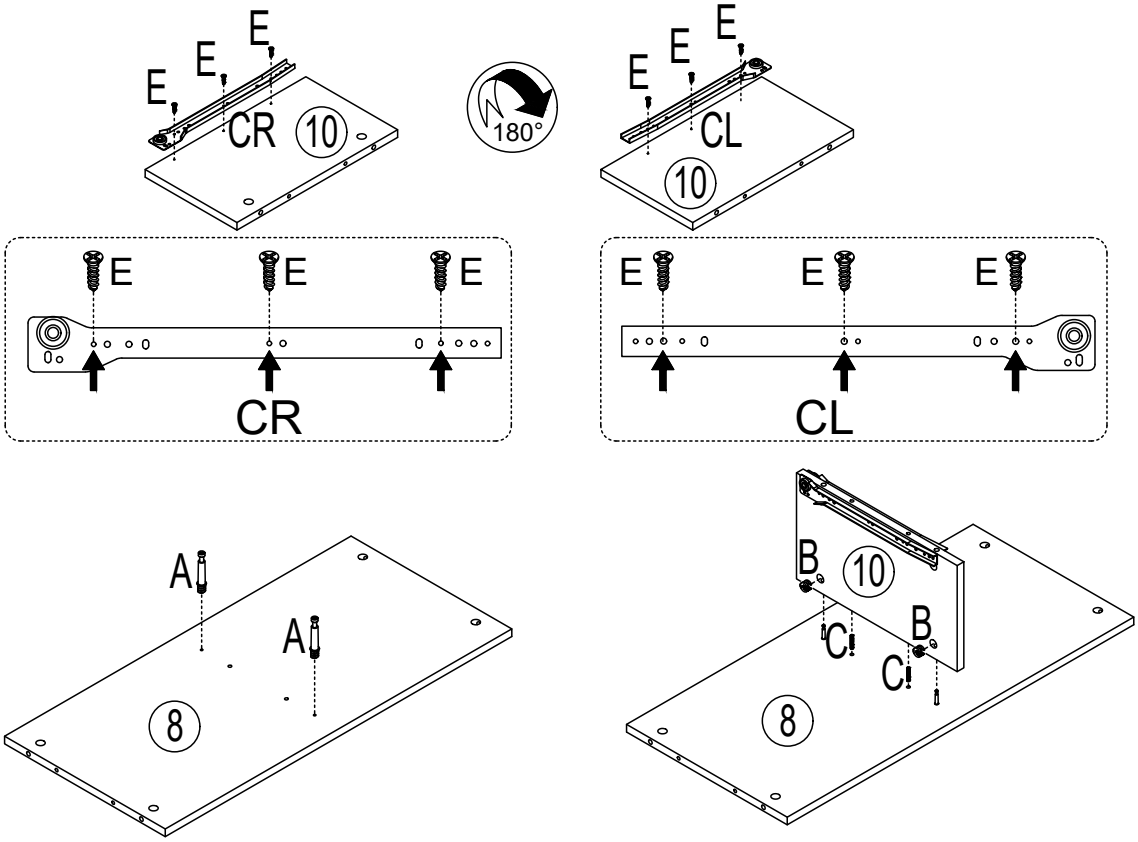

BOARD IDENTIFICATION

STEP 5

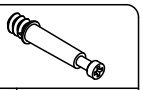	
A	4 PCS
	
B	4 PCS
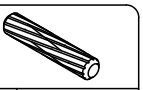	
C	4 PCS
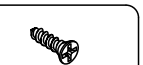	
E	6 PCS
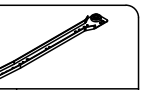	
CL	1 PC
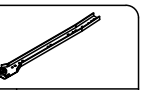	
CR	1 PCS

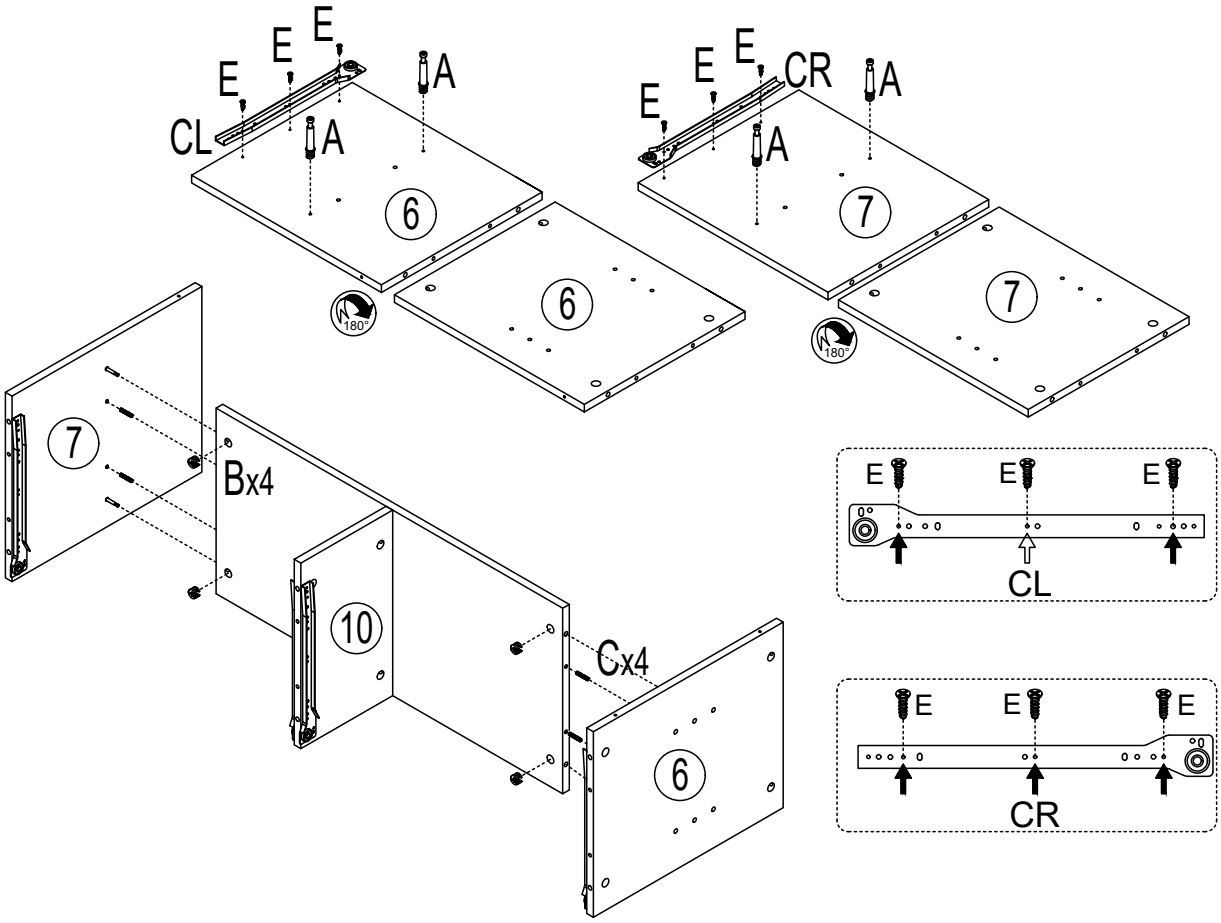

STEP 6

	
B	4 PCS
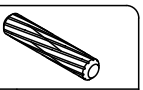	
C	6 PCS
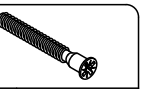	
D	2 PCS

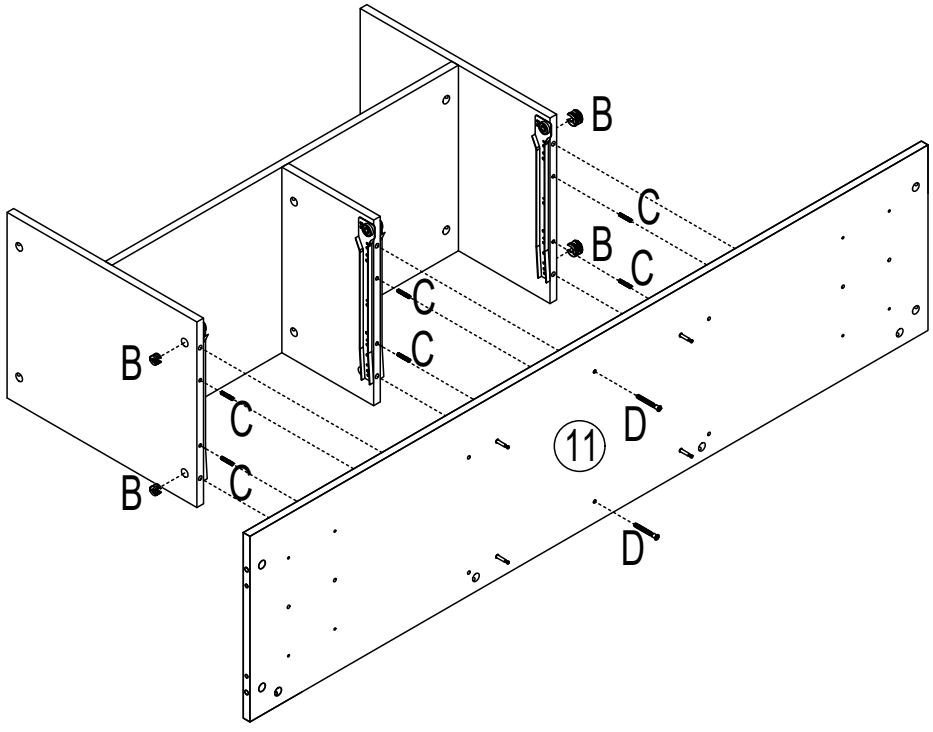

BOARD IDENTIFICATION

STEP 7

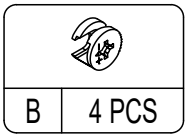

B	4 PCS

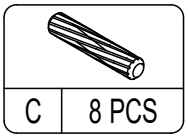

C	8 PCS

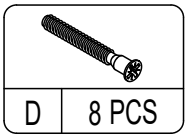

D	8 PCS

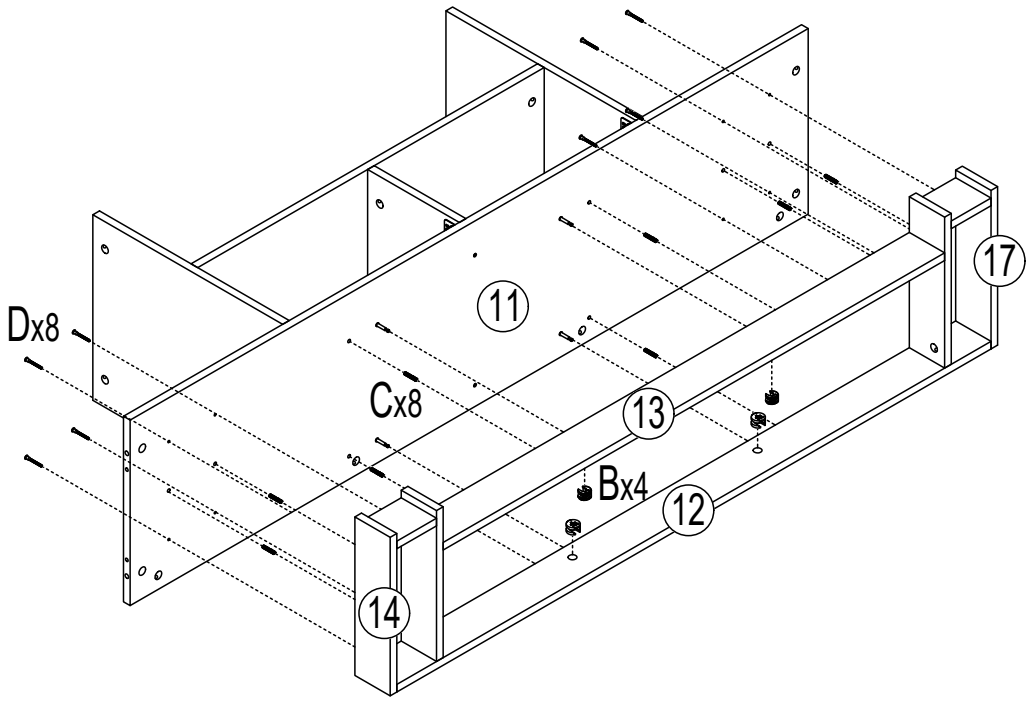

STEP 8

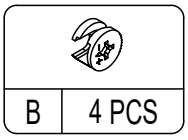

B	4 PCS

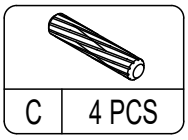

C	4 PCS

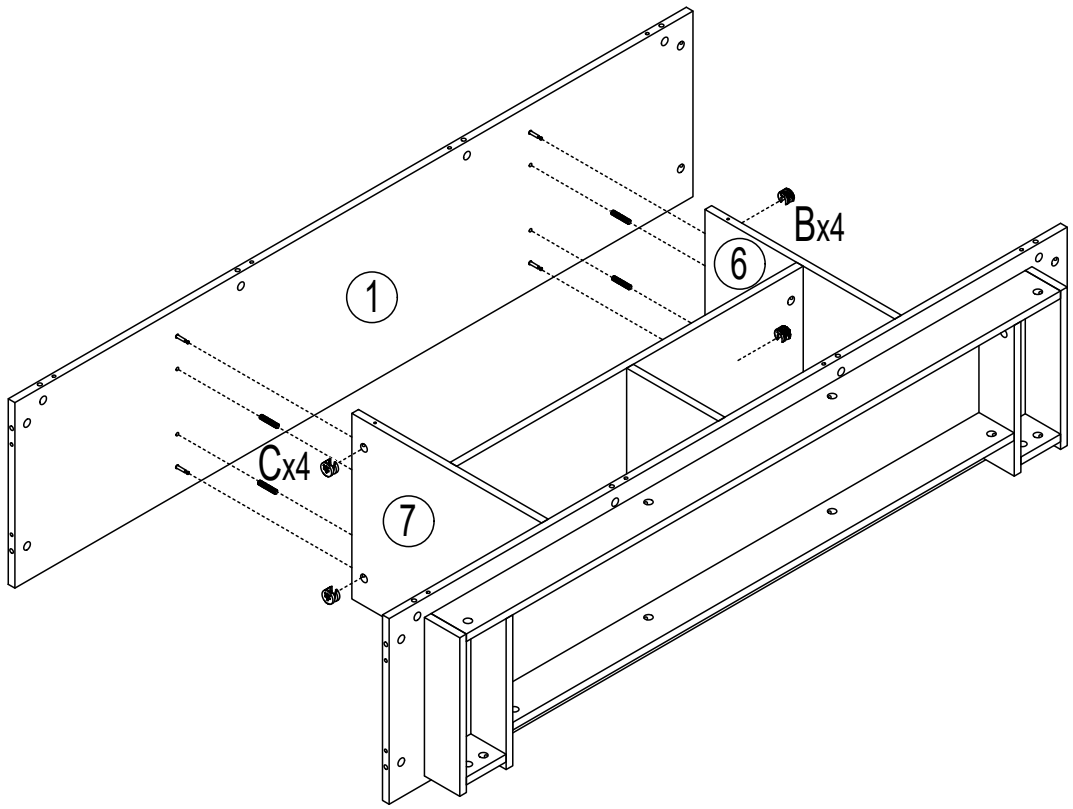

BOARD IDENTIFICATION

STEP 9

	
B	8 PCS
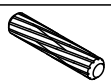	
C	8 PCS
	
D	4 PCS

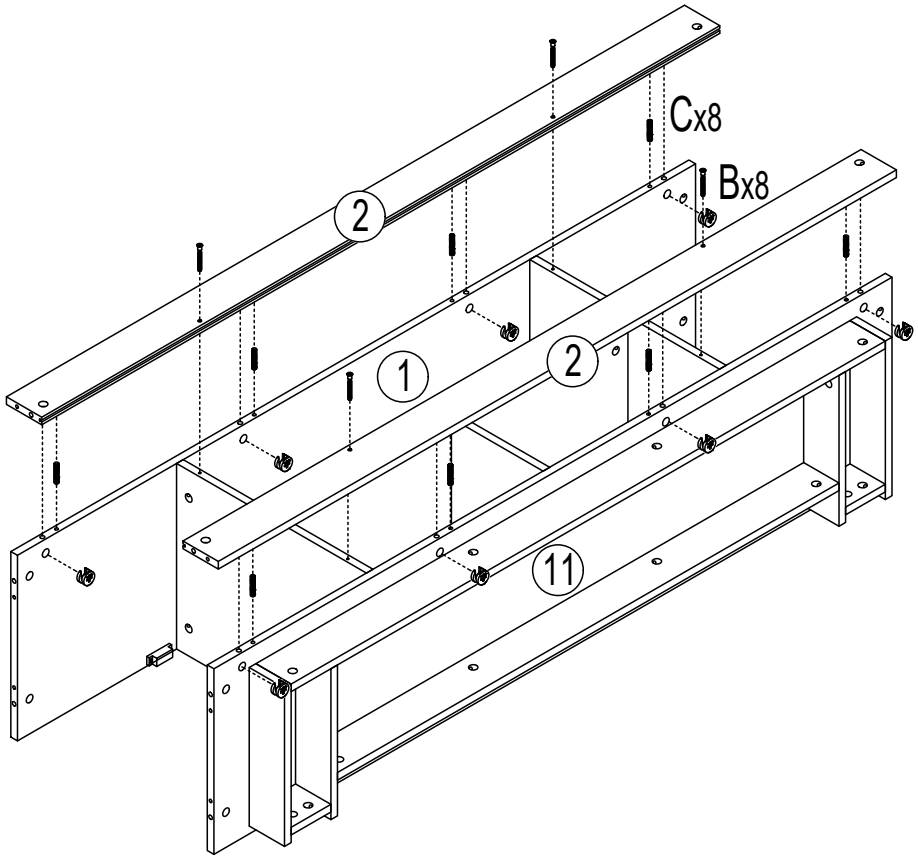

STEP 10

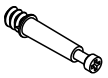	
A	6 PCS
	
B	6 PCS
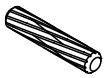	
C	6 PCS

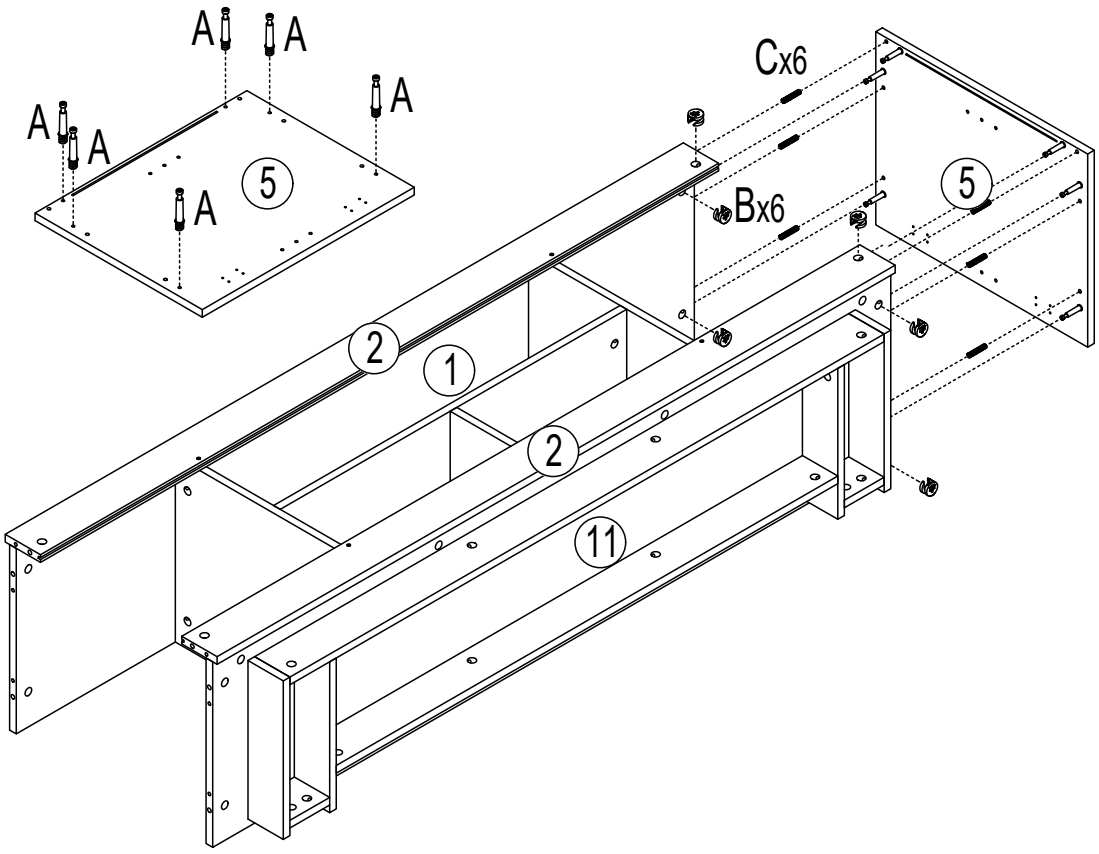

BOARD IDENTIFICATION

STEP 11

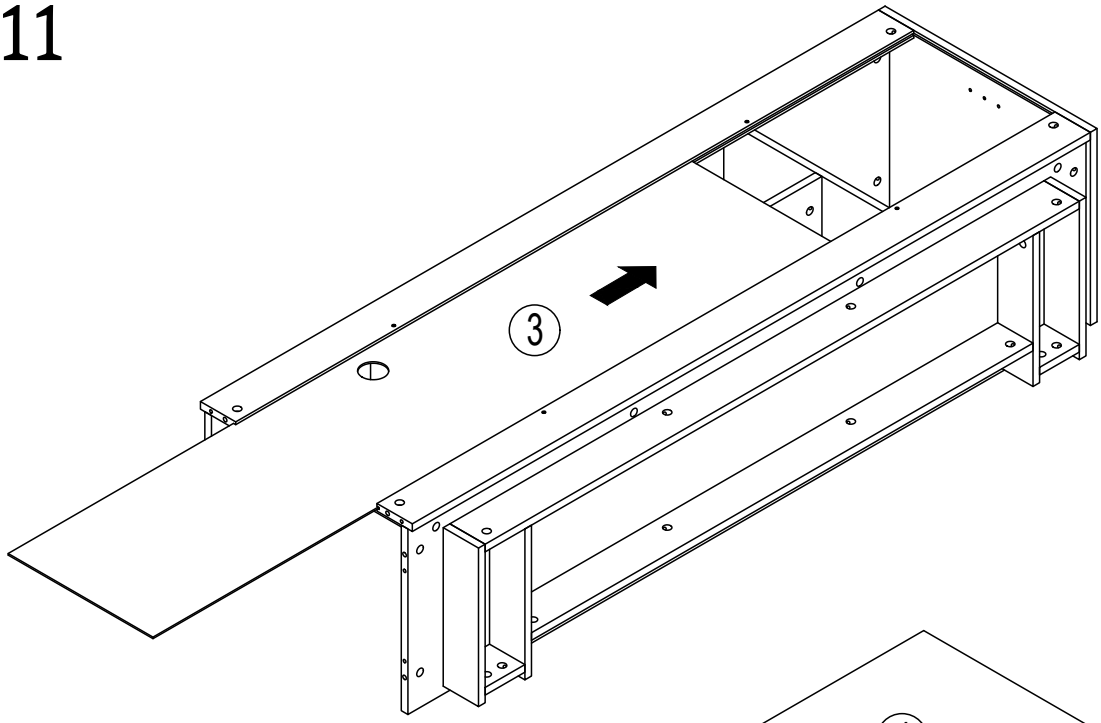

STEP 12

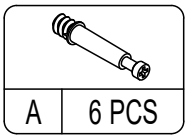

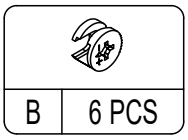

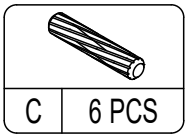

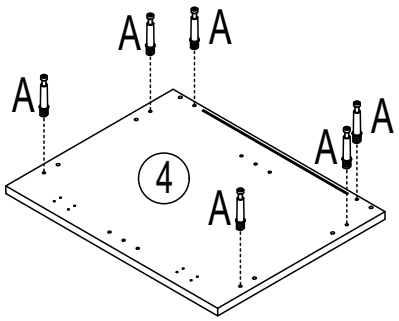

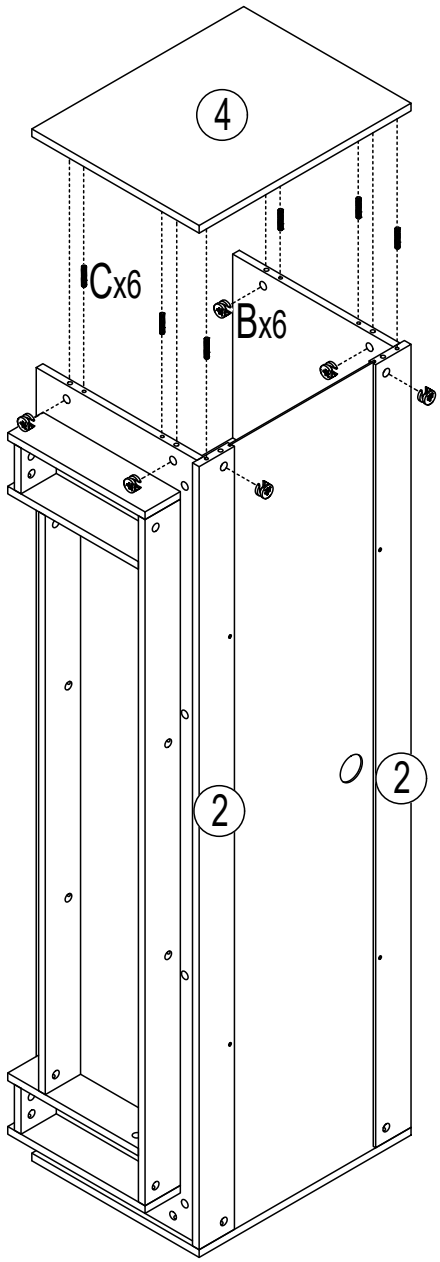

BOARD IDENTIFICATION

STEP 13

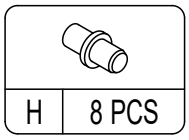

H	8 PCS

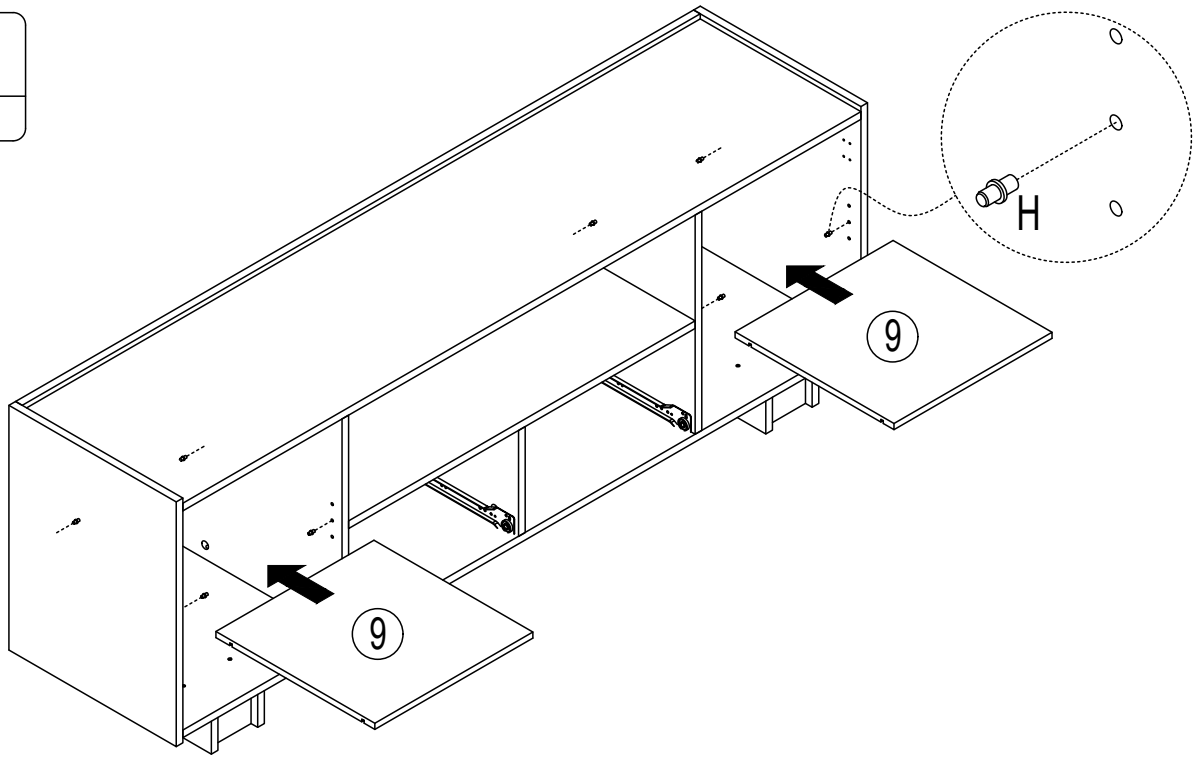

STEP 14

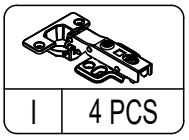

I	4 PCS

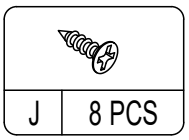

J	8 PCS

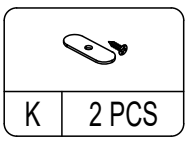

K	2 PCS

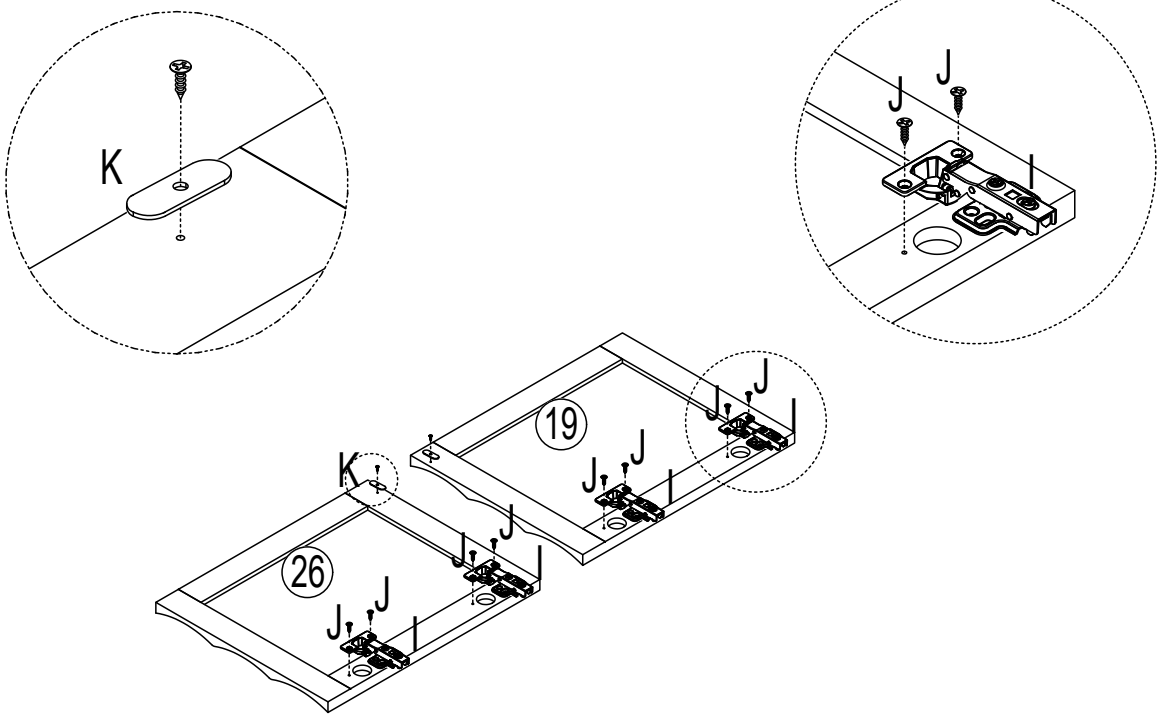

BOARD IDENTIFICATION

STEP 15

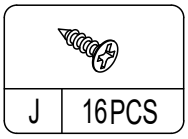

J	16PCS

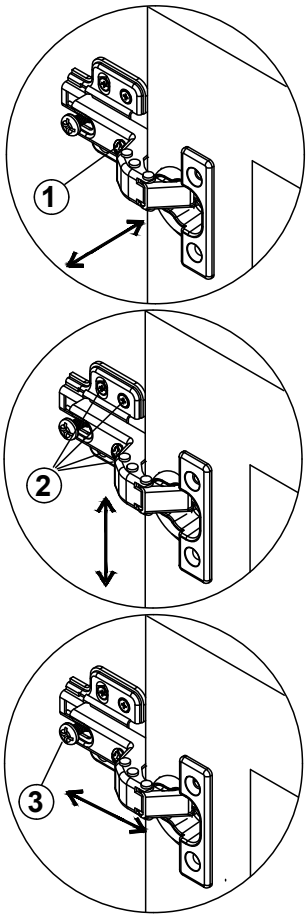

STEP 16

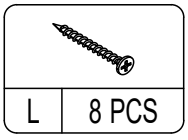

L	8 PCS

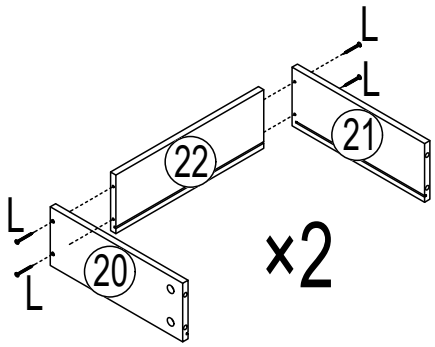

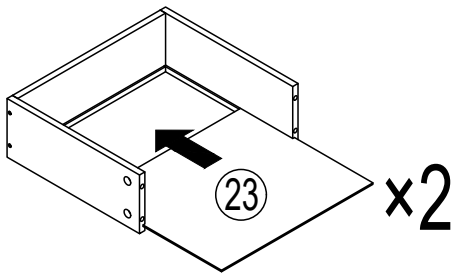

BOARD IDENTIFICATION

STEP 17

B	8 PCS
A	8 PCS

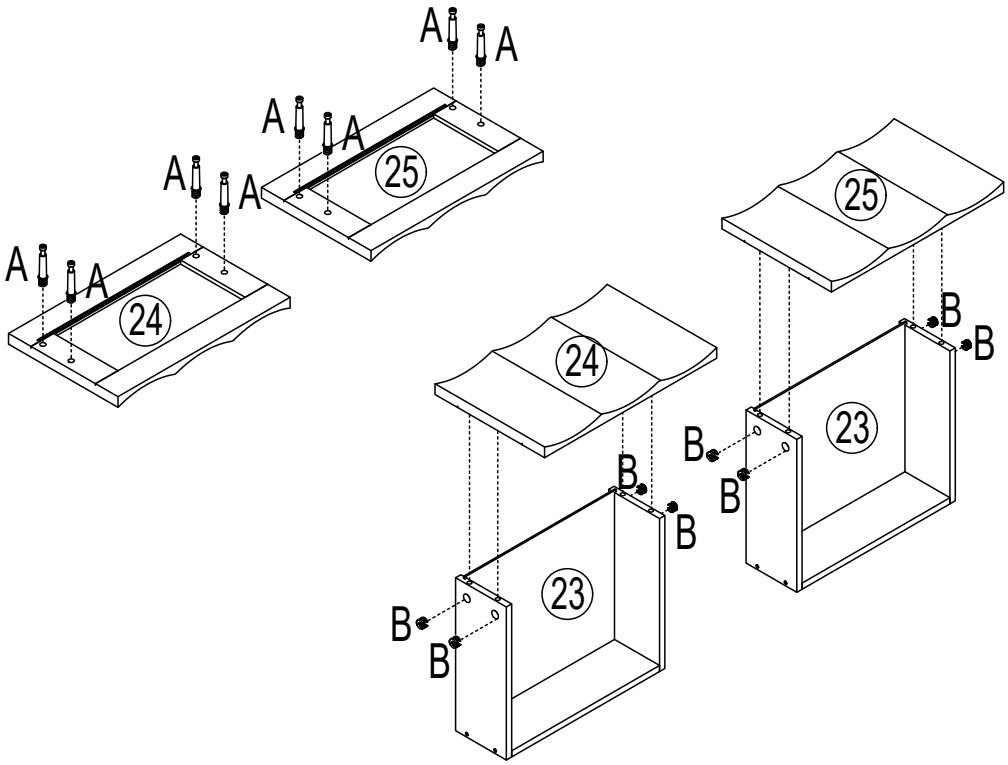

STEP 18

E	12PCS
DL	2 PCS
DR	2 PCS

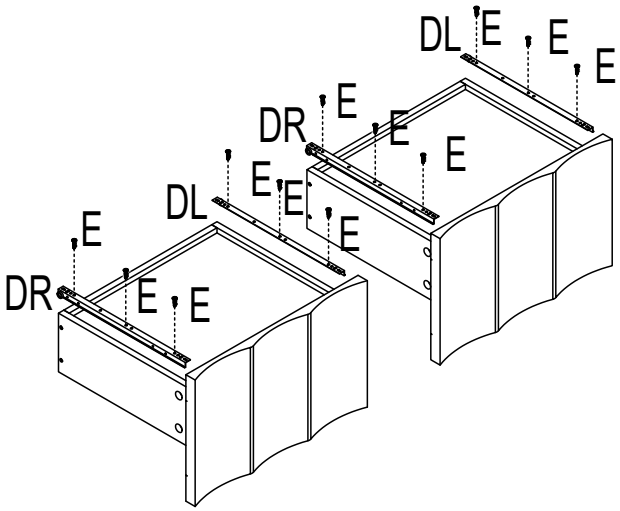

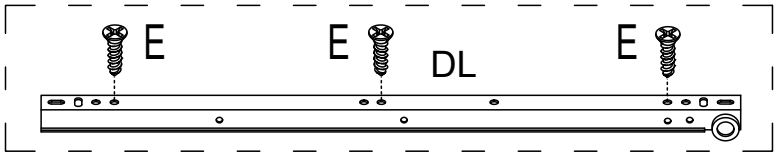

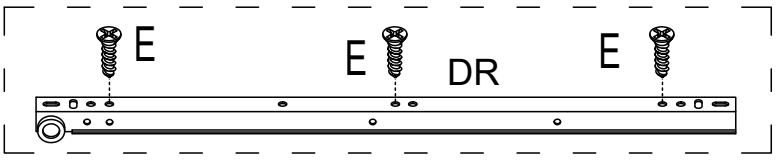

BOARD IDENTIFICATION

STEP 19

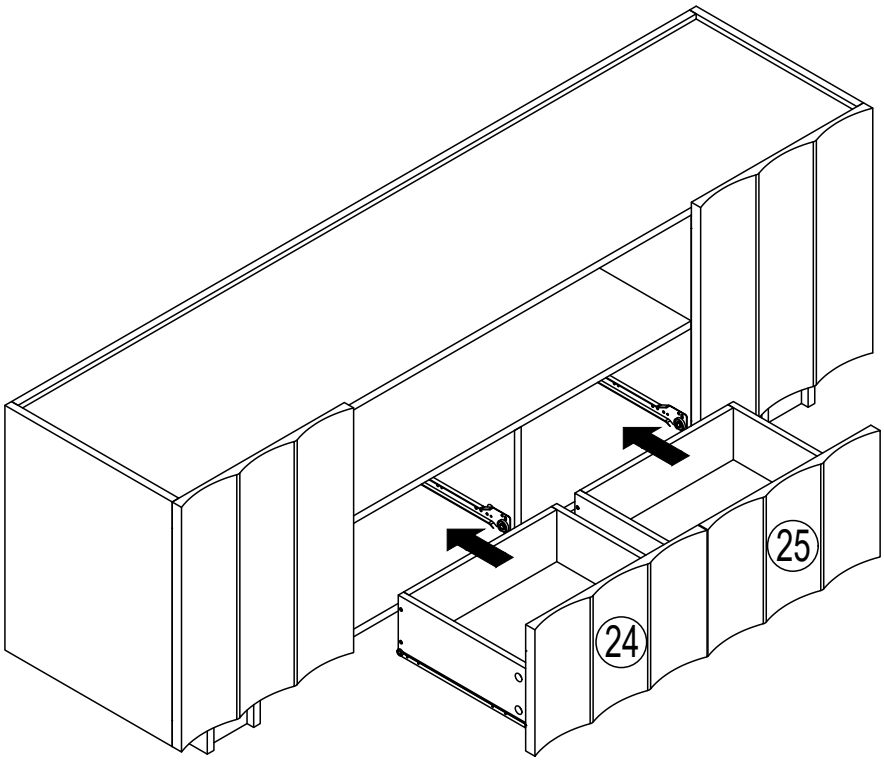

STEP 20

M	8 PCS
N	60PCS

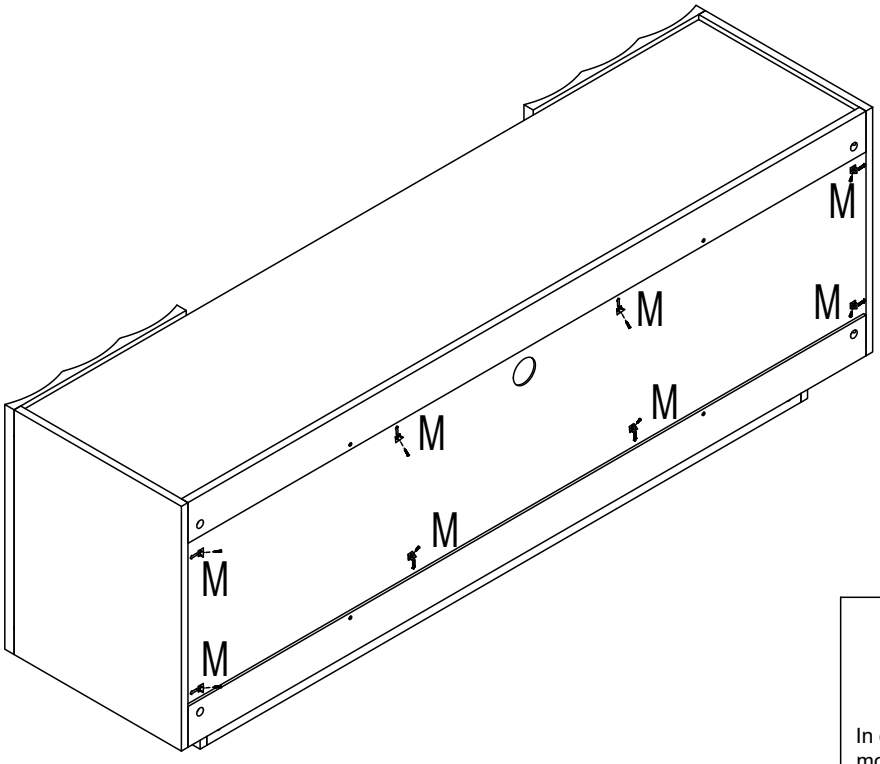

N

In order to make the product more beautiful
Please paste hard ware N on the exposed holes