GLOBAL PROCUREMENT AND MARKETING LIMITED

Florida Bed

Assembly Instructions – Please keep for future reference	BEDFLO4WT	BEDFLO4GY

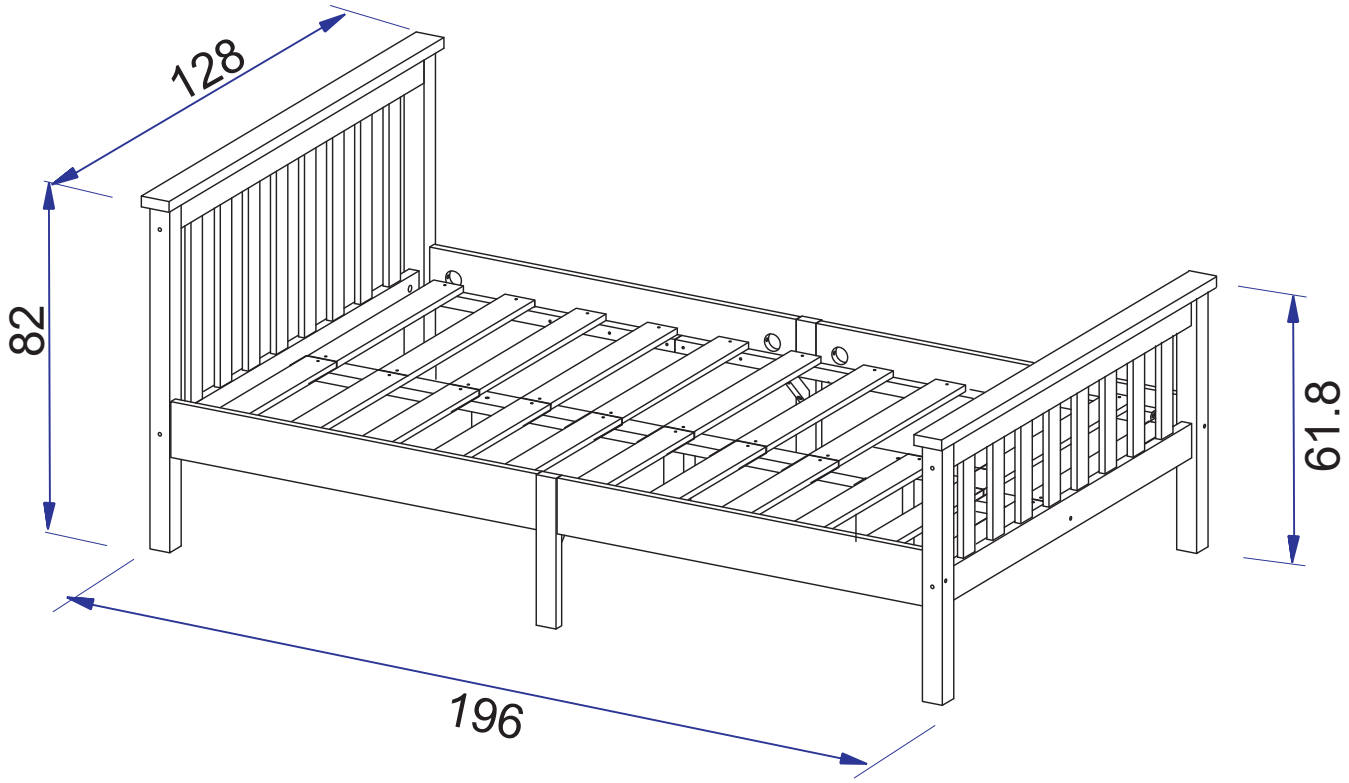

Dimensions	No. people	Assembly Time	SKU #
Width: 196 cm Depth: 128 cm Height: 82 cm		50 mins (approx.)	BEDFLO4WT BEDFLO4GY

thank you

For purchasing this **GPM Limited** product

Important

- PLEASE READ THESE INSTRUCTIONS FULLY BEFORE STARTING ASSEMBLY
- PLEASE DO NOT THROW THE PACKAGING AWAY UNTIL YOU ARE SATISFIED WITH PURCHASE, GOODS NEED TO BE RETURNED IN ORIGINAL PACKAGING.

If you need help or have damaged or missing parts, please email **aftersales@gpmfurniture.co.uk**

⚠ Safety and Care Advice

Important

- PLEASE READ THESE INSTRUCTIONS FULLY BEFORE STARTING ASSEMBLY
- PLEASE DO NOT THROW THE PACKAGING AWAY UNTIL YOU ARE SATISFIED WITH PURCHASE, GOODS NEED TO BE RETURNED IN ORIGINAL PACKAGING.

- Check you have all the components and tools listed on pages 4 and 5.
- Remove all fittings from the plastic bags and separate them into their groups.
- Keep children and animals away from the work area, small parts could choke if swallowed.
- Make sure you have enough space to lay out the parts before starting.
- Do not stand or put weight on the product, this could cause damage.
- Assemble the item as close to its final position (in the same room) as possible.
- Assemble on a soft, level surface to avoid damaging the unit or your floor.
- We do not recommend the use of power drill/drivers for inserting screws, as this could damage the unit. Only use hand screwdrivers.

- Dispose of all packaging carefully and responsibly.

Care and Maintenance

- Only clean using a damp cloth and mild detergent, do not use bleach or abrasive cleaners.
- From time to time check that there are no loose screws on this unit.
- This product should not be discarded with household waste. Take to your local authority waste disposal centre.

If kept outside please ensure in the winter months that the product is correctly covered or put away into a dry environment to prevent corrosion, weathering or damage.

If your product is not designed to be outside, we recommend that it is always kept indoors in a dry environment.

Components - Panels

Please check that you have all the components listed below before constructing your item.

Part No	Description	Qty	Size (mm)	Thickness (mm)
1	HIGH LEG	1	800x40	30
2	HIGH LEG	1	800x40	30
3	SHORT LEG	1	600x40	30
4	SHORT LEG	1	600x40	30
5	HEADBOARD VERTICAL BAR	8	450x45	15
6	FOOTBOARD	2	1180x45	18
7	HEADBOARD	2	1180x45	18
8	BEDSIDE CENTRAL LEG	2	340x60	20
9	BEDSIDE	4	920x90	18
10	BEDSIDE STRIP	6	630x25	20
11	SLATS	26	600x60	13
12	SUPPORT	2	160x45	18
13	HEADBOARD STRIP	2	1280x45	18
14	FOOTBOARD VERTICAL BAR	8	250x45	15

Components - Panels

Please check that you have all the components listed below before constructing your item.

Part No	Description	Qty	Size (mm)	Thickness (mm)
15	BED SUPPORT	2	955x80	18
16	CENTRAL LEG	2	275x40	40
17	CENTRAL LEG	1	275x40	40

Exploded View

If you have damaged or missing components, email: **aftersales@gpmfurniture.co.uk**

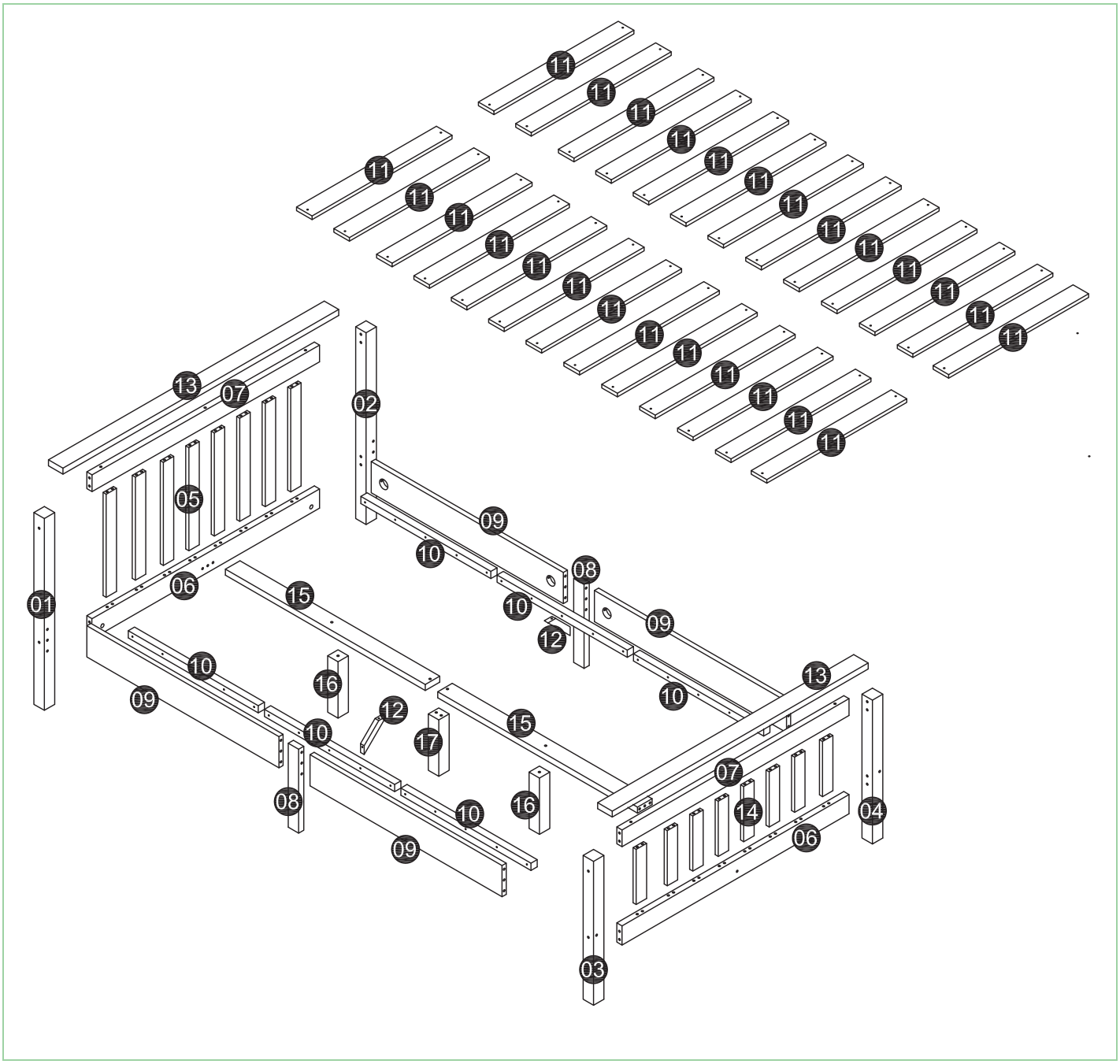

Important – Please read these instructions fully before starting assembly

If you need help or have damaged or missing parts, please email **aftersales@gpmfurniture.co.uk**

Components - Fixings

If you have damaged or missing components,
email: **aftersales@gpmfurniture.co.uk**

Please check that you have all the components listed below before constructing your item.

Note: The quantities below are the correct amount to complete the assembly. In some cases more fittings may be supplied than are required.

(A)	Wooden dowel x92 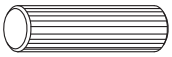 ∅8 x30mm	**(B)**	Screw x86 ∅4 x30mm	**(C)**	Screw x4 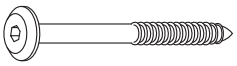 M6 x90mm	**(D)**	Screw x6 M6 x55mm
(E)	Bolt x8 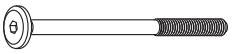 M6 x80mm	**(F)**	Nut x 4	**(G)**	Allen key x1 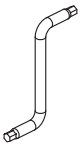	**(H)**	Bolt bar x2 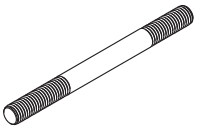
(I)	Nut x8 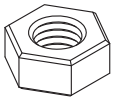	**(J)**	Half moon washer x8 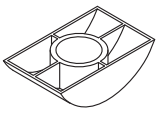	**(K)**	Spanner x1 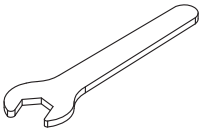	**(L)**	Washer x8 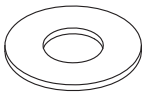
(M)	Screw x6						

Tools Required

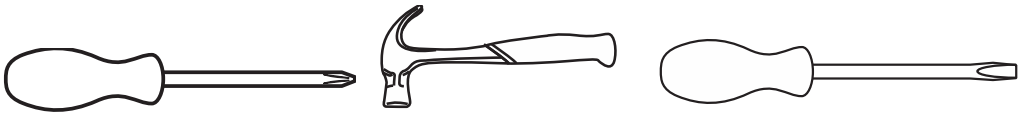

Ruler – Use this to measure your screws (mm)

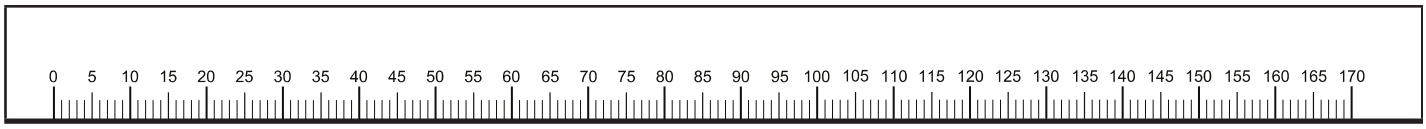

Important – Please read these instructions fully before starting assembly

If you need help or have damaged or missing parts, please email **aftersales@gpmfurniture.co.uk**

Assembly Instructions

If you have damaged or missing components,
email: **aftersales@gpmfurniture.co.uk**

01

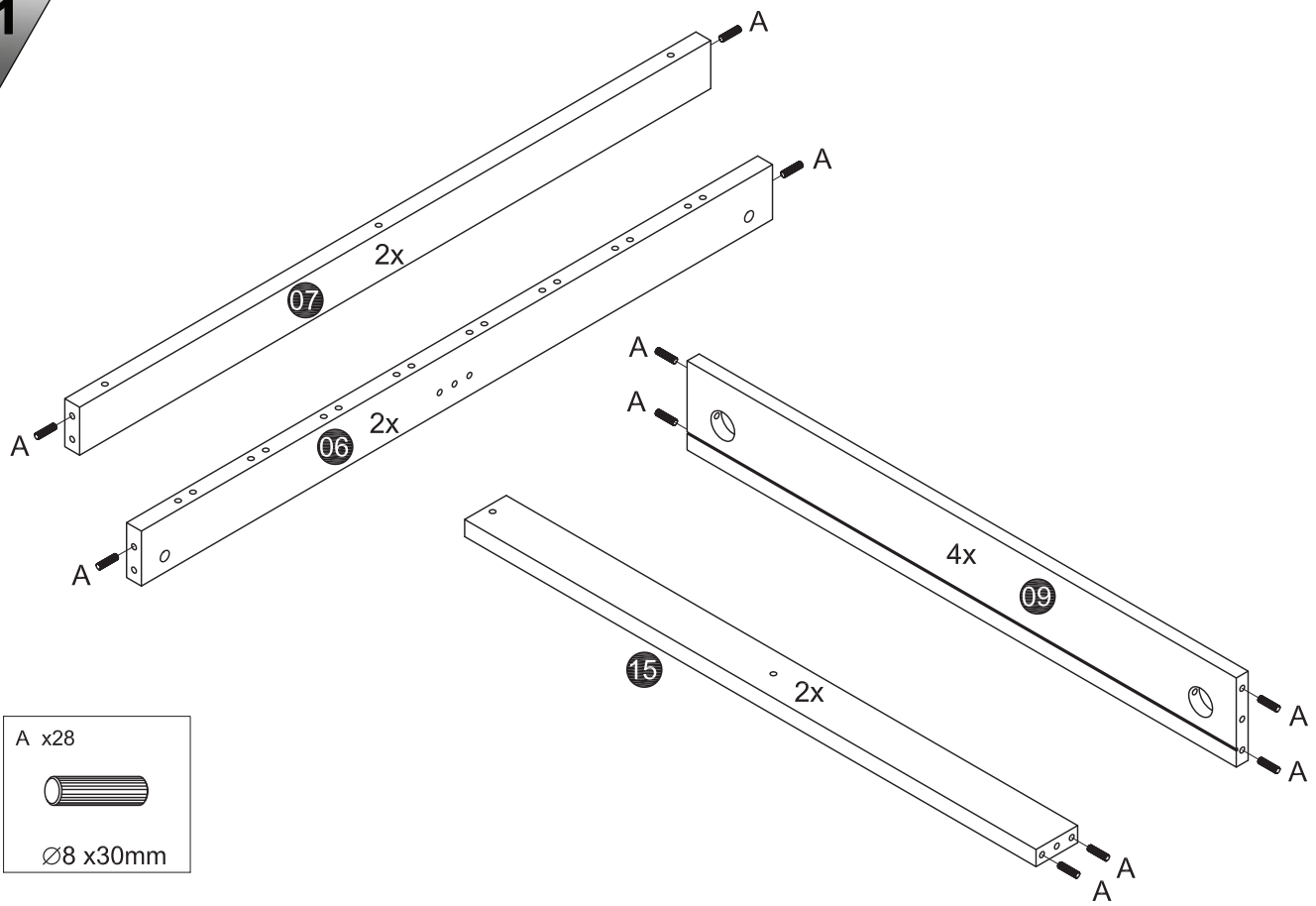

02

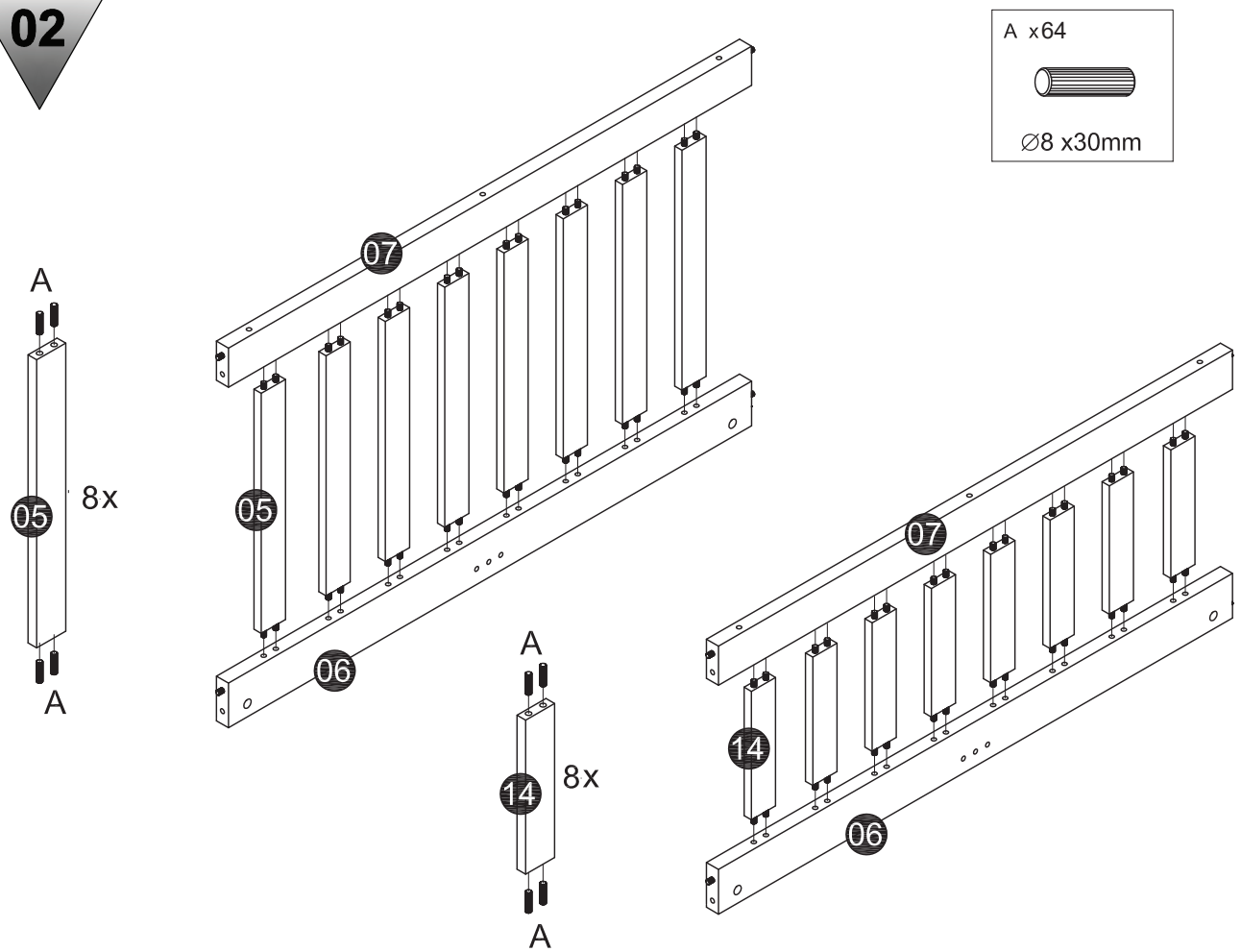

03

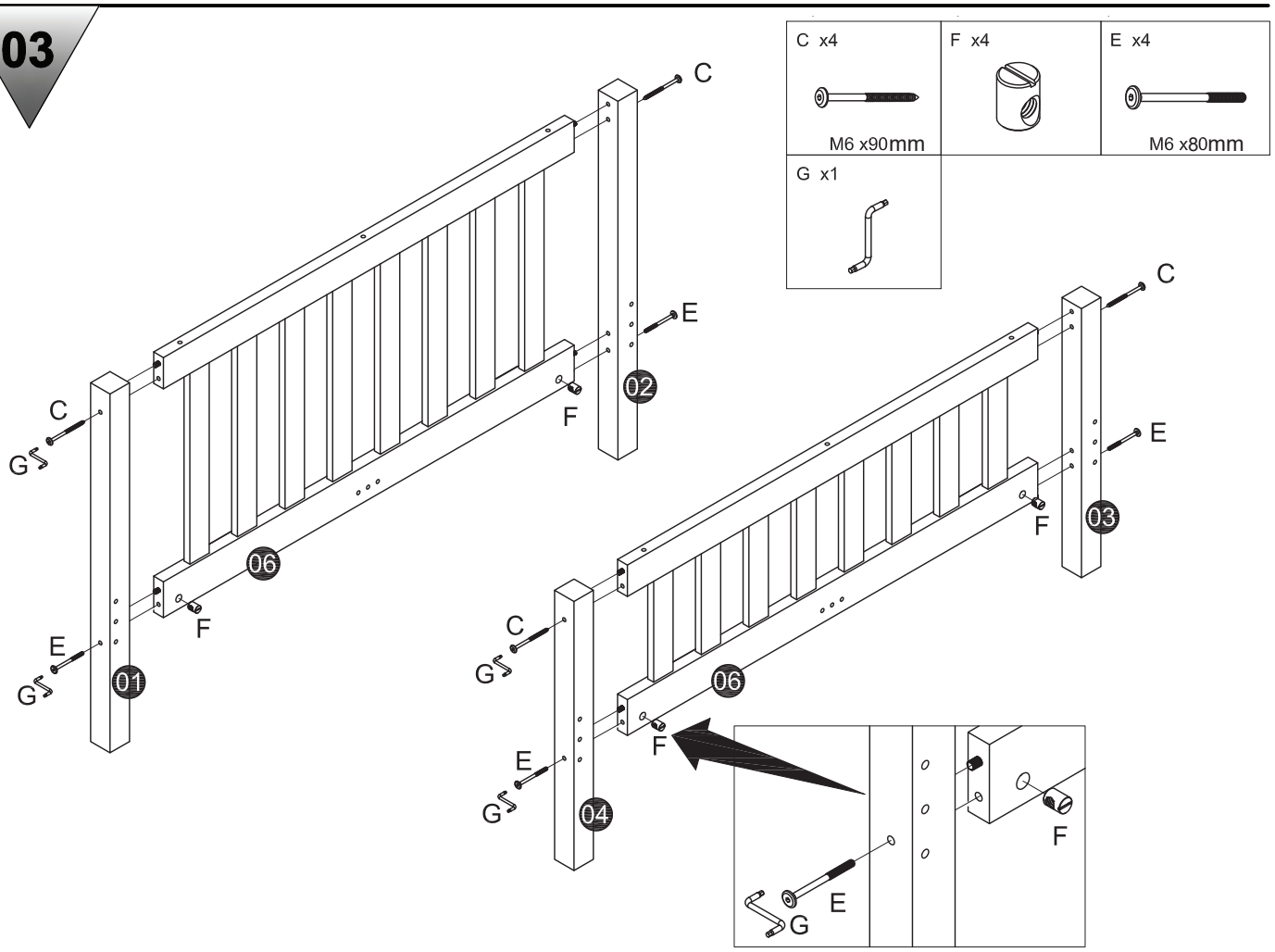
C x4
M6 x90mm
F x4
E x4
M6 x80mm
G x1
C
E
F
02
06
01
03
04

04

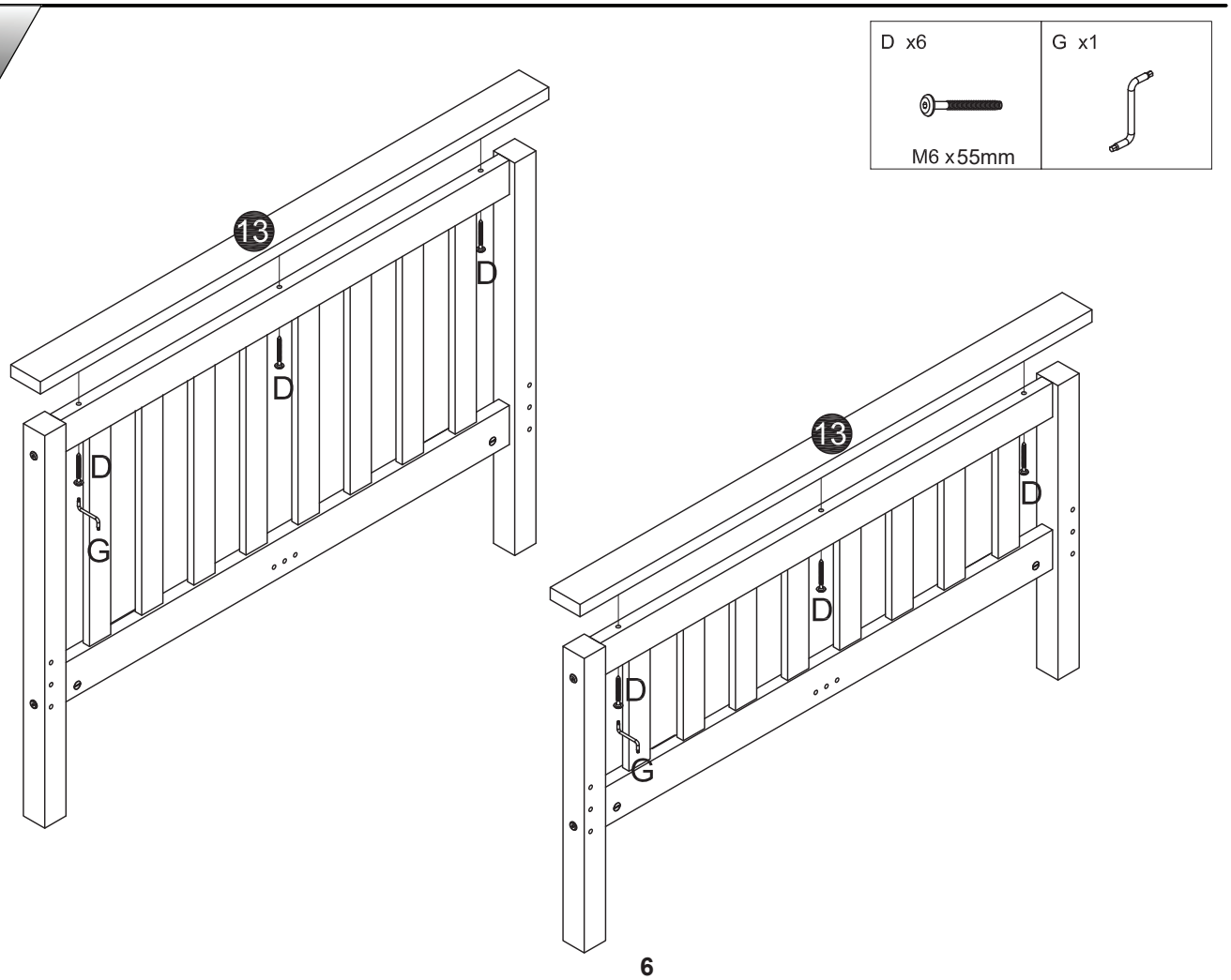
D x6
M6 x55mm
G x1
13
D
G

05

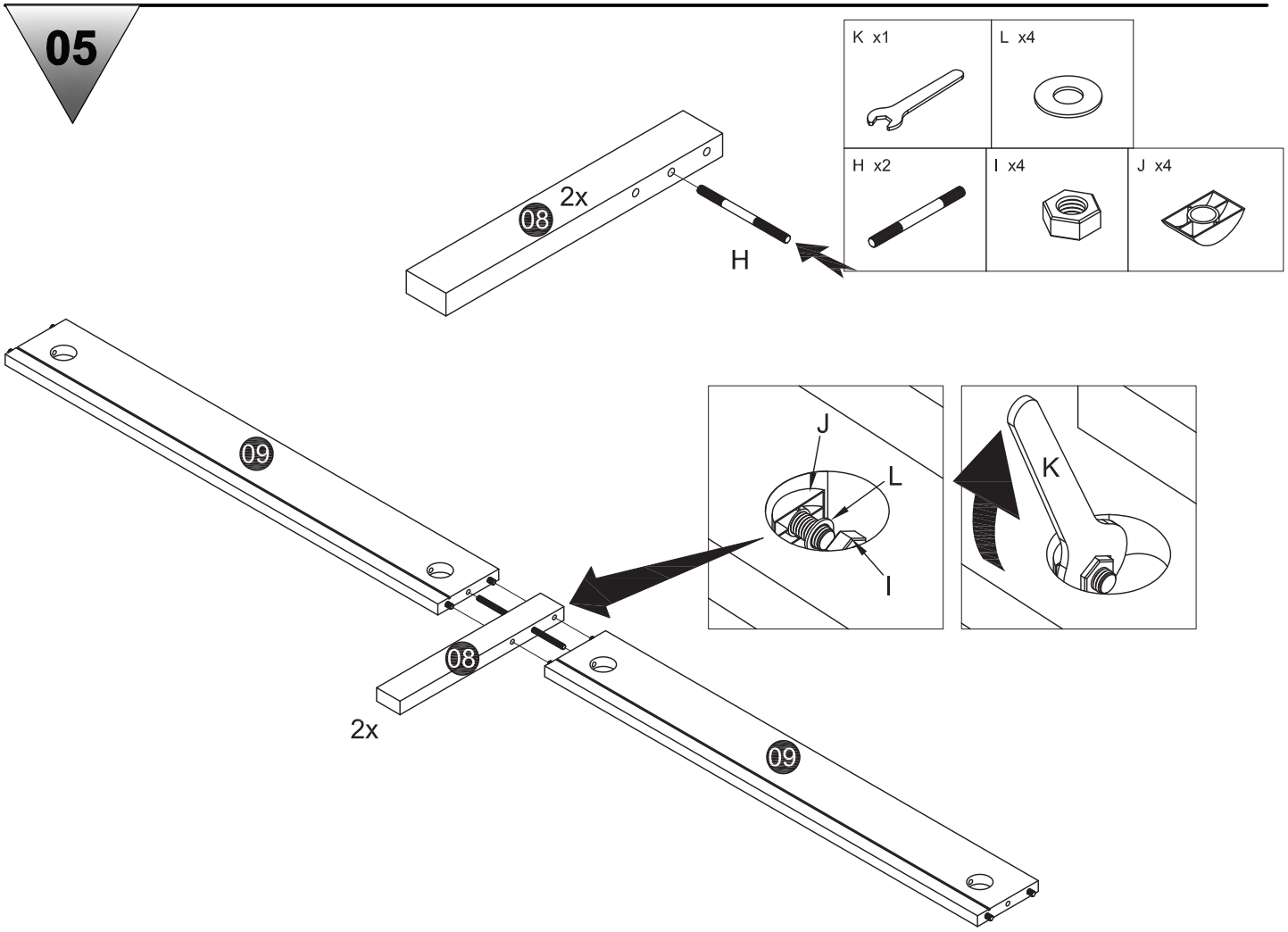
K x1
L x4
H x2
I x4
J x4
08
2x
H
09
J
L
I
K
08
2x
09

06

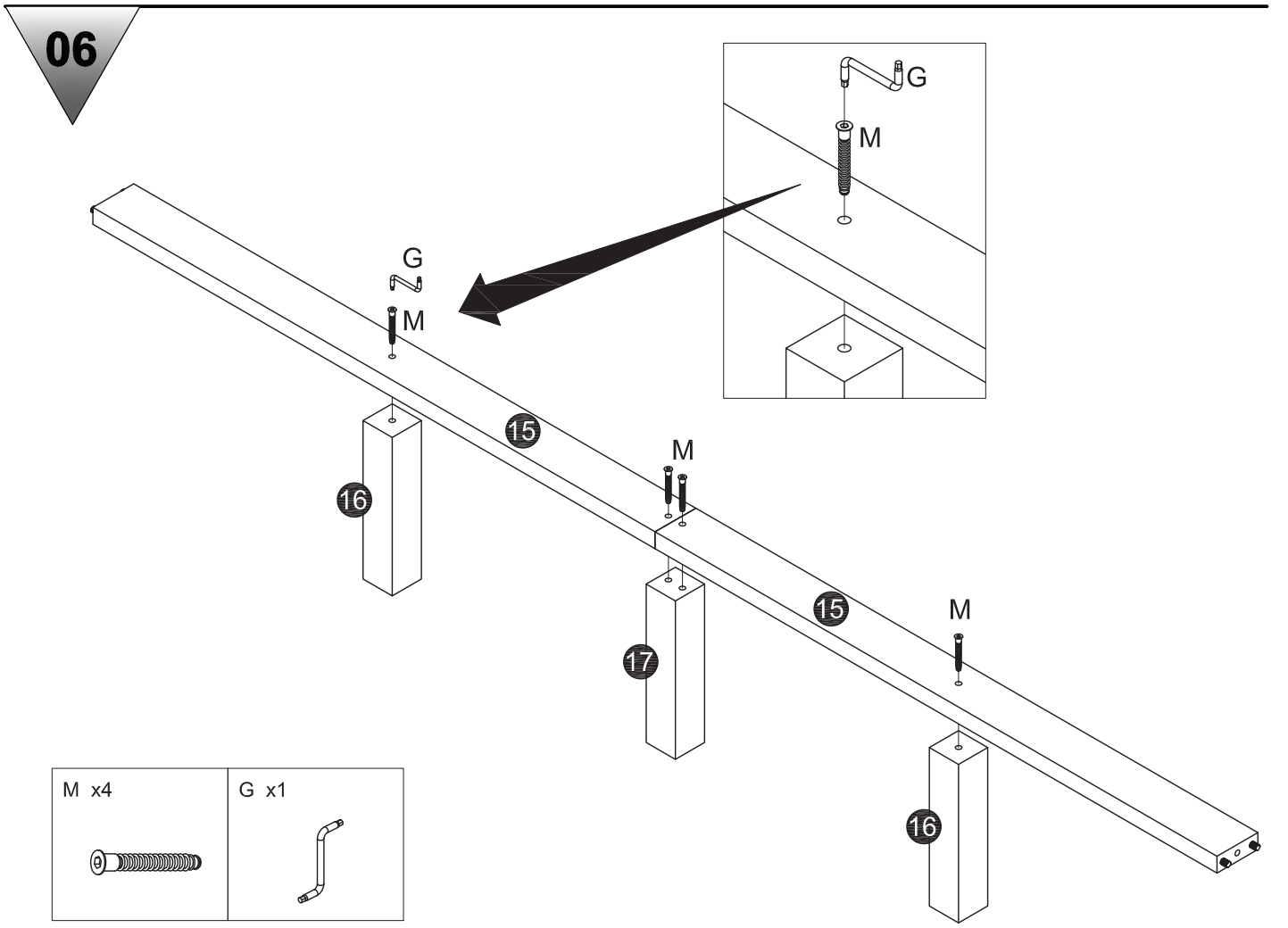
G
M
G
M
15
16
M
17
15
M
16
M x4
G x1

07

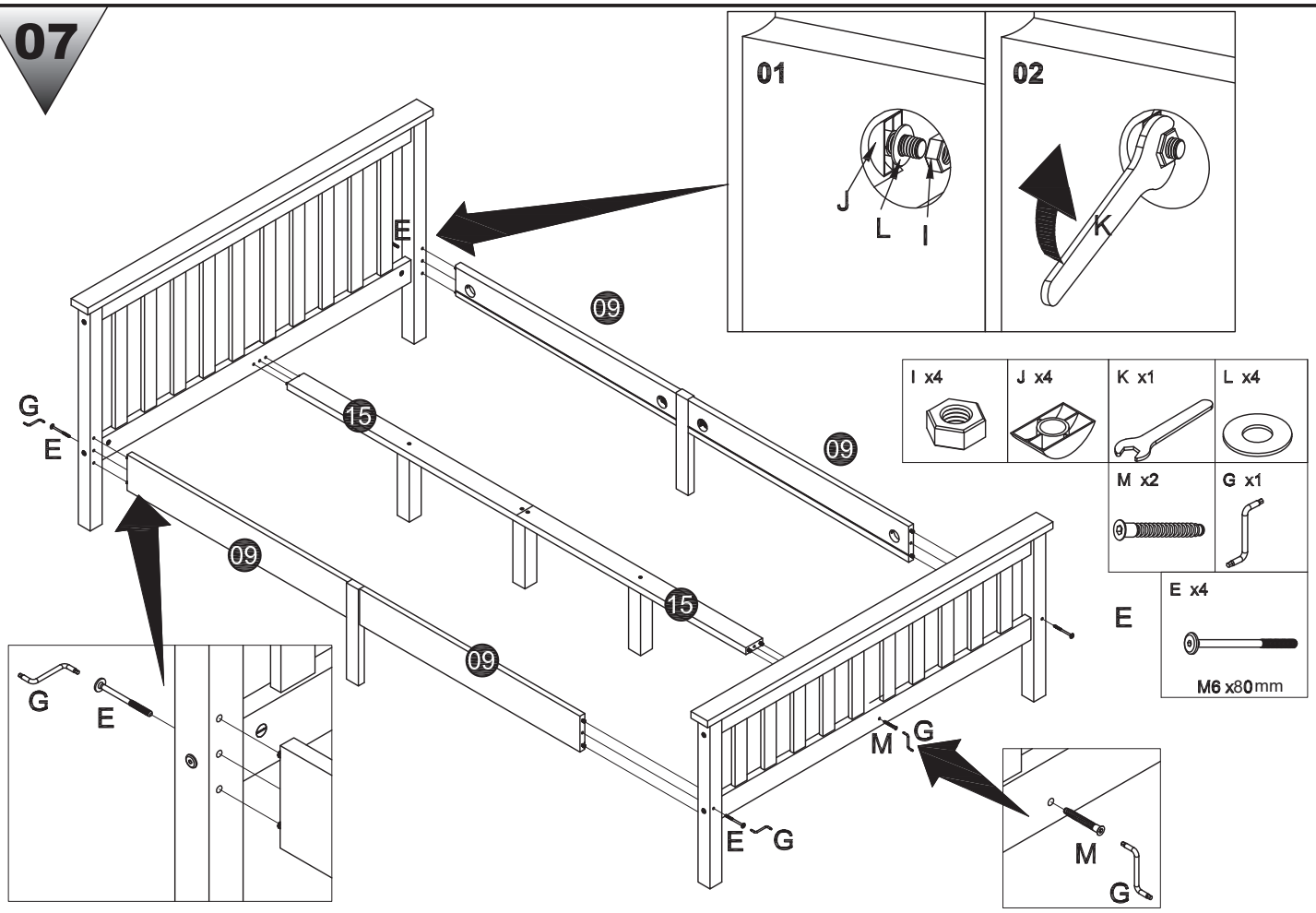

08

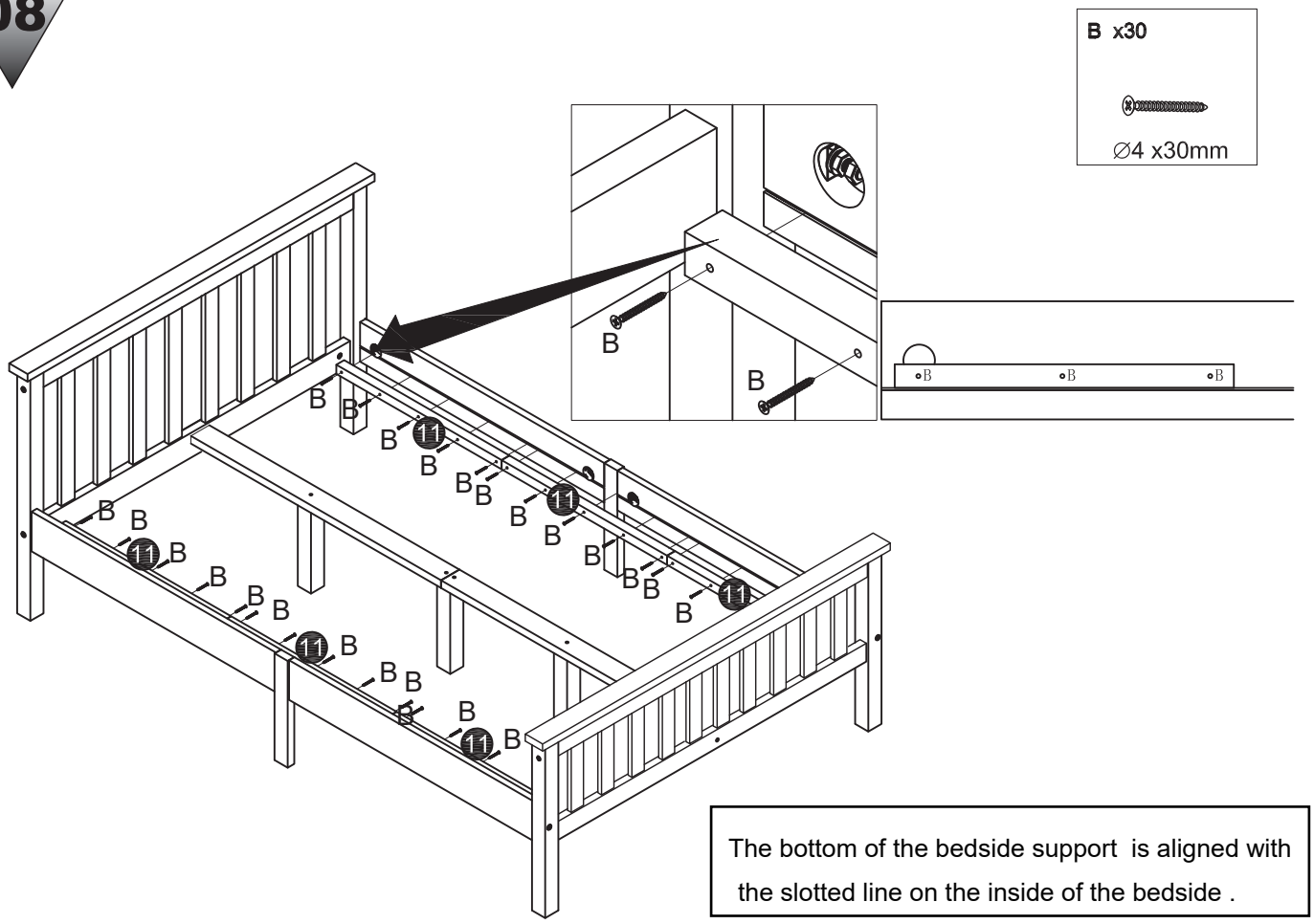

The bottom of the bedside support is aligned with the slotted line on the inside of the bedside .

09

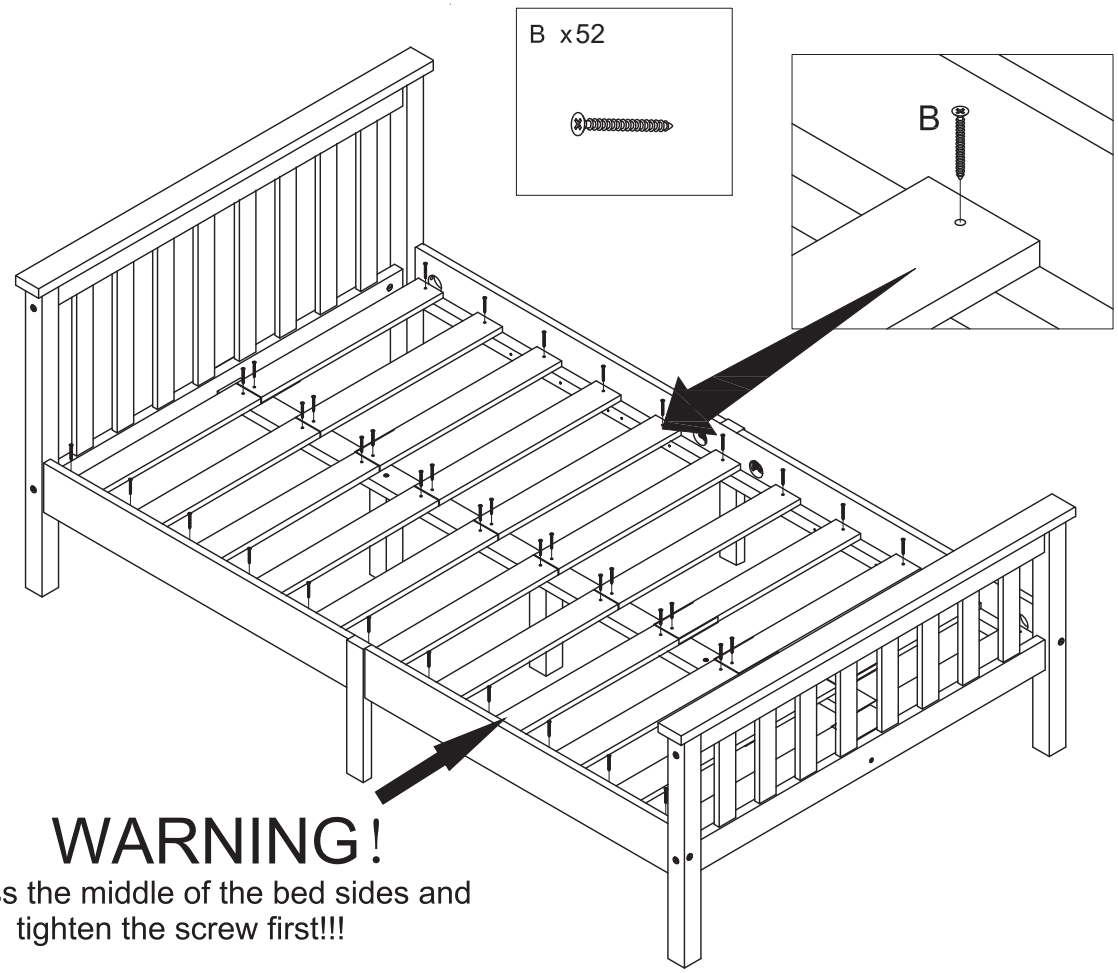

WARNING!

Press the middle of the bed sides and tighten the screw first!!!
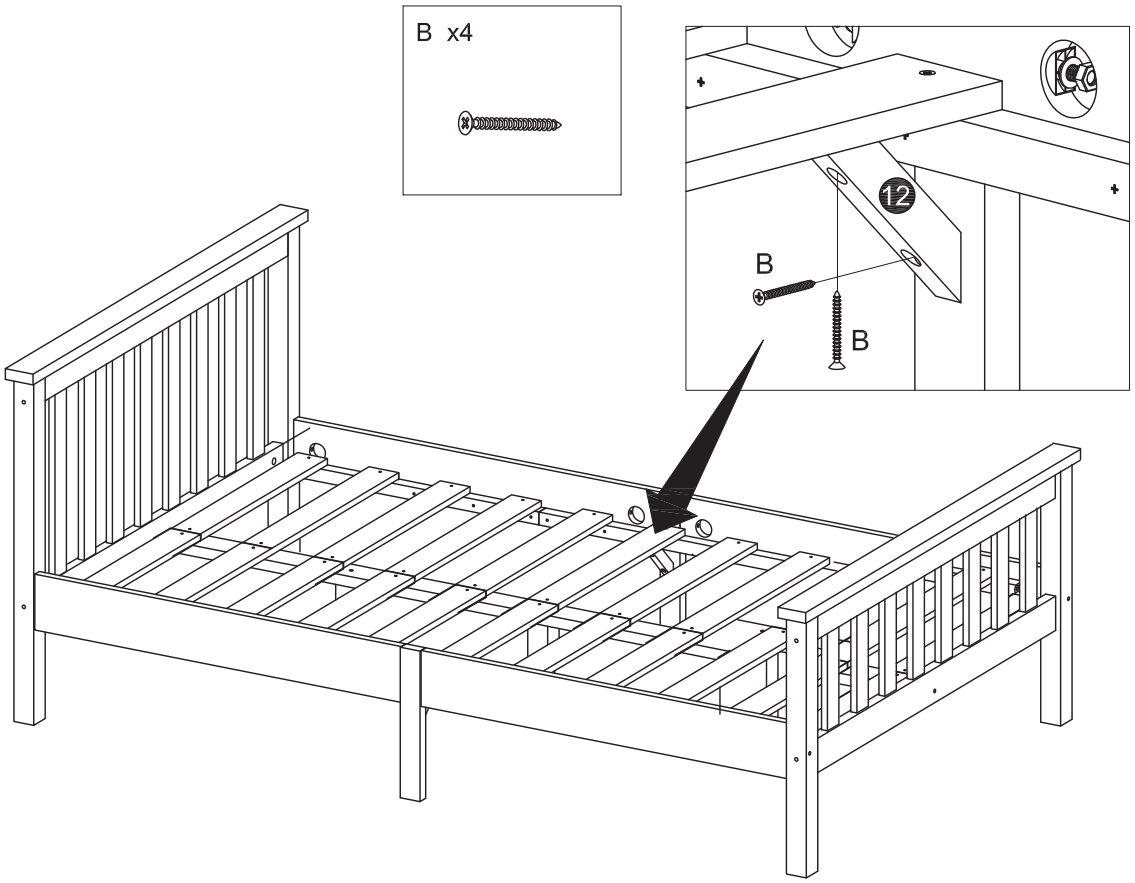
10