DREAMS IDEA

Instruction Manual



DREAMS IDEA

NO.CH0076S

ABOUT US

DREAMSIDEA IS A ONE-STOP HOME

FURNISHING AND SERVICE COMPANY BASED IN USA.

WE ARE DEDICATED TO BRING YOUR DREAM HOME TO LIFE.

OUR SERVICES COVER FROM DESIGN, PRODUCTION,

DIRECT SELL, STORAGE, AND TRANSPORTATION.

IF REALITY IS THE NEAR SHORE

AND IDEALISM THE FAR SHORE,

DREAMSIDEA

AS THE FERRY BETWEEN THEM,

EAGER TO ACCOMPANY YOU ON A JOURNEY

TO YOUR IDEAL HOME.

ITEM NO.CH0076S

WARRANTY

We strive to offer high quality product and we also try our best to satisfy each customer that order from us, no matter on products or services as needed. Each customer receives a record of their order, such as the order number or item receipt. For any items that are out of warranty period, you may still be able to purchase the replacement parts from our company if they are available.

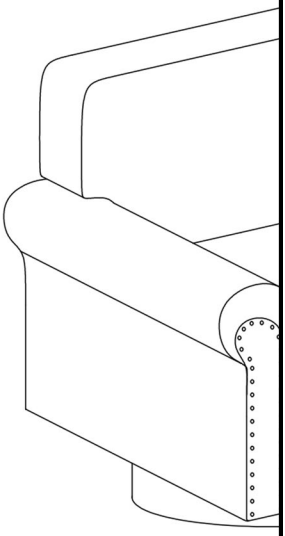

Are you having difficulty
with assembly? Missing parts?
E-mail:support@dreamsidea.com
Tel:+1-562-510-9089

send an email with your order No. to us
For return, please check the return policy with the retailer or platforms you bought from.
Appreciate your purchasing from us.
Pop up your life by our furniture !

MAINTENANCE AND WARNING

Please read the manual thoroughly before you start installing.

Please keep the product away from sharp object.

Packaging and small parts may have choking hazard, please keep them away from children and pets.

Please clean the product according to each clean code, check the product description for more information.

Please keep the product away from fire.

If you have any other questions, please contact us, we will be glad to help you out.

If the product is placed under direct sunlight, the pattern or color might fade away overtime.

Check the product periodically to make sure everything is secured and tightened.

Always use proper tools for installation.

Do not jump on the product.





Two people





Around 35 min

PRODUCT DESCRIPTION

The 360° smooth-swivel base allows you to easily face different conversation partners without standing up or moving the chair.

Classic armchair with rolled arms. Features a simple but classic silhouette. The signature wide rolled arms combined with plump seat and back cushions exude rich vintage charm and a solid sense of craftsmanship.

Cotton-linen blend fabric. Offers a natural, breathable, and skin-friendly touch, combining the softness of cotton with the texture of linen.

The features a sturdy solid wood frame that ensures long-term stability and load-bearing capacity. The large metal turntable with a wood-grain finish at the bottom further enhances overall stability and adds a refined design detail.

Multi-functional relaxation core. Serves as both a comfortable solitary reading chair and a tasteful accent chair in the living room, either as a statement master chair or flexible as the sofa. Its substantial presence and unique design inject steady and style into any corner.

EXPLODED VIEW

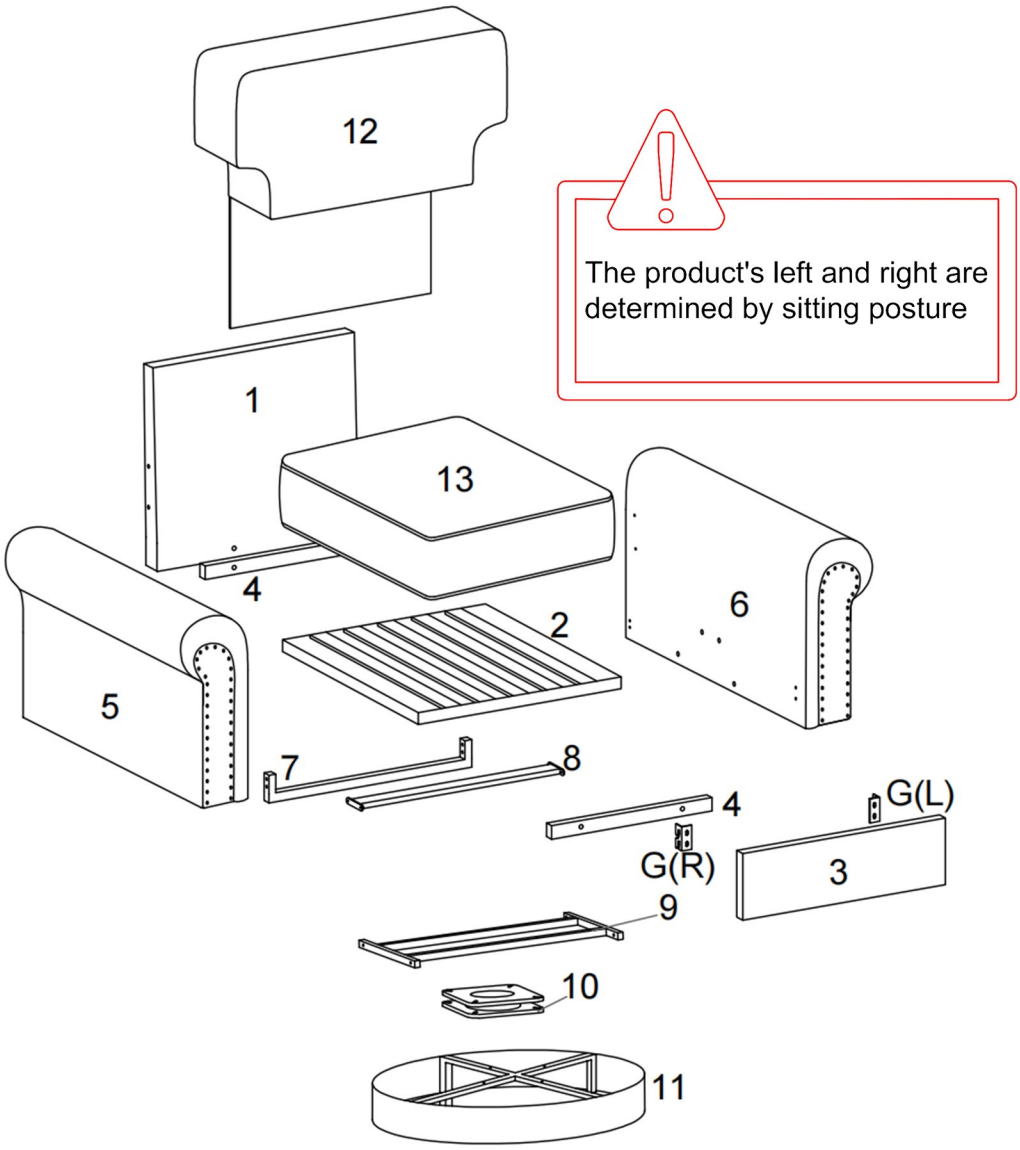

PARTS

5*1

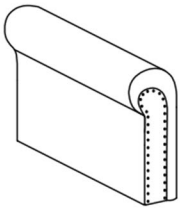

Right arm

6*1

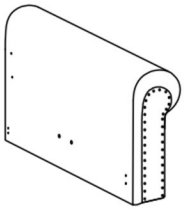

Left arm

1*1

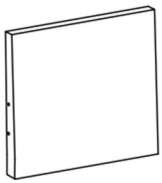

Backrest

8*1



Connect bar

7*1



Rear connect bar

3*1



Front panel

4*2



Rail bar

13*1

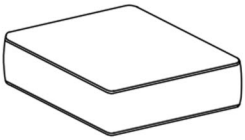

Seat cushion

12*1

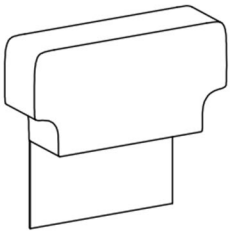

Back cushion

2*1

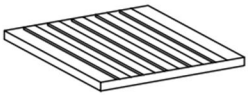

Seat frame

11*1

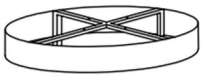

Round base

9*1



Connecting rod

10*1



Swivel plate

HARDWARE

TOOL LIST

A*12



M6*16mm
Bolts

B*12

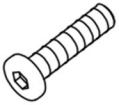

M6*30mm
Bolts

C*4



M6*40mm
Bolts

D*4

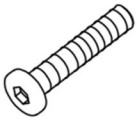

M6*60mm
Bolts

E*20



M6
Flat washer

F*1



Allen key

G*4



M8*35mm
Bolts

H*4



M8
Flat washer

L*1

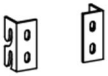

Connecting iron plate

Please make sure all hardware&packing material fitting the list. Especially some small accessories may be missing during transportation. Please contact us if you have any question.

step 1 ---Cut the plastic air compression bags

Cut the plastic air compression bags, and take out the cushion (12&13). Let it recover to its original shape, the whole recovery process might take 48 hours, you may gently slap on it to speed up the process.

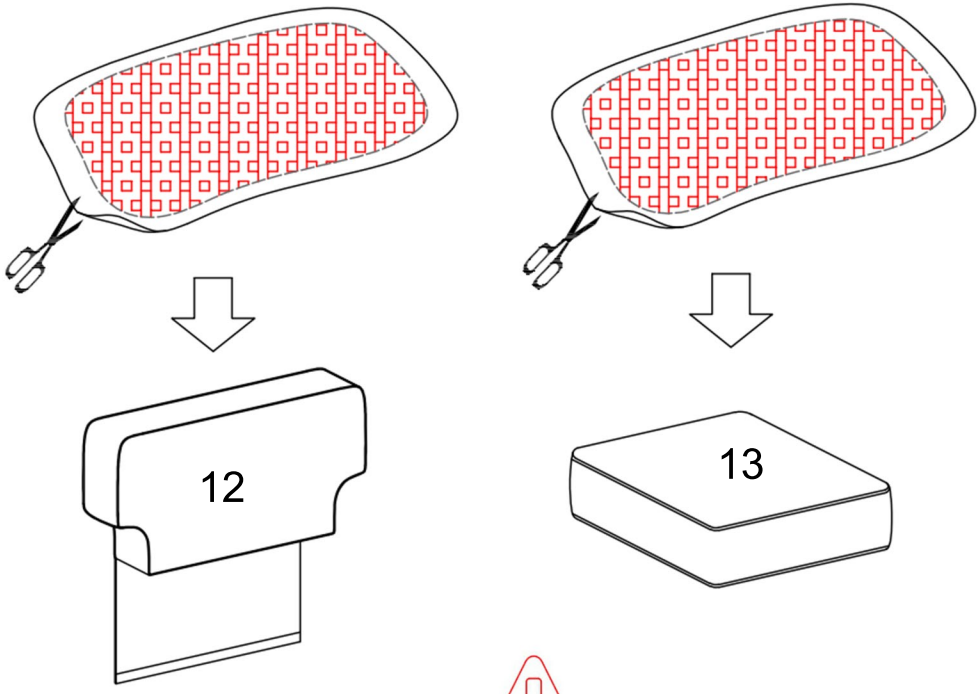

Please exercise caution when opening the packaging to avoid injury or damage to the product.

step 2 ---Take out the chair components

Take out the chair components from the Armrest frame.

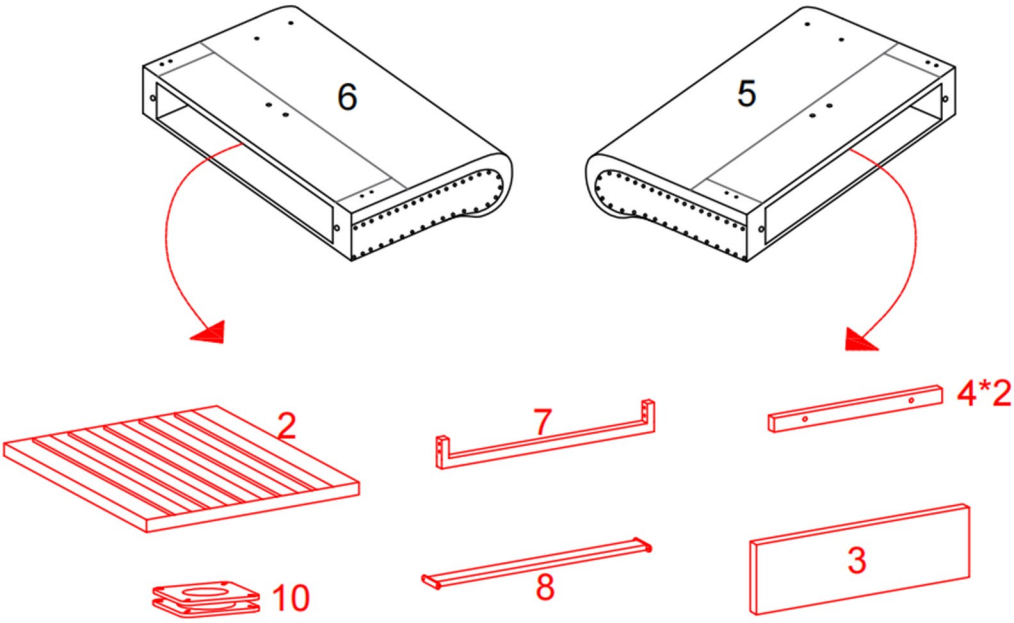

step 3 ---Install the Rail bar (4) and Connecting iron plate (L)

As shown in the diagram, first attach the Rail bar (4) to the Front panel (3),Use the allen key (F) provided to tighten Bolts(B) and Flat washer (E).

Attach the Connecting iron plate (L) to the Front panel (3),Use the allen key (F) provided to tighten Bolts(A).

Note: Make sure the Velcro on the wooden strip faces the arrow direction shown in the figure.

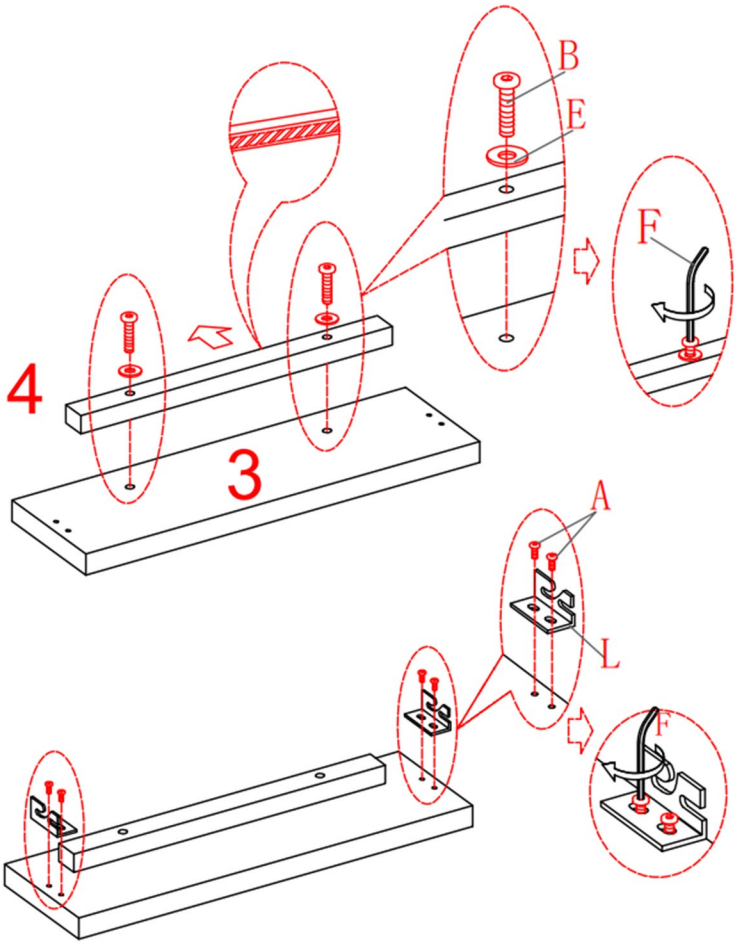

step 4

Pre-install Bolts (B) into the corresponding holes of the Armrest as shown in the figure, screw in 30%.

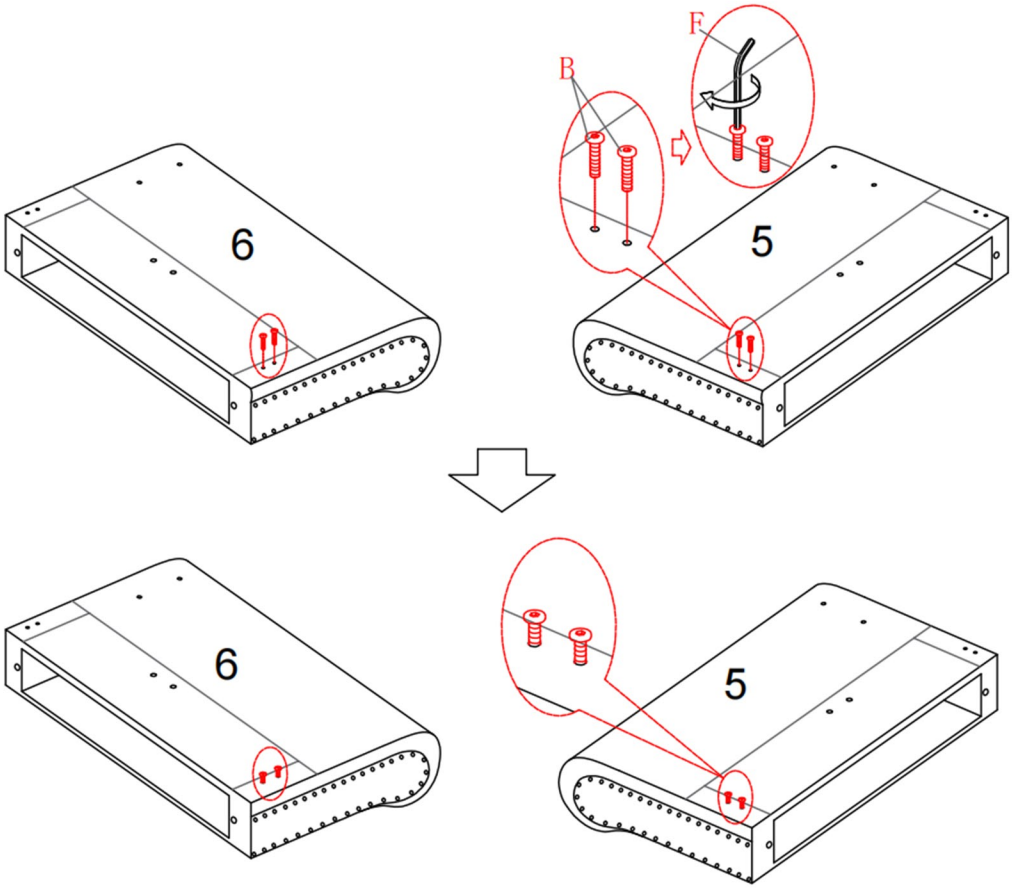

step 5 ---Install front panel (3)

Slide the front panel into the corresponding position as shown in the figure, tighten it with Allen key (F).

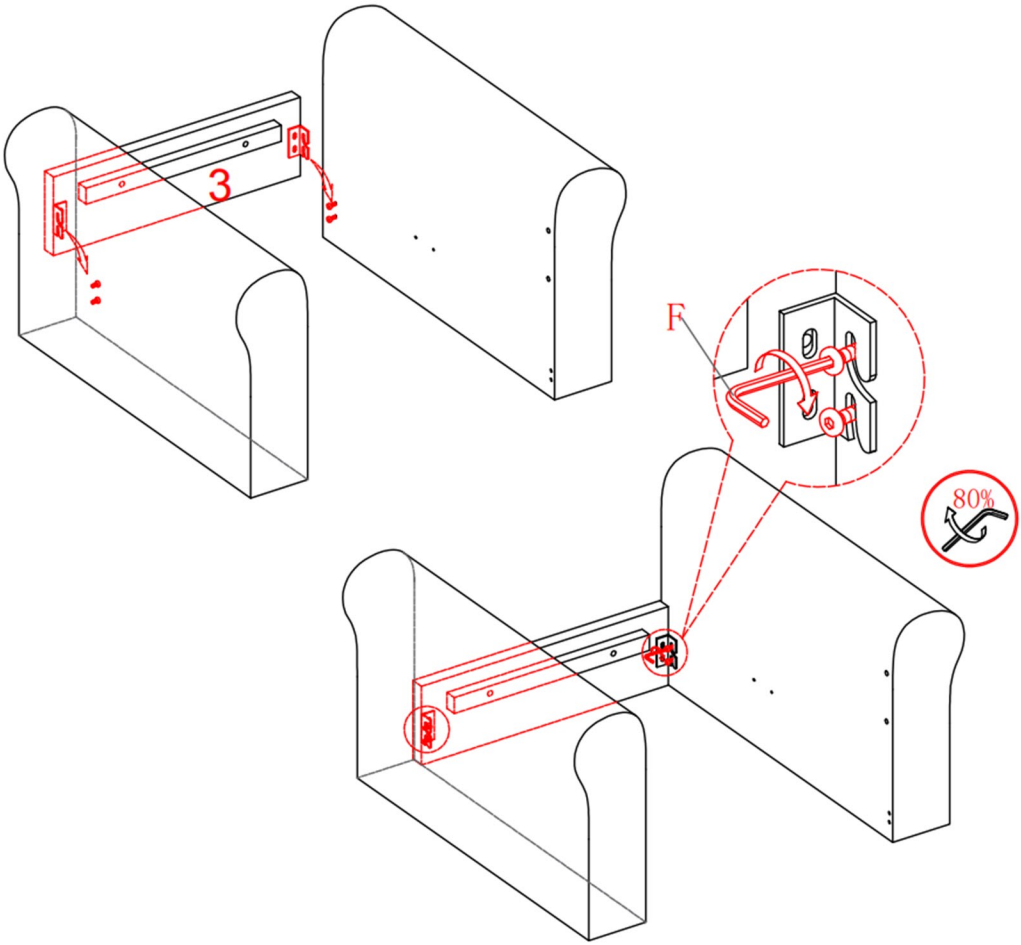

step 6 ---Install the Rail bar (4)

As shown in the diagram, first attach the Rail bar (4) to the Backrest (1),Use the Allen key (F) provided to tighten Bolts(B) and Flat washer (E).

Note: Make sure the Velcro on the wooden strip faces the arrow direction shown in the figure.

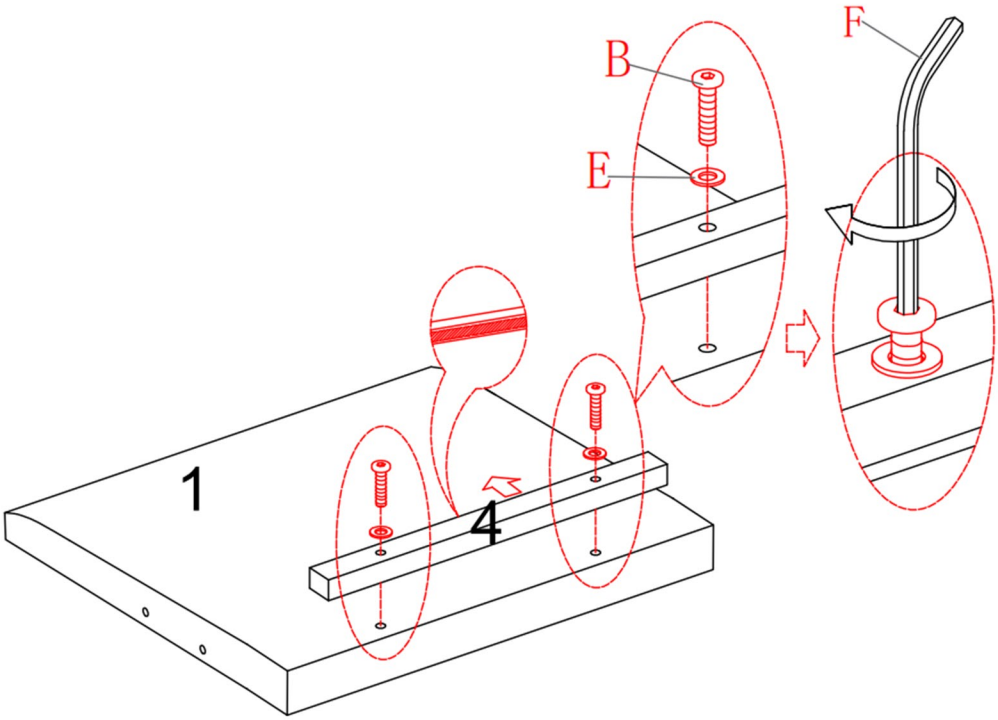

step 7---Install the Backrest (1)

Install the Backrest (1) between the Armrests (5 & 6).
Use the allen key (F) provided to tighten all four Bolts(D) and Flat washer (E), DO NOT tighten the Bolts completely.

We suggest tightening the bolts for 30-50% first, make sure the process is correct and bolt holes are aligned, then fully tightening them all.

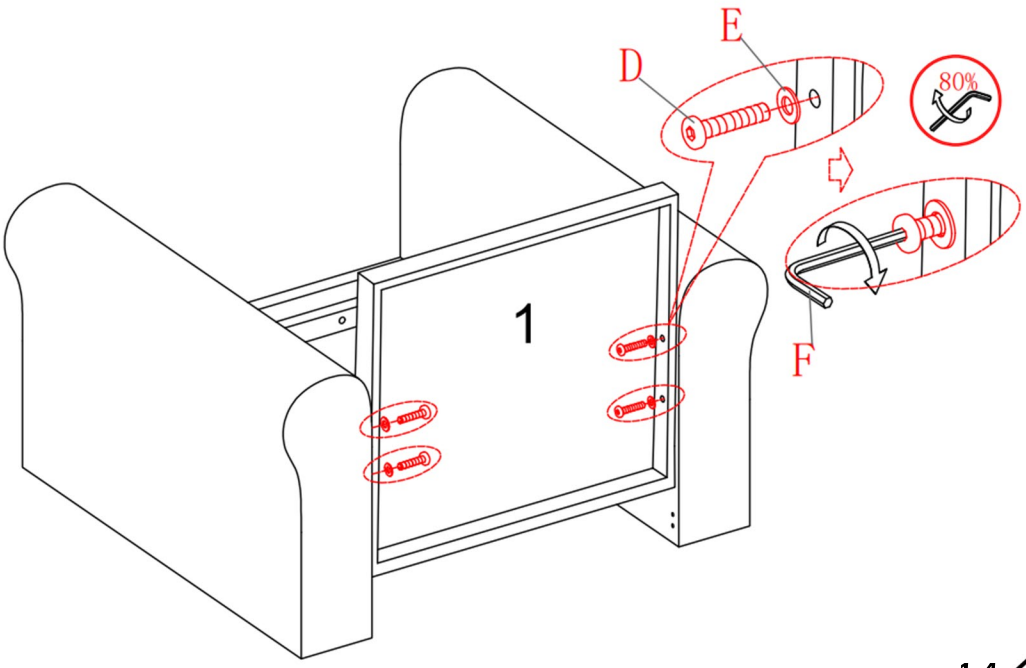

step 8 ---Install the Rear Connect Bar (7)

Then, install the Rear Connect Bar (7) between the Armrests (5 & 6).
Use the allen key (F) provided to tighten all four Bolts(C), DO NOT tighten the bolts completely.

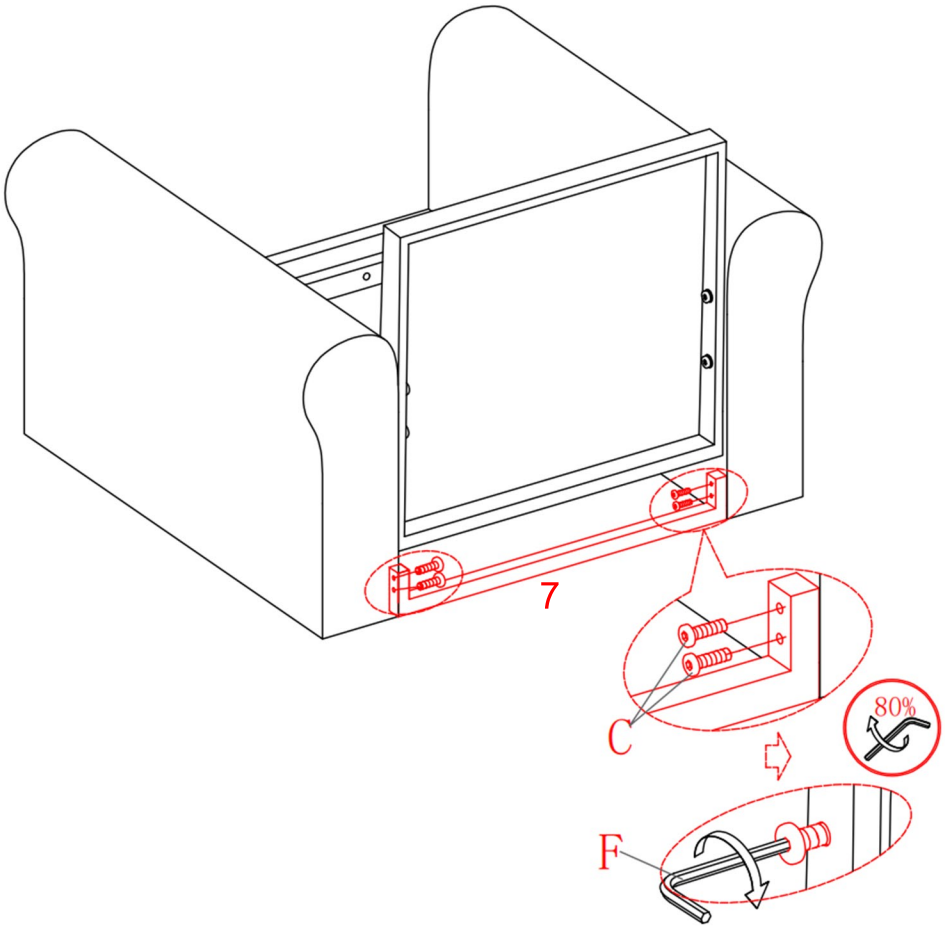

step 9 ---Install the Connect Bar (8)

Install the Connect Bar (8) between the Armrests (5 & 6).
Use the allen key (F) provided to tighten all four Bolts(B) and Flat wahser (E), DO NOT tighten the bolts completely.

We suggest tightening the bolts for 30-50% first, make sure the process is correct and bolt holes are aligned, then fully tightening them all.

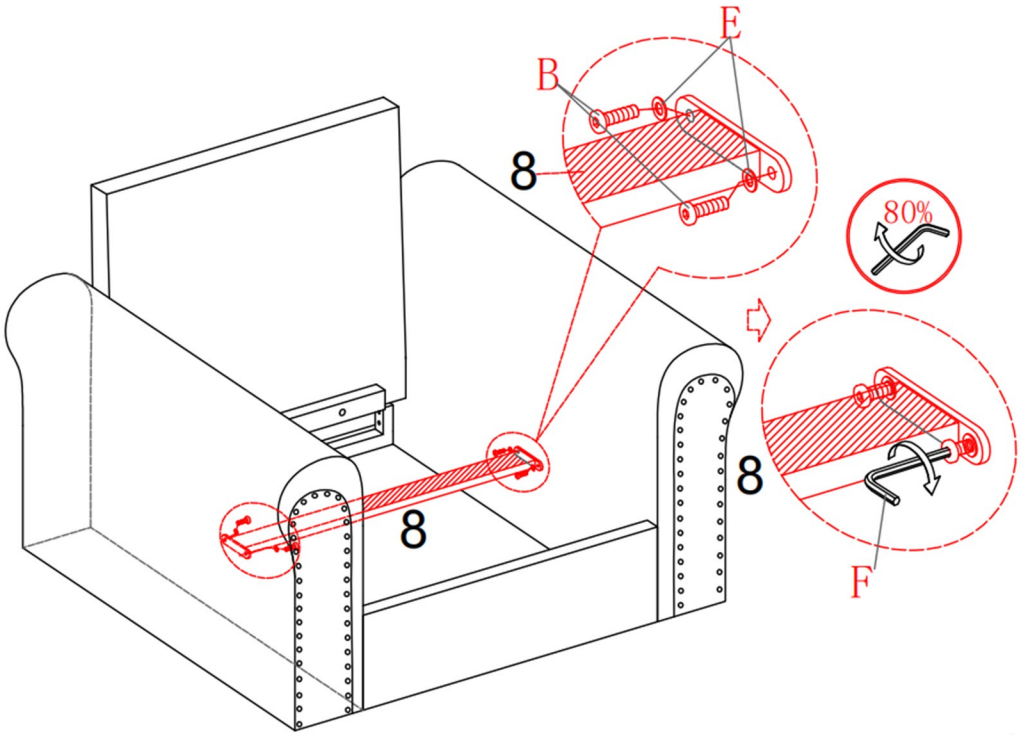

step 10 ---Install the Connecting rod (9)

Install the Connecting rod (9) between the Armrests (5 & 6). Use the allen key (F) provided to tighten all four Bolts (G) and Flat wahser (H).

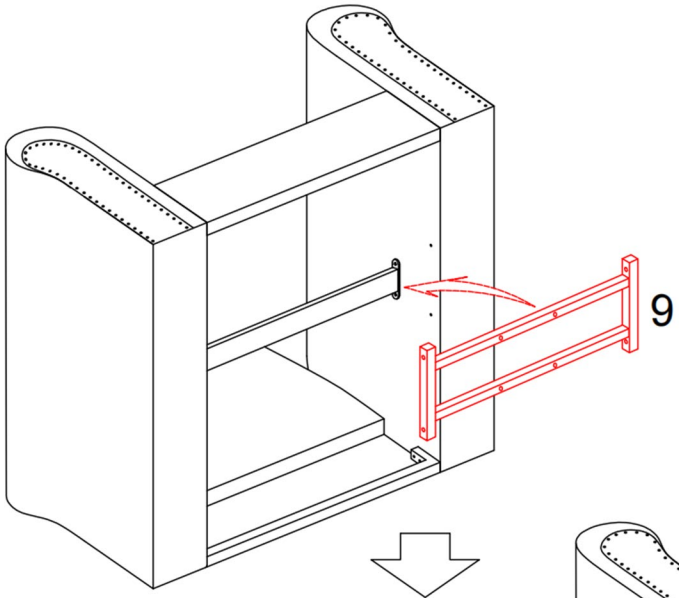

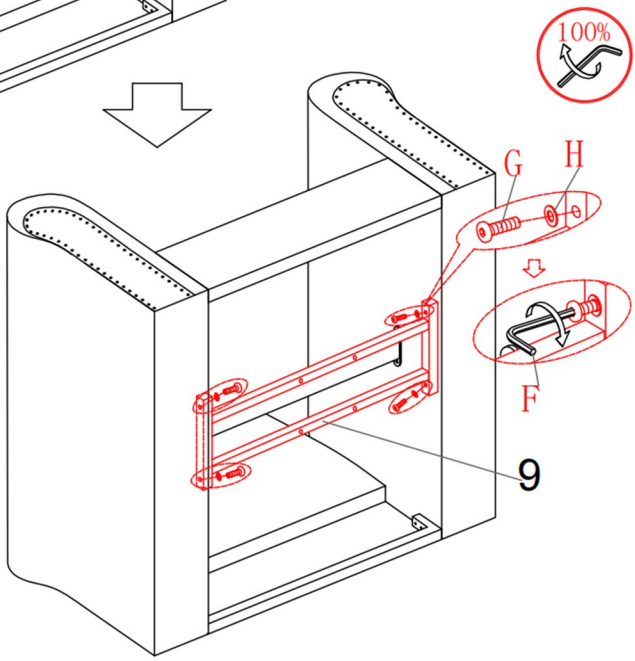

We suggest tightening the bolts for 30-50% first, make sure the process is correct and bolt holes are aligned, then fully tightening them all.

step 11

Tighten all bolts.

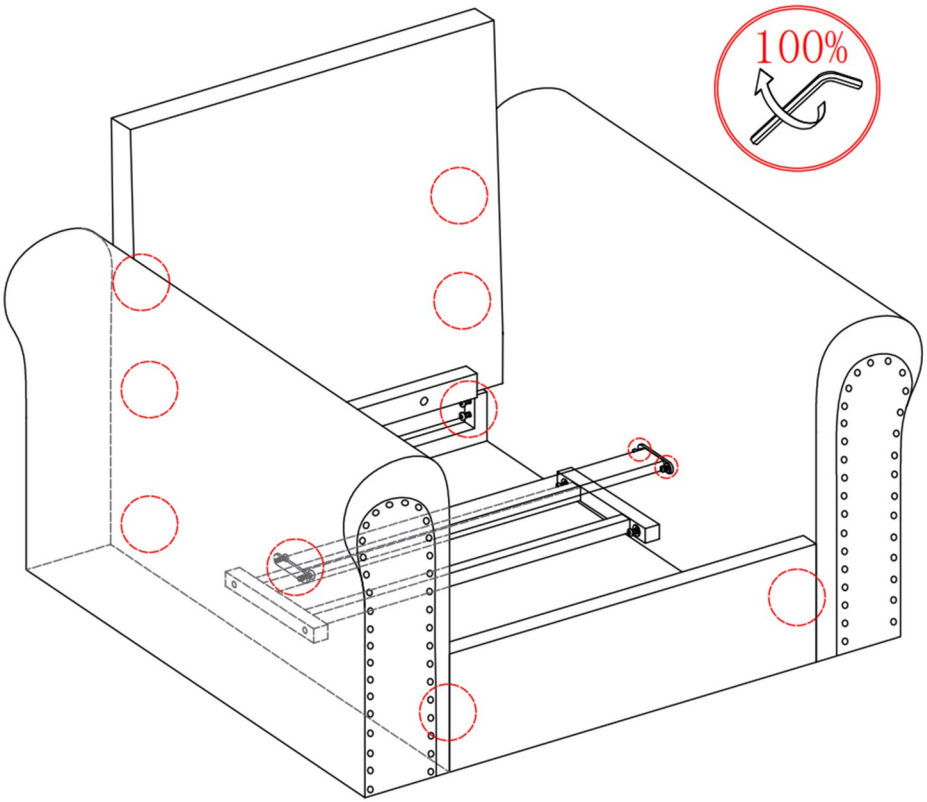

step 12 ---Install the Rotary base(10)

Install the Rotary base (10) onto the Round base (11), use the allen wrench (F) provided to tighten the bolts (A), make sure all four bolts are fully tightened.

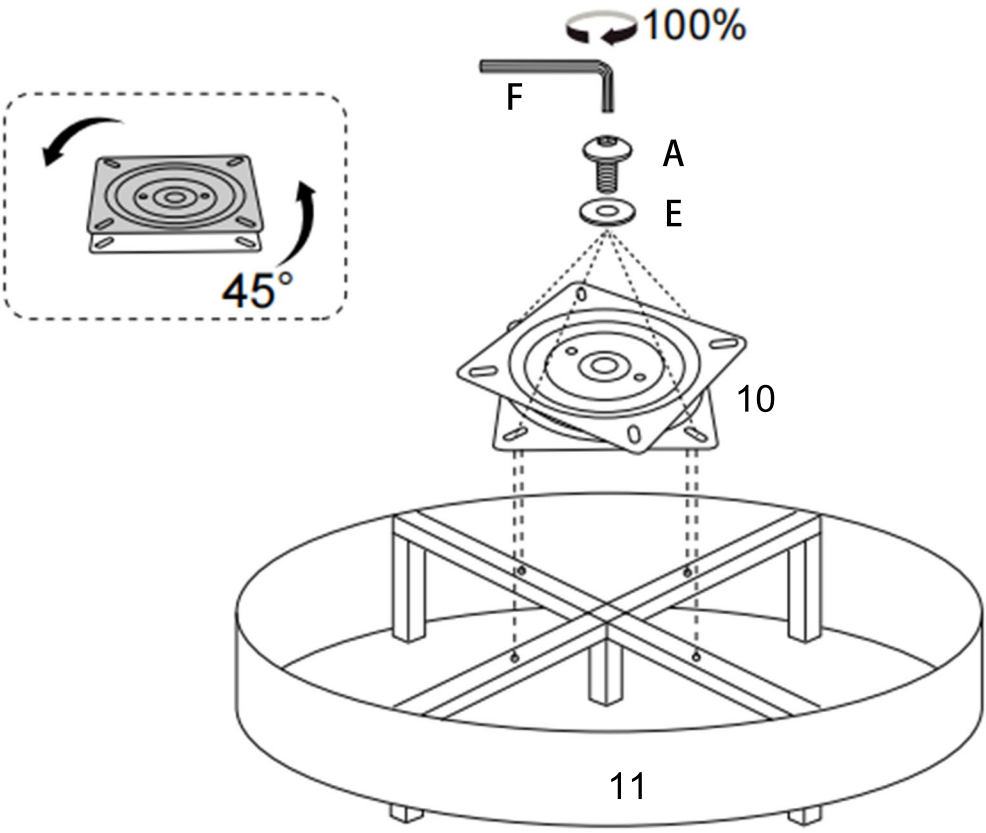

step 13 ---Install the Round base(11)

Install the Round base (11) onto the Connecting rod (9), use the allen wrench (F) provided to tighten the bolts (A), make sure all four bolts are fully tightened.

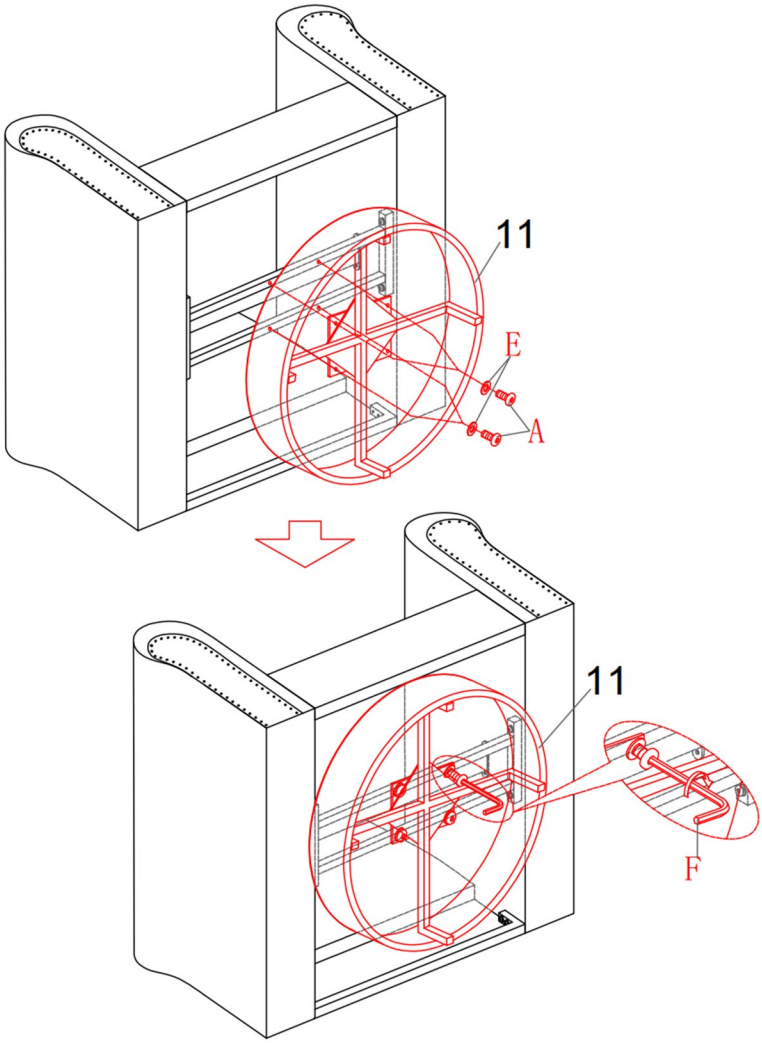

step 14 ---Place the Seat frame (2) on it

Lay the seat frame (2) flat and align it with the position shown in the figure.

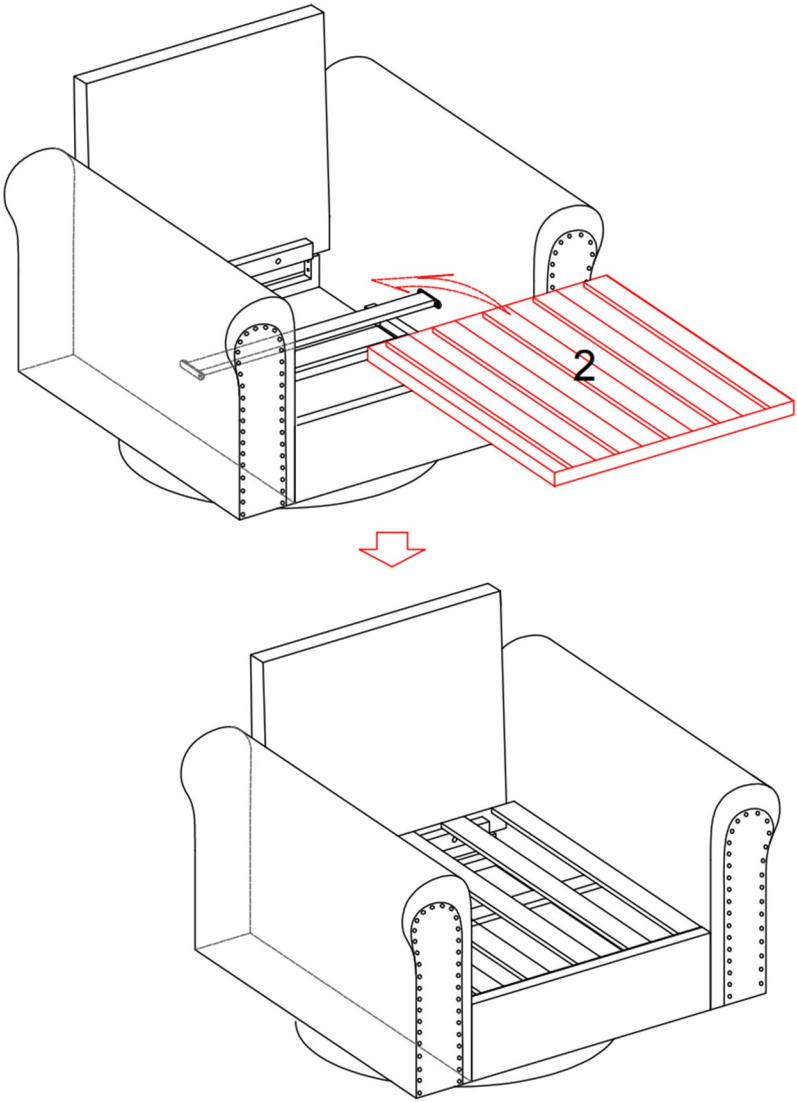

step 15 ---Place the Seat cushion (13)

Place the Seat cushion (13) on it.

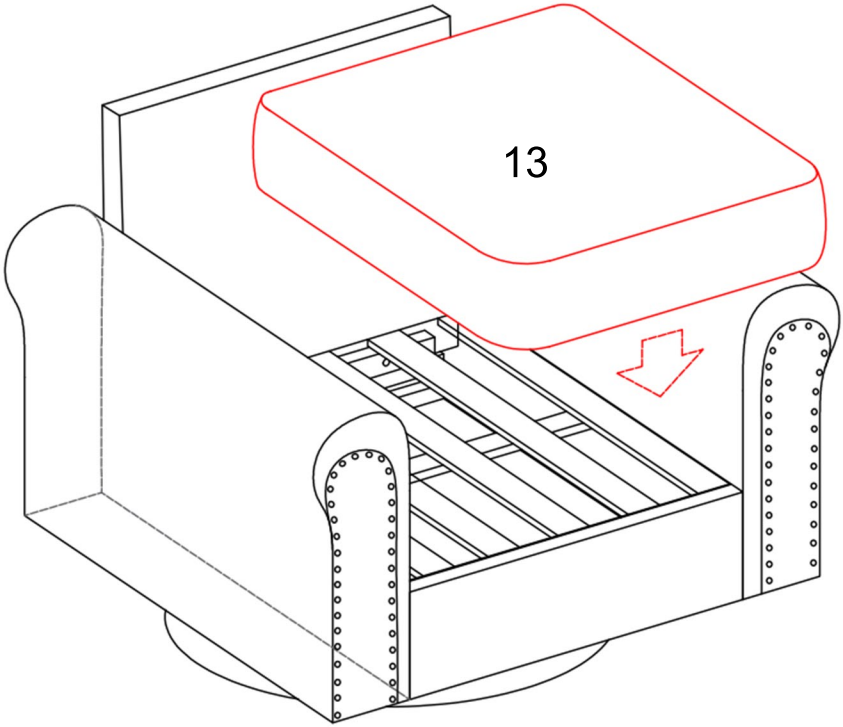

step 16 ---Install the Back cushion (12)

Slide the Back Cushion (12) over the Back Frame. Secure the velcro flap at the bottom/back as illustrated.

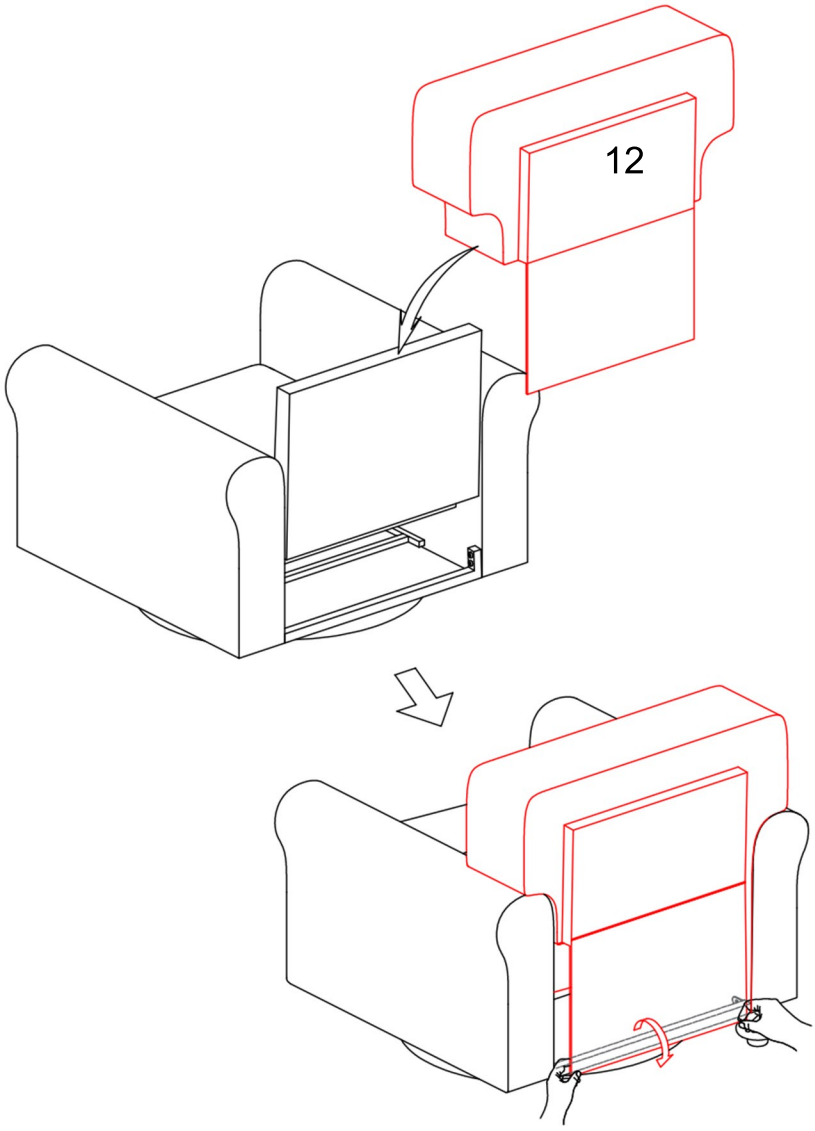

step 17

The chair can rotate 360 degrees.

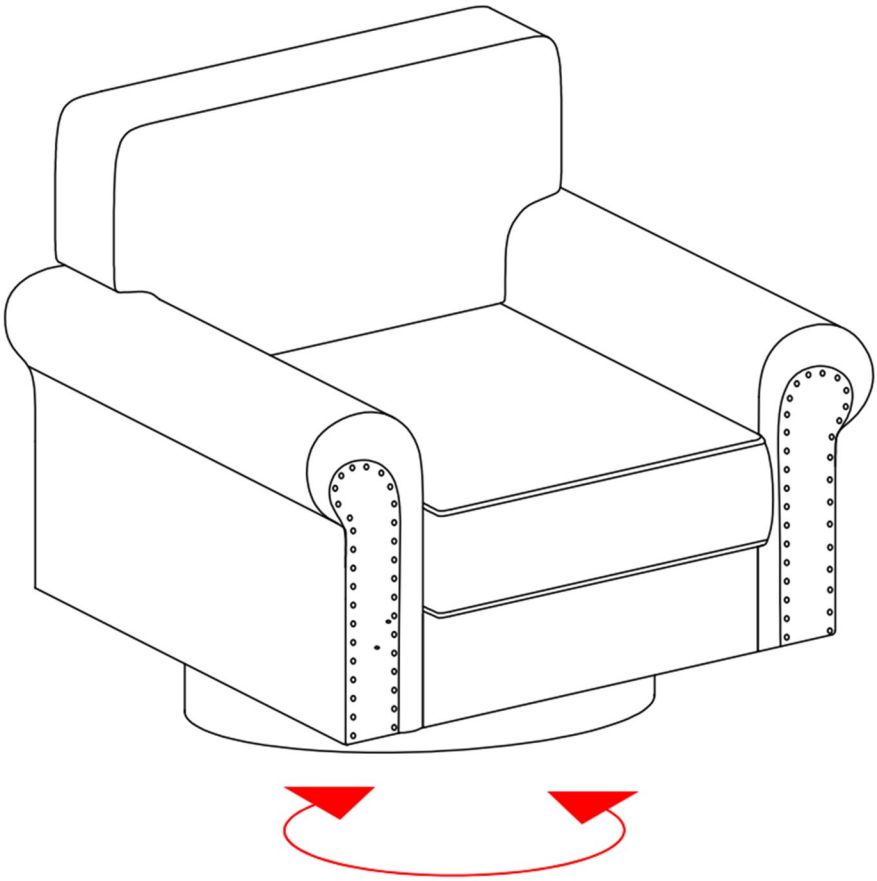

step 18

Congratulations! The installation is complete! Thanks again for choosing our product! Please enjoy!

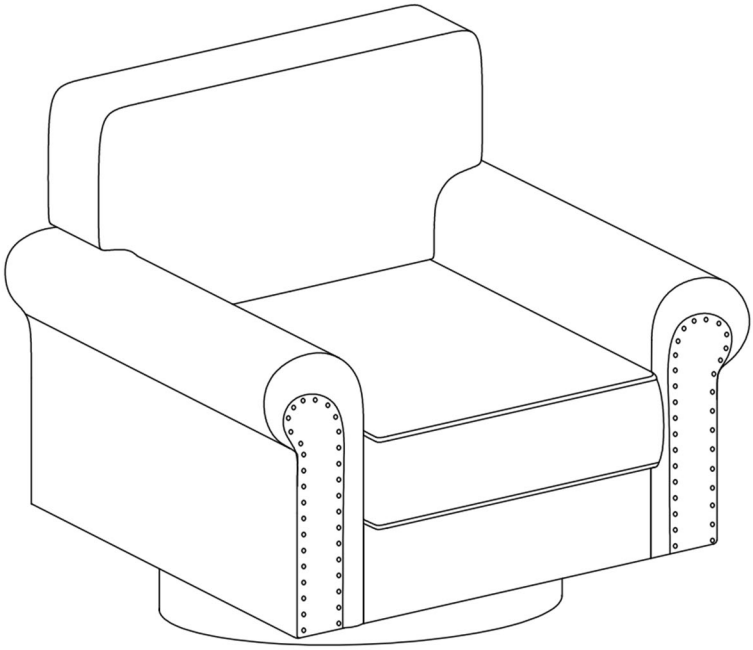



ASSEMBLY INSTRUCTIONS

Tel.+1-562-510-9089

E-mail:support@dreamsidea.com

https://www.dreamsidea.com