THE OPERATING MANUAL OF LARGE RIFLE SAFE

Tip: Please take a few minutes to read the installation instructions and do not keep the emergeney keys in the gun cabinet!

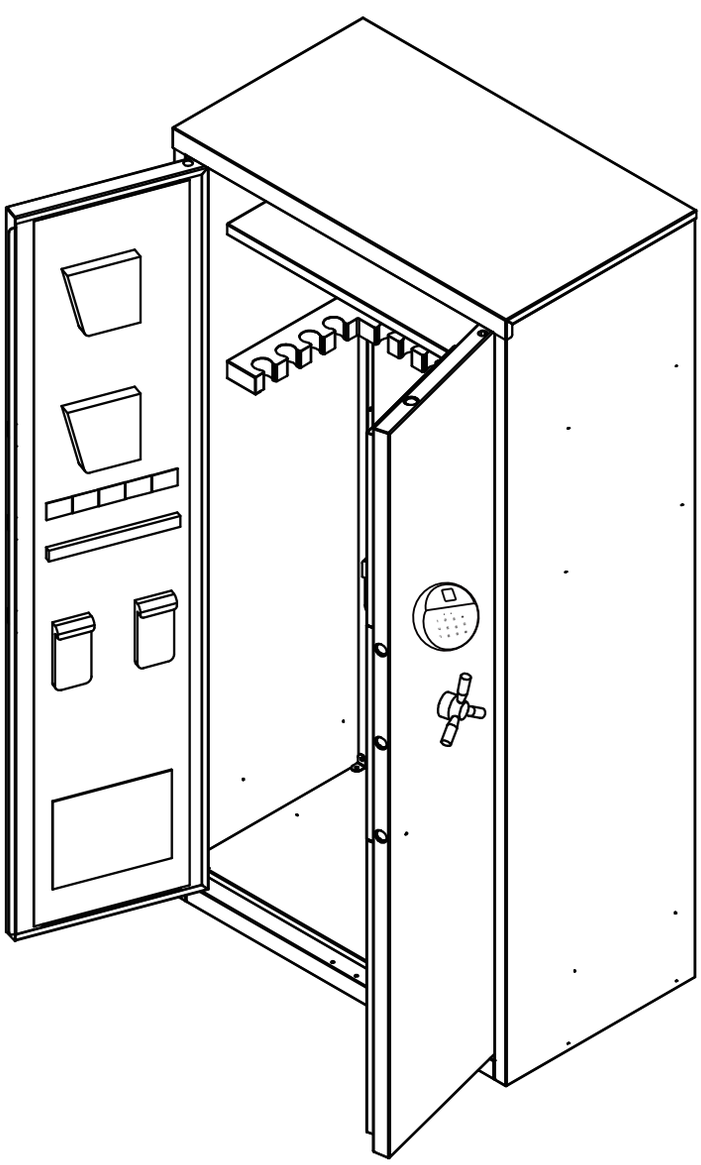

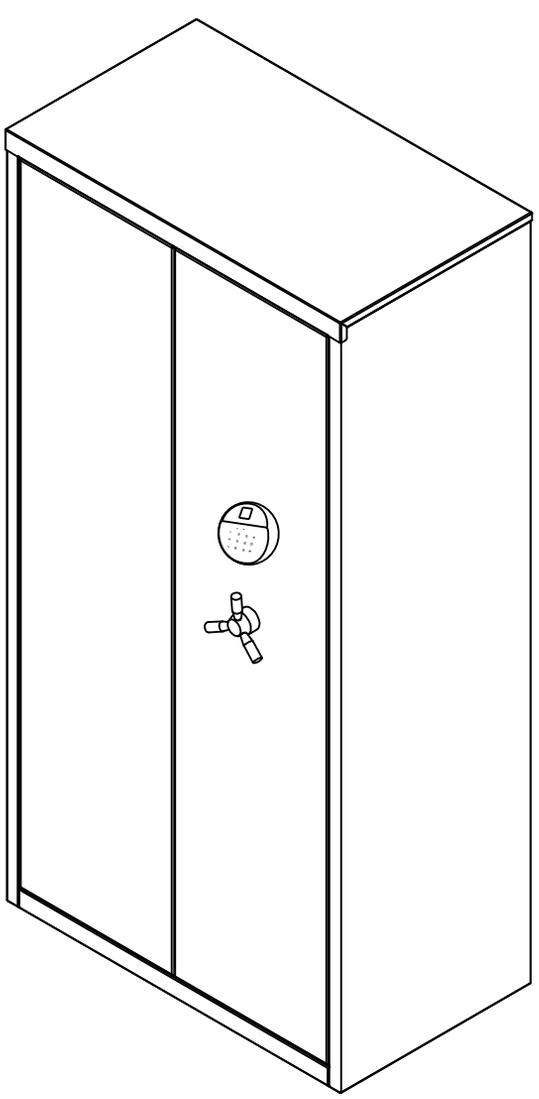

1. Please read the complete installation instructions.carefully before assembling the gun cabinet.
2. Check the materials tomake sure they are normal and not damaged.
3. Refer to the illustrations toidentify the parts and accessories of the gun cabinet.

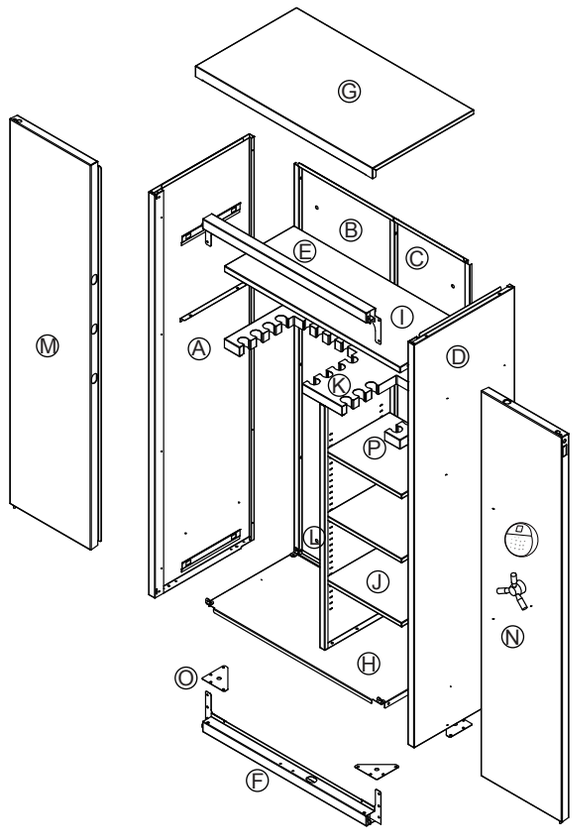

 A	 B	 C	 D	 E	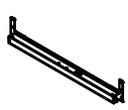 F	 G
(Left Side Plat) 1 PC	(Left Back Plate) 1 PC	(Right Back Plate) 1 PC	(Right Side Plate) 1 PC	(Upper Door Frame) 1 PC	(Bottom Door Frame) 1 PC	(Top Plate) 1 PC
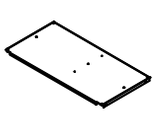 H	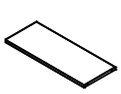 I	 J	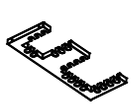 K	 L	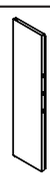 M	 N
(Bottom Plate) 1 PC	(Compartment divider) 1 PC	(Small dividers) 3 PCS	(Gunstock laminate) 1 PC	(Middle vertical plate) 1 PC	(Left Door Plate) 1 PC	(Right Door Plate) 1 PC
 O	 P					
(Triangular Iron Sheet) 4 PCS	(Magnetic gun stock) 1 PC	(Top Buckle)12 PCS (Bottom Buckle)12 PCS	(Fixed Buckle) 4 PCS	(M5 Screws) 74 PCS	(Door Hinge) 2 PCS	(Gasket) 2 PCS
		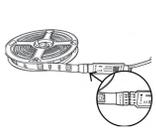	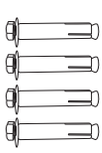			
(Support foot) 2 PCS	(Rotatable handle) 3 PCS	(Colorful lanterns) 1 PC	(Expansion bolt) 4 PC	(Screwdriver) 1 PC	(Gloves) 1 PC	(Key) 1 PC
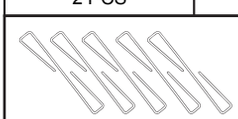 (Pistol Hanger) 5 PCS						

Installation instructions



Safety warning

Without safety reinforcement prior to installation, tipping can cause serious injury to children and adults.Children should not play near gun cabinets.

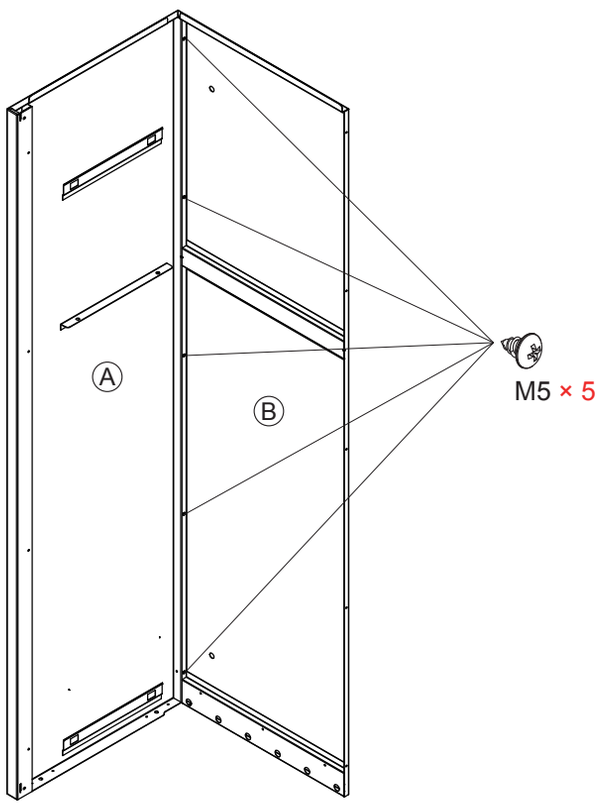

Step 1

Connect Ⓐ and Ⓑ together using five M5 screws.

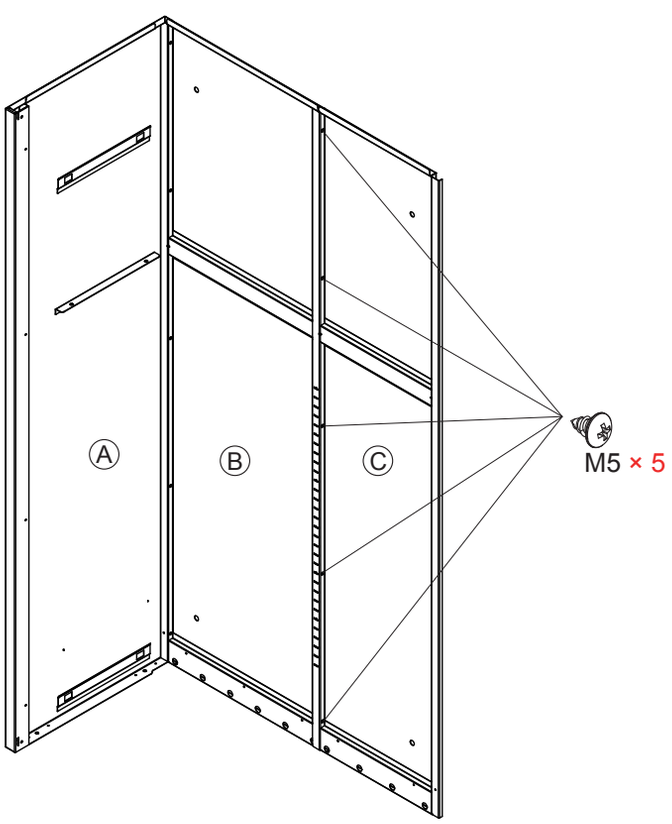

Step 2

Connect Ⓑ and Ⓒ together using five M5 screws.

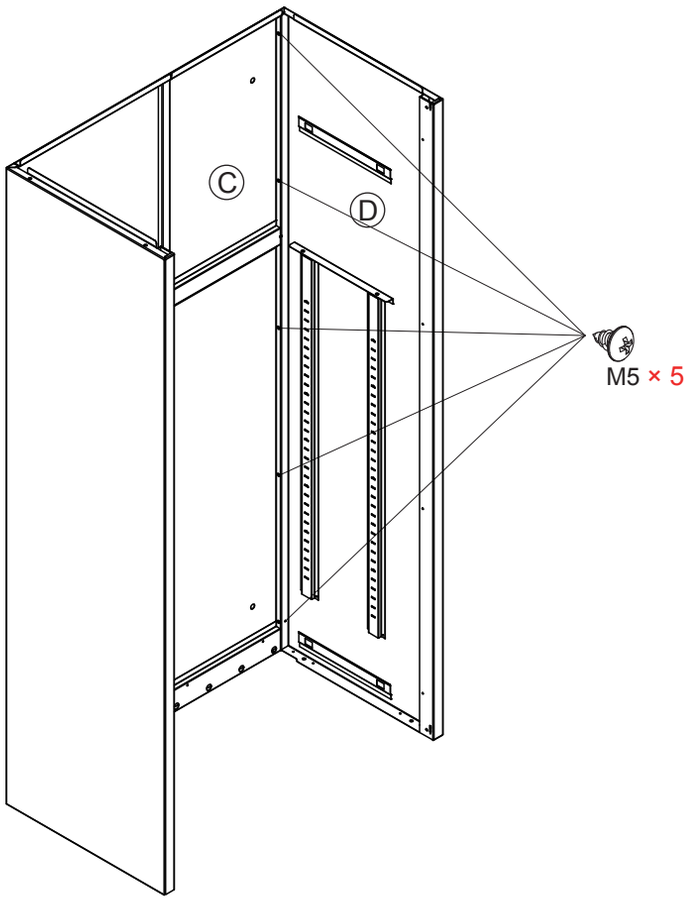

Step 3

Connect Ⓒ and Ⓓ together using five M5 screws.

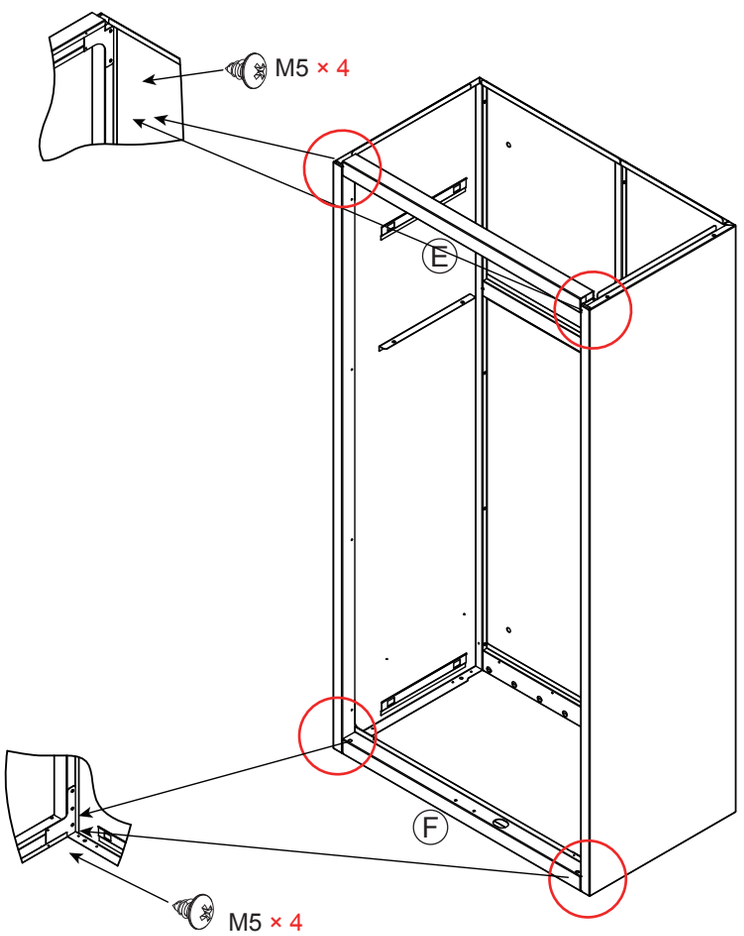

Step 4

Place Ⓔ and Ⓕ as shown in the diagram and secure them from the inside with eight M5 screws.

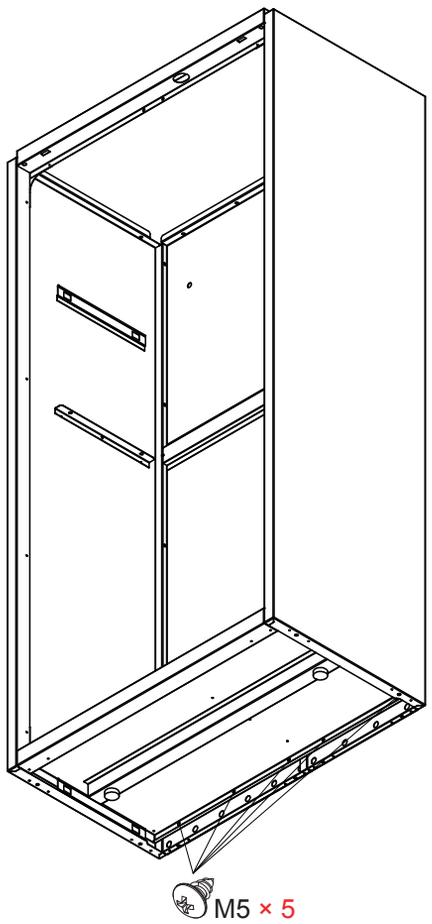

Step 5

Place an H-plate at the bottom, flatten the assembled section, and secure it from the outside with five M5 screws.

Note: Please lay the cabinet flat and adjust the legs to be flush with the surrounding area to increase the cabinet's load-bearing capacity.

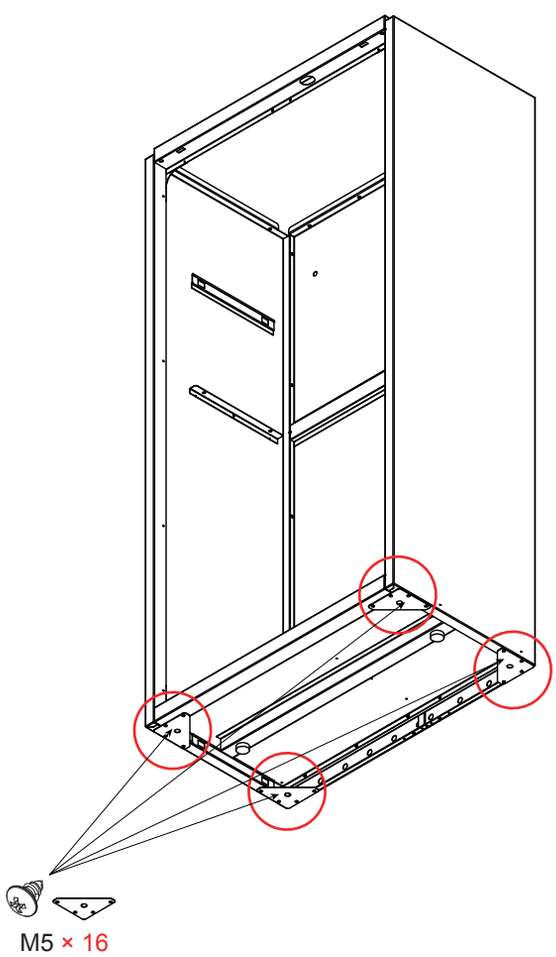

Step 6

Place Ⓔ and Ⓕ as shown in the diagram and secure them from the inside with sixteen M5 screws.

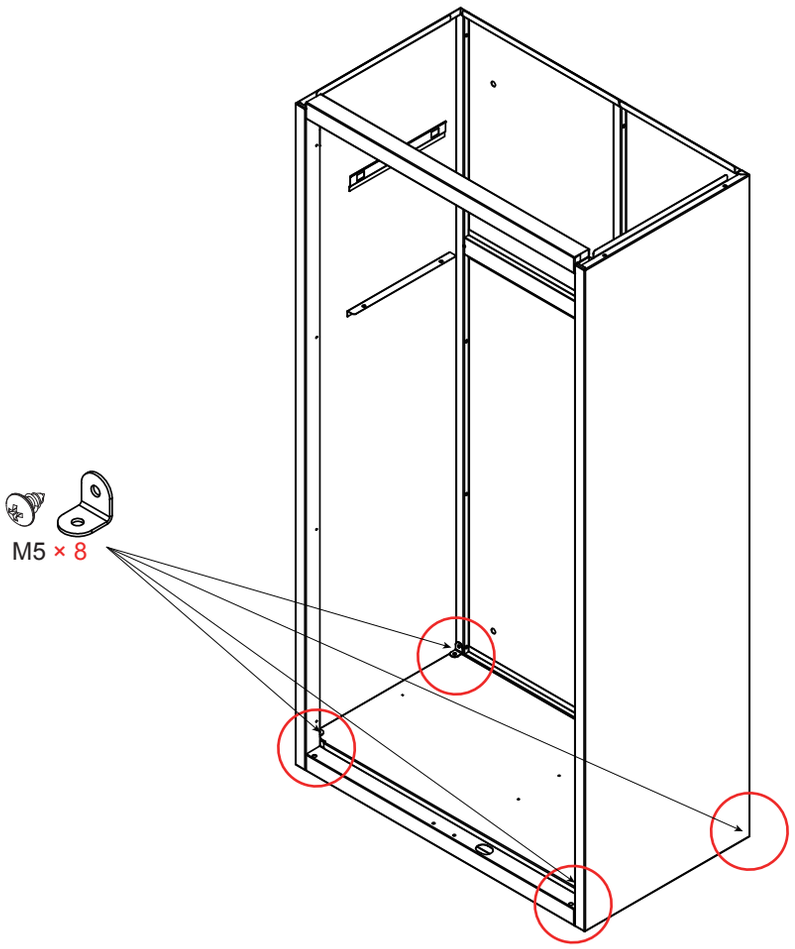

Step 7

Eight holes are pre-drilled at each of the four corners on the inside of the base plate. As shown in the figure, the base plate is fixed with eight M5 screws and four L-shaped metal plates.

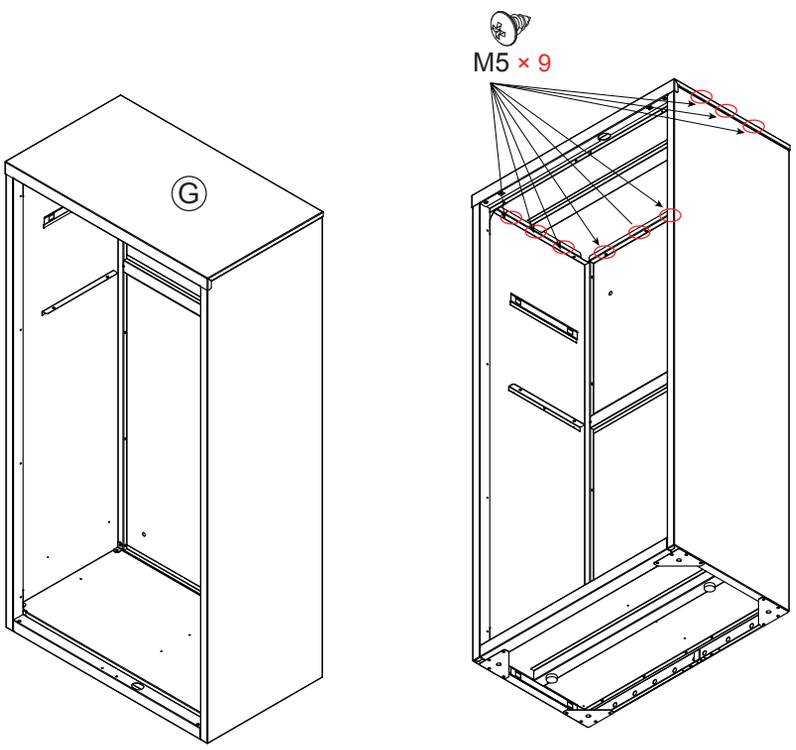

Step 8

① Insert the Ⓖtop plate from front to back, placing it on top of the assembled part.

② Secure it from the inside with nine M5 screws.

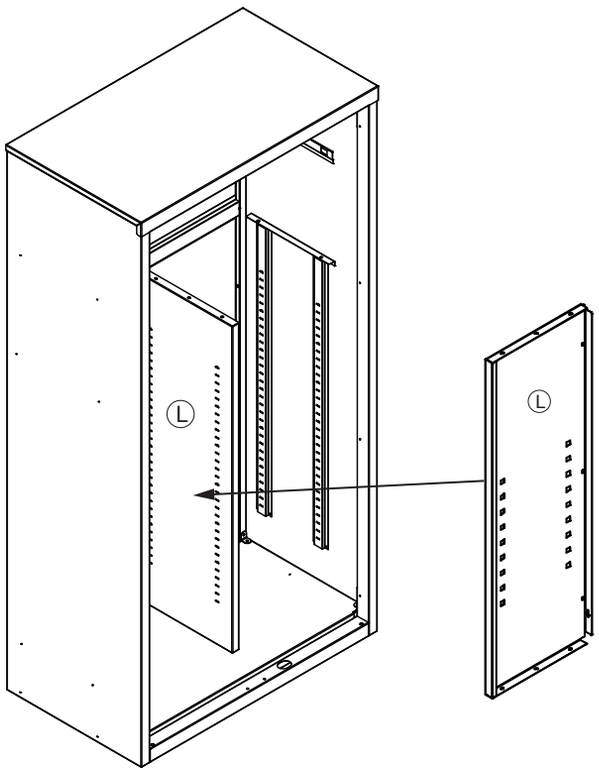

Step 9

Place Ⓛ inside the assembled box.

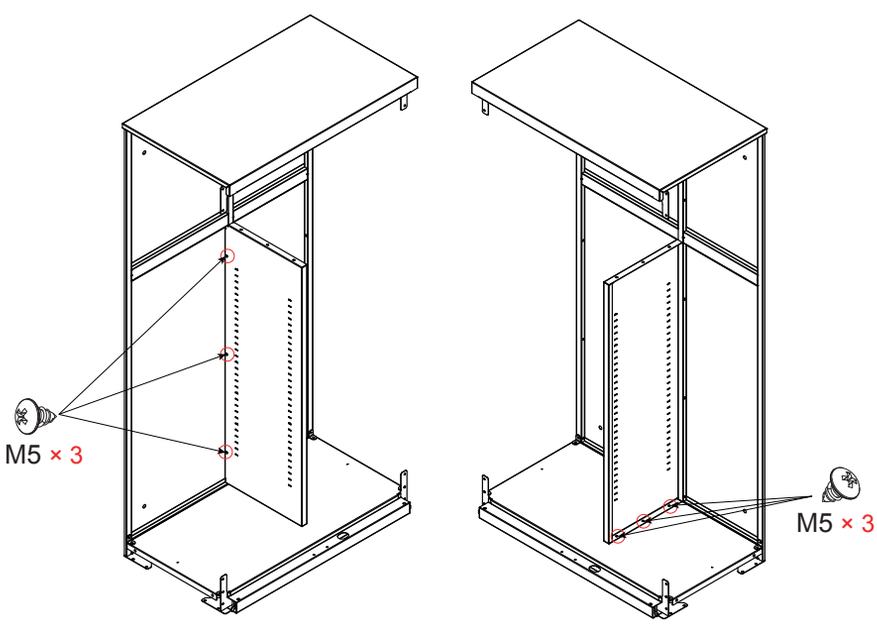

Step 10

① Secure Ⓛ to the pre-drilled holes on the back using three M5 screws, and tighten the screws.

② Secure Ⓛ to the pre-drilled holes on the base plate using three M5 screws, and tighten the screws.

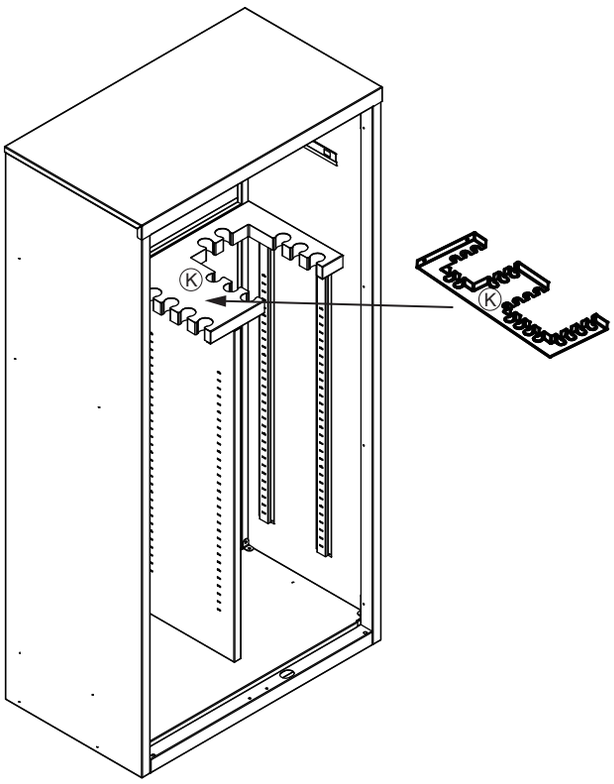

Step 11

Place K in the assembled internal position.

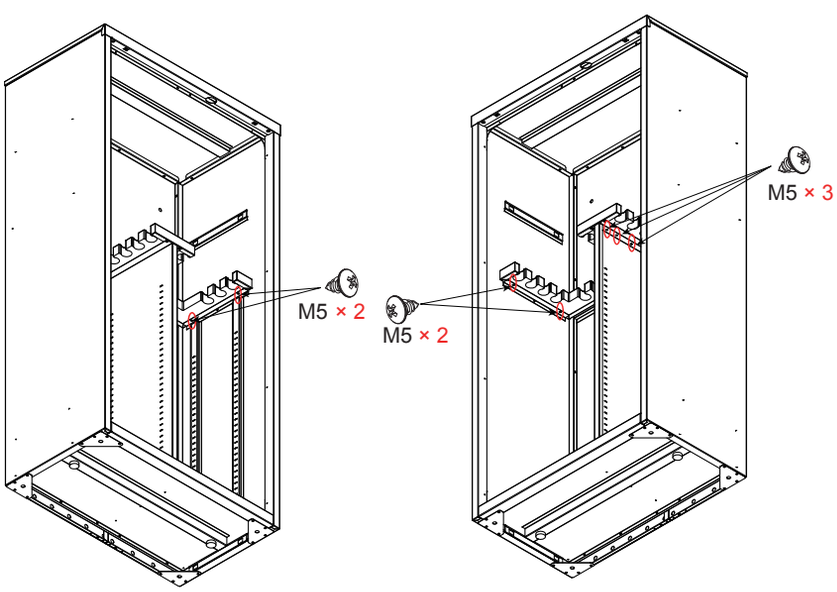

Step 12

Secure Ⓚ to the left side panel, the middle vertical panel, and the right side panel using seven M5 screws

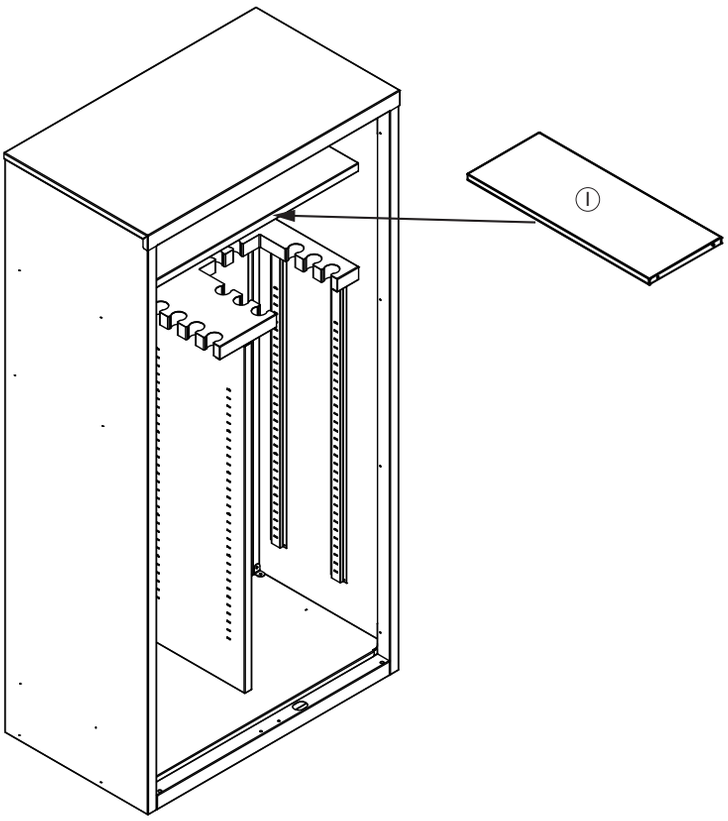

Step 13

Simply place Ⓘ onto the pre-installed bracket.

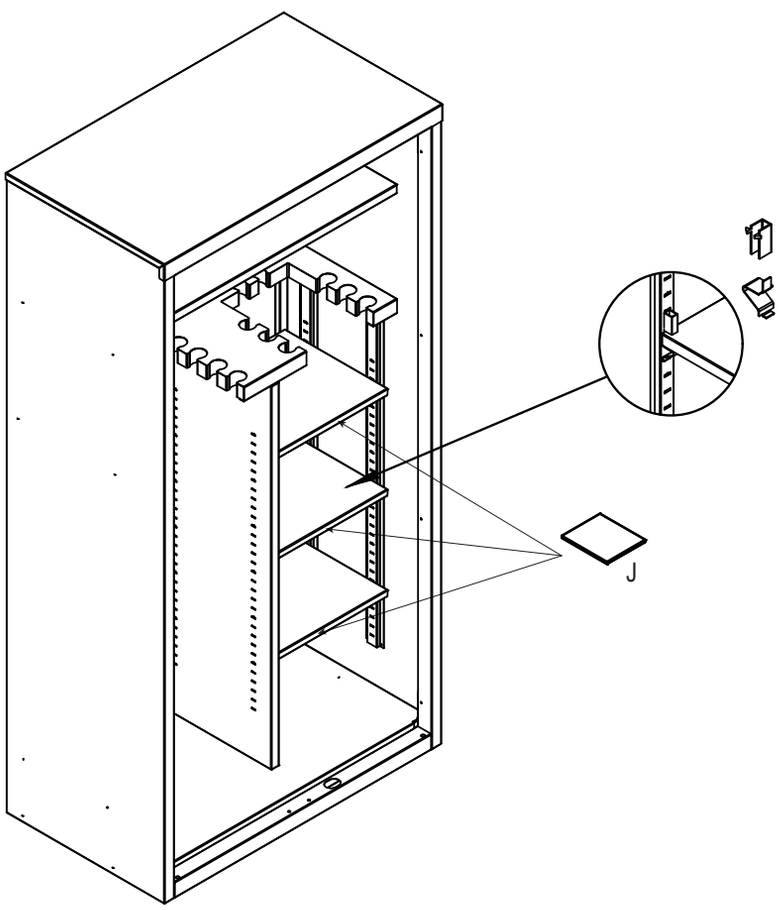

Step 14

When installing Ⓙ on the inside right side, it can be fixed with fourupper and lower clips on both sides as needed.

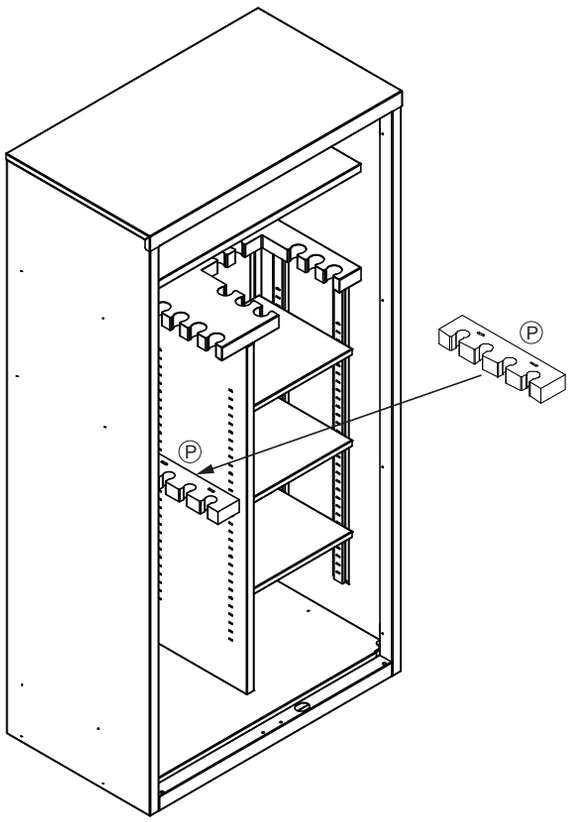

Step 15

Ⓟcan be placed anywhere inside.

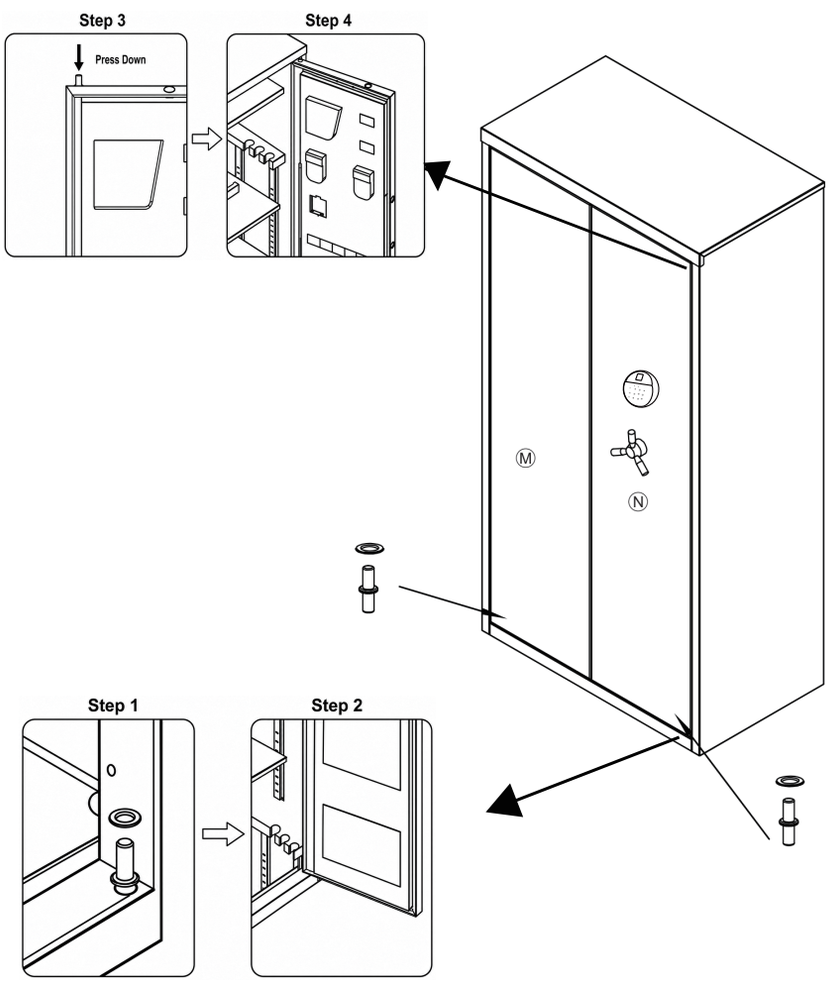

Step 16

① Place the washer above the door hinge, align the bottom end of the door hinge with the corresponding bottom hinge hole on the base plate, and then place Ⓜ on the installed door hinge.

② Tilt the door panel slightly (approximately 10°-15°), and press firmly with your finger into the spring mechanism inside the upper left hinge hole of Ⓜ. Align it with the pre-drilled hole in the top plate and slowly release the spring tension—installation complete.

③ Install Ⓝ using the same steps.

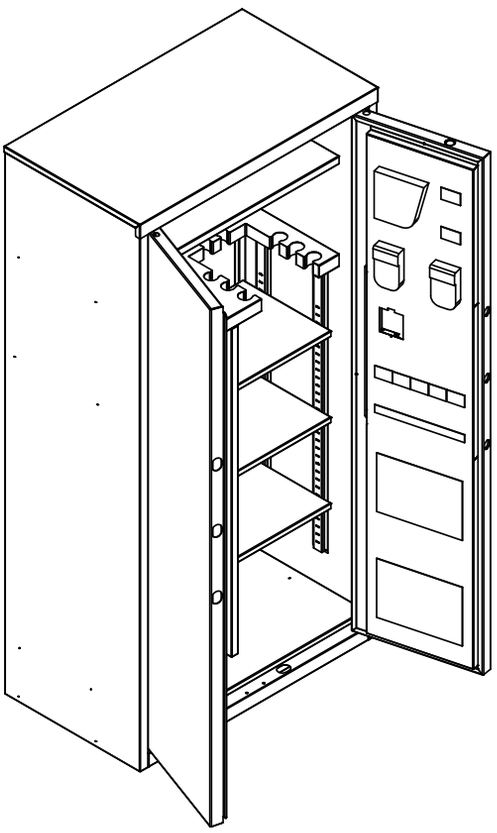

Step 17

Installation complete.

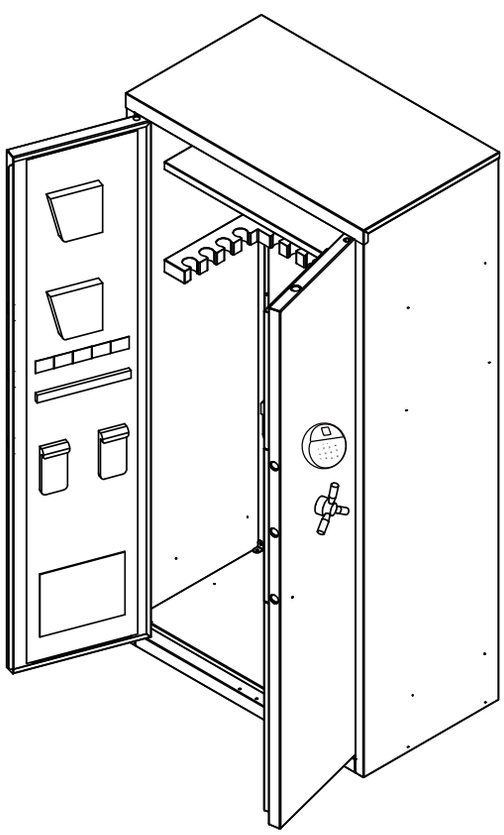

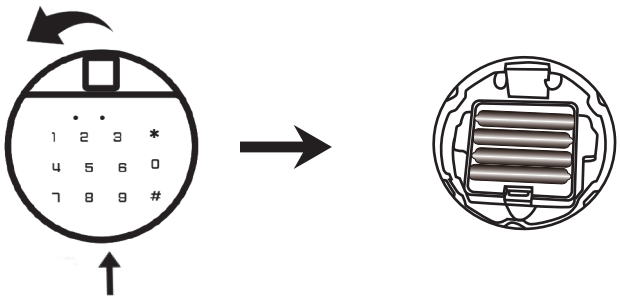

First opening

1. Flip the switch on the bottom housing of the electronic lock and turn the housing counterclockwise to open.
2. Open the battery cover inside the battery lock and insert 4 AAA alkaline batteries.
3. Insert the emergency key into the keyhole and turn it clockwise or enter the Initial administrator password "123456" on the electronic lock.
4. Turn the handle clockwise to open the gun cabinet.

CAUTION:

1. Please do not use rechargeable batteries.
2. Please do not use different brands of batteries, the current is different, which may burn the panel.
3. If the panel is not powered after installing the battery, please check if the battery is low.

Setting the Administrator Password

Open the safe door and touch the touchscreen to activate it. Press "00", then press the green button inside the safe. Enter the new password(3–12 digits)and press "#" to complete

CAUTION:

1.Default administrator password: 123456.
2.The administrator password should be set immediately after receiving the safe.
3.This is the primary password for the safe.

Setting the Regular User Password

Open the safe door and touch the touchscreen to activate it. Press "11", then press the green button inside the safe. Enter the new password(3–12 digits)and press "#" to complete.

CAUTION:

1.There is no default user password.
2.It does not replace the administrator password.
3.You may choose to use only the administrator password if a second password is not needed.

Set the Fingerprint code

With the door open, briefly press the green button inside the safe. You will hear two short beeps, and the setup indicator will light up. Now, capture your fingerprint four times on the fingerprint reader. After hearing two beeps, followed by a long beep, your fingerprint has been successfully enrolled. (If you hear three short beeps, beeps, beeps, enrolling failed.) Continue this process to enroll more fingerprints.

CAUTION: You can enroll up to 30 fingerprints.

Open the safe

1. Touch the touchscreen to wake it up. Enter your pre-set 3-12-digit password or use a registered finger-print for verification.
2. If recognition is successful, you'll hear a long beep, the electromagnet will engage, and the panel will display the lock status as unlocked.
3. If the blue light blinks and the buzzer sounds four times, it means the password input is incorrect; please re-enter.

Deleting fingerprints and passwords

With the door open, press and hold the green button inside the safe for about 5 seconds. A long beep indicates that all fingerprints and passwords have been successfully deleted, restoring the device to factory settings. Unable to open the device with any fingerprint.

CAUTION:

1. The * key is the delete key, pressing it once clears the entire inputted password.
2. The # key serves as the confirmation key.

Auto-Lock on Incorrect Password

1. If the password is incorrect for 3 times or the fingerprint is incorrect for 5 times, the system will automatically lock for 3 minutes.
2. During the lock period, all operations are invalid. After the lock time expires, the safe can be opened with the correct password. In case of emergency, you can use the emergency key to open the safe during the lock period.

Silent Mode

Touch the touch screen to wake up, enter "11#" to turn on or off the silent mode.

Alarm Function

1. In standby mode, touch the touchscreen to wake it up. Press the * key. You'll hear a beep and the number keys will turn off, indicating the safe is in armed mode. The alarm will sound when the safe vibrates. After the alarm sounds, enter your fingerprint or password correctly. The alarm will automatically disarm. If you do not enter a correct fingerprint, the alarm will stop after 30 seconds, but the alarm mode will not be disarmed.
2. If you enter your password incorrectly three times or your fingerprint incorrectly five times or more, the alarm will sound for 30 seconds.

Other

1. The system uses four 1.5V alkaline batteries. If the voltage is insufficient, the buzzer will sound "beep, beep, beep" and "beep, beep, beep" twice after the door is opened to remind the user to replace the batteries in time.
2. If the battery voltage is insufficient, the emergency key can be used tooperate.
3. Hold dow the setting key for 5 seconds, the buzzer plays a piece of music, and the system restores the initial Settings.

Security and compliance

1. In order to reduce the risk, the gun cabinet is best installed on the wall to ensure safety.

2. Please keep the emergency keys carefully. Do not put the key in the gun cabinet, otherwise when the battery is exhausted, the emergency key will not be able to open the safe.

3. In order to ensure the safety of your property, you need to change the original factory password.

4. Do not place the product on unsafe elevated racks to avoid falling, damaging the product or injuring people.

5. Do not spill liquid on the control panel, otherwise it may cause electric shock to the internal electronic components and affect its normal operation.

6. Do not disassemble the product by yourself. Unguided disassembly and improper assembly of the gun cabinet may damage the circuit and affect its performance.

7. All pictures in the manual are subject to the actual object.

8. Please note that the +5 pin must be aligned with thearrow as shown in the image! The LED strip must be connected as shown in the image; otherwise,it will not light up properly!

