IMPORTANT NOTICE

Hanging Instructions for Mirrors with Strap Hangers

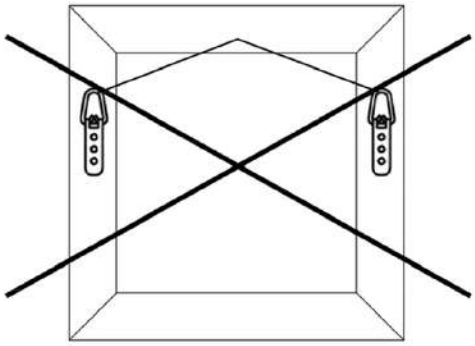

Do NOT hang mirror by picture wire or chain

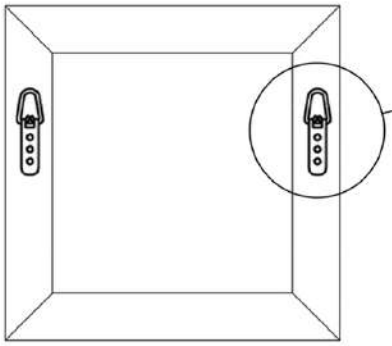

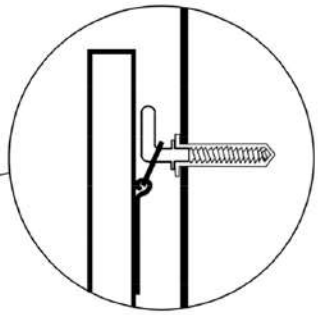

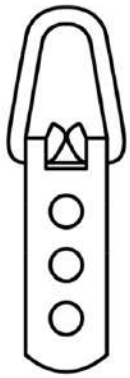

Strap Hanger

Hang by the two strap hangers directly onto adequate hooks securely fixed to the wall.

Never hang a mirror on damp wall as the backboard of the mirror will distort and possibly also cause damage to the mirror itself.

If in any doubt consult a competent Installation Specialist.