Product installation manul

Product: Universal ceiling lamp

1. Use self tapping screws to attach the panel tothe ceiling 。

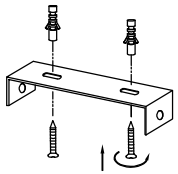

2. Connect the power correctly

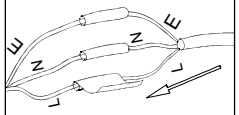

3. Cross the lamp body through the plate screw and fasten it with a nut

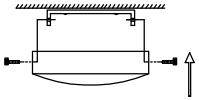

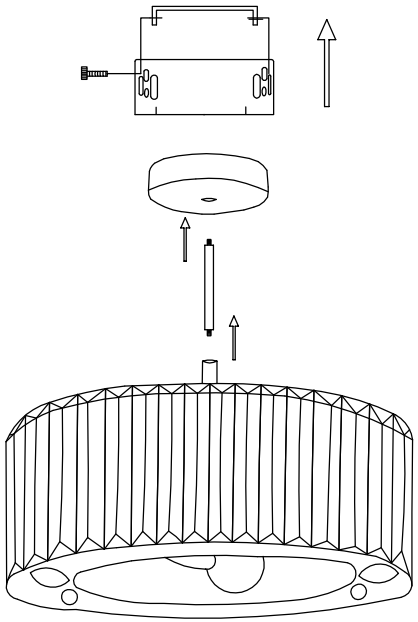

⚠:

1. Please ask professional to install.
2. Please wear protective gloves during installation to keep the lamp clean.
3. Please install the lamp body in a dry place,not in a wet place.
4. Please cut off the power supply before installing,so as to prevent human body from electric shock.

Product installation manul

Product: Universal ceiling lamp

1. Use self tapping screws to attach the panel tothe ceiling 。

2. Connect the power correctly

3. Cross the lamp body through the plate screw and fasten it with a nut

⚠:

1. Please ask professional to install.
2. Please wear protective gloves during installation to keep the lamp clean.
3. Please install the lamp body in a dry place,not in a wet place.
4. Please cut off the power supply before installing,so as to prevent human body from electric shock.

