ASSEMBLY INSTRUCTIONS

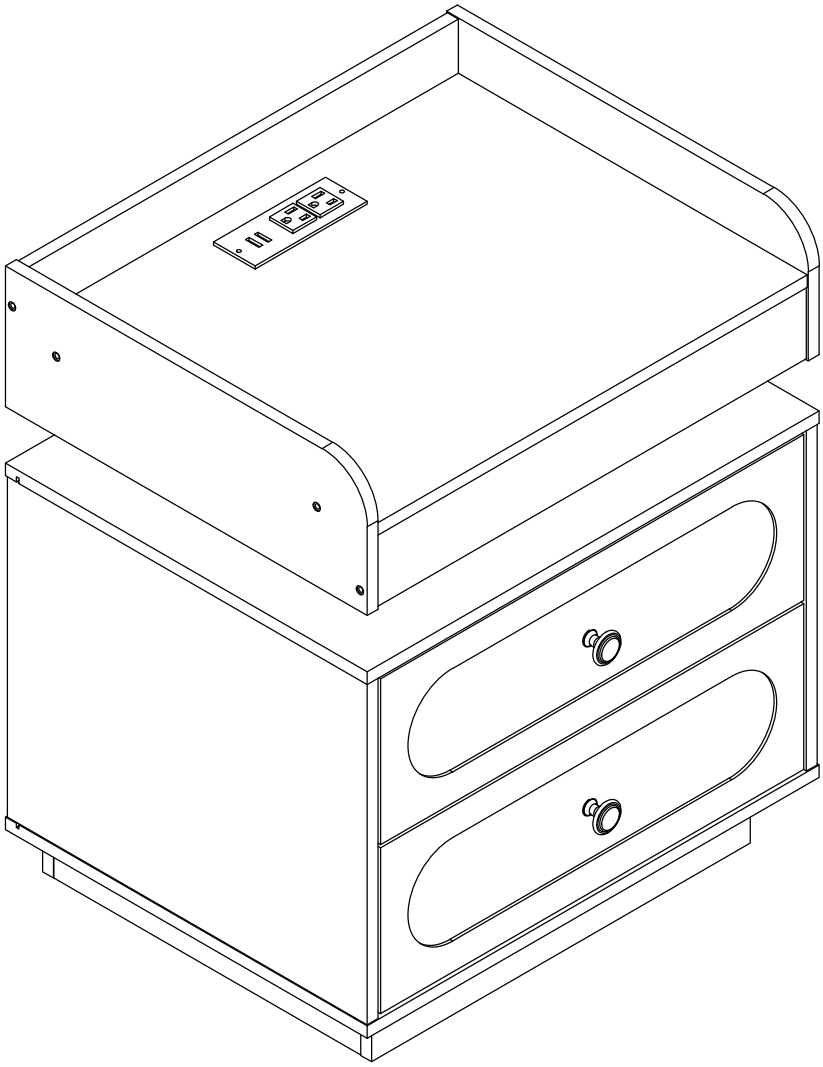

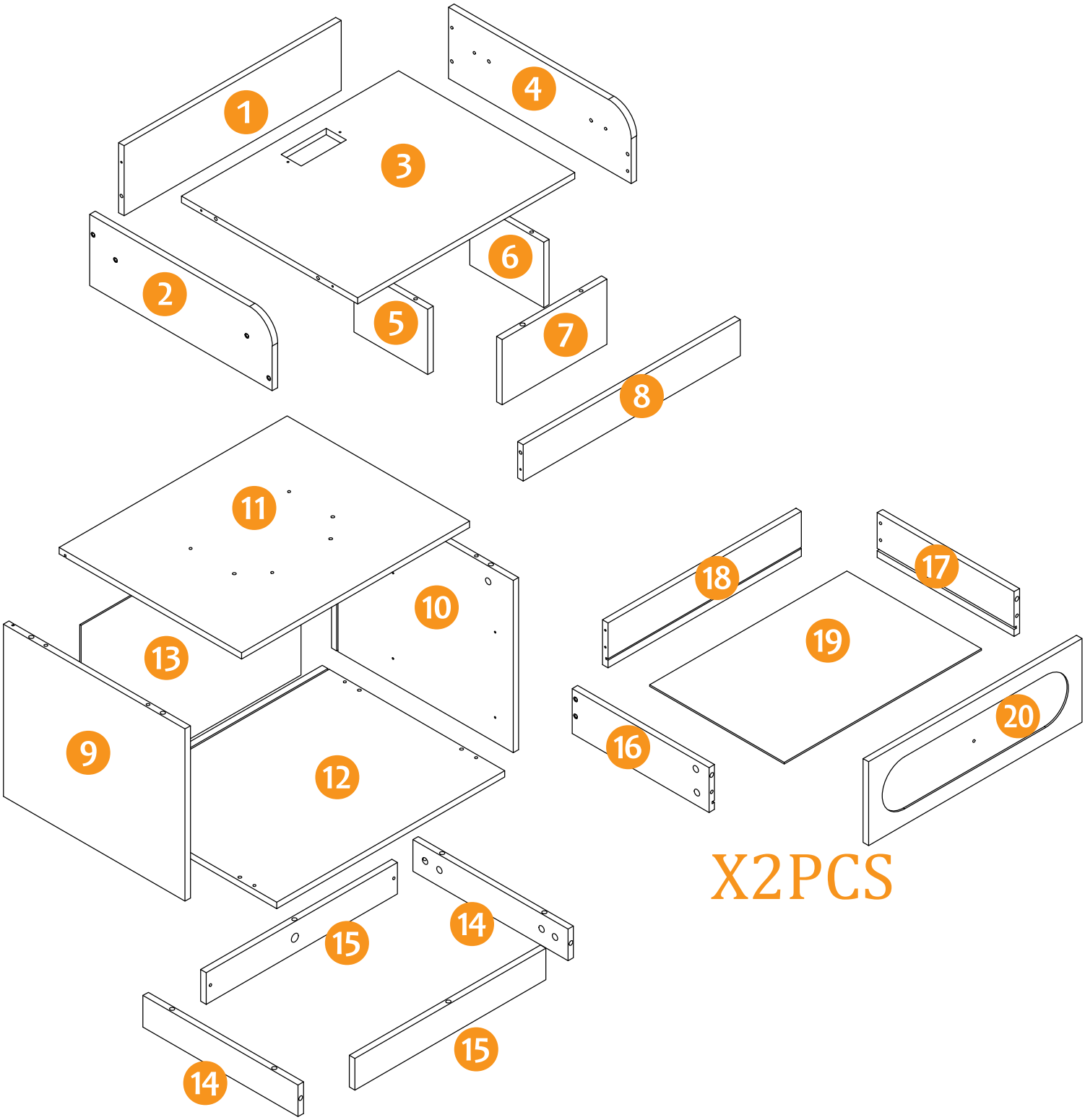
1
2
3
4
5
6
7
8
9
10
11
12
13
14
15
14
15
16
17
18
19
20
X2PCS

Trouble Shooting

Missing/Damaged pieces/
Wrong size and installation issues

↓

Contact us with your problem,pic, number and qty to the "Contact seller" button in the detail page of your order

↓

Respond with 24 hours to solve issue

Before You Start

1.Read through each step carefully and follow the proper order

2.Separate and count all your parts and hardware

3.Give yourself enough room for the assembly process

4.Caution: If using a power drill or power screwdriver for screwing, please be aware to slow down and stop when screw is tight. Failure to do so may result in stripping the screw

Cam Lock Fastening System

This Cam Lock Fastening System willl be used throughout theassembly process

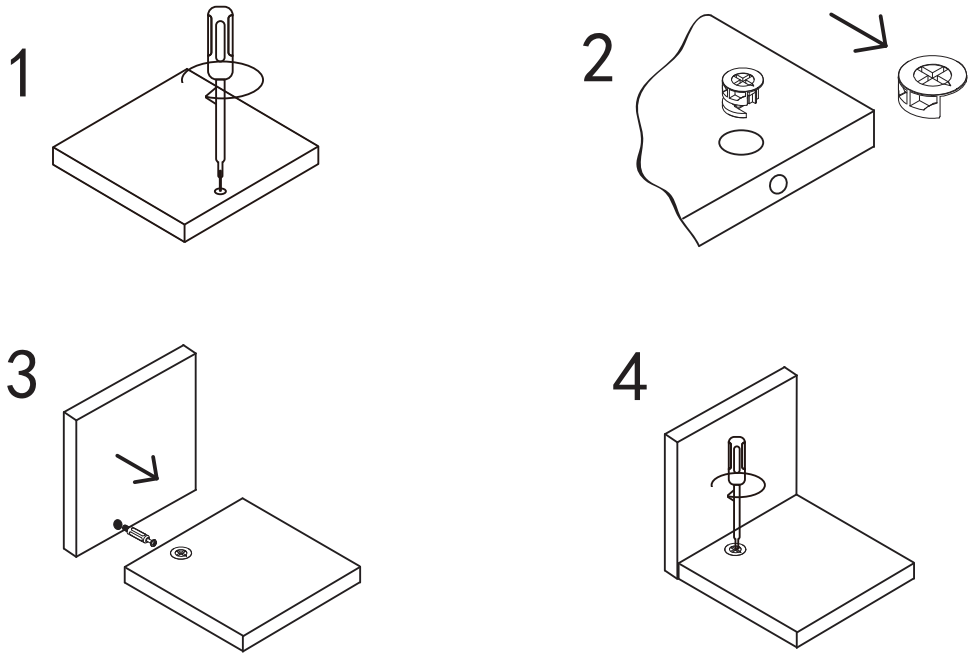

Parts List

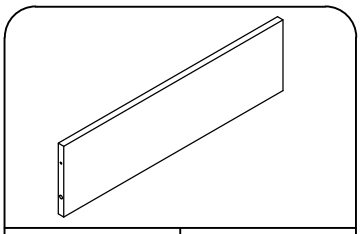

1	1PC

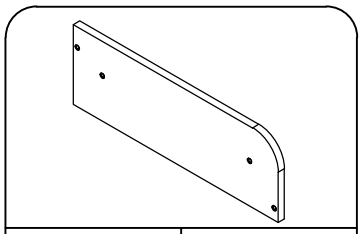

2	1PC

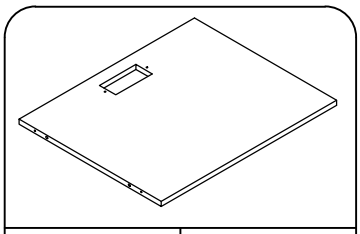

3	1PC

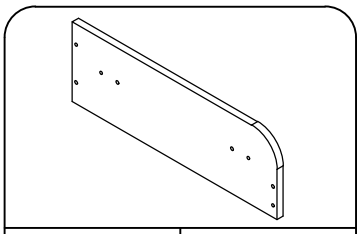

4	1PC

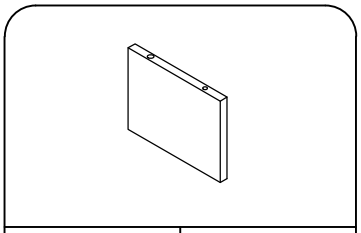

5	1PC

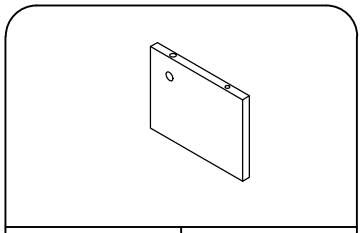

6	1PC

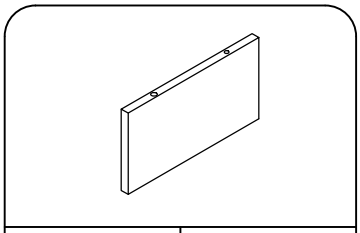

7	1PC

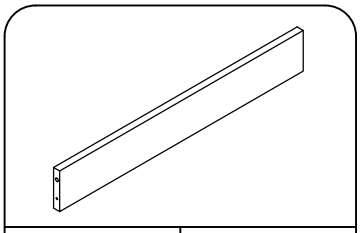

8	1PC

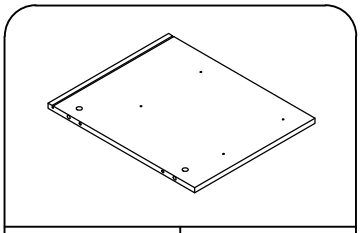

9	1PC

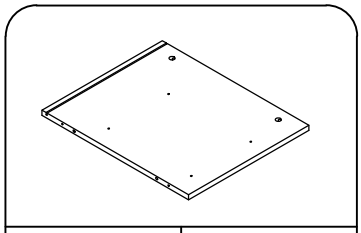

10	1PC

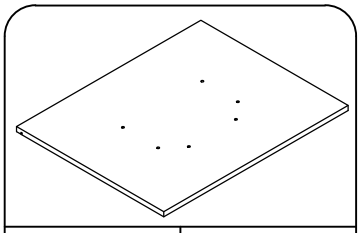

11	1PC

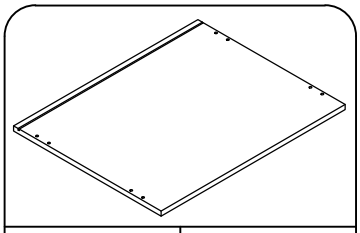

12	1PC

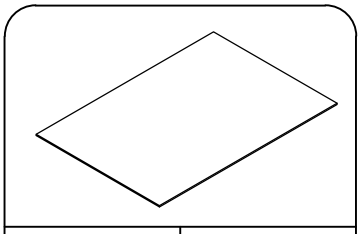

13	1PC

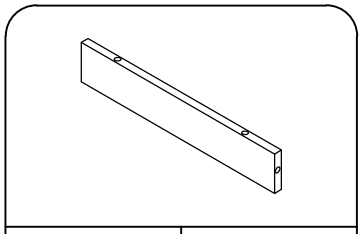

14	2PCS

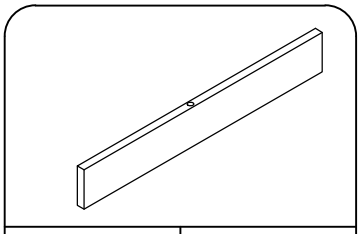

15	2PCS

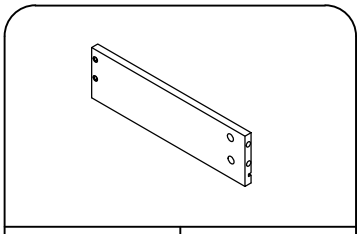

16	2PCS

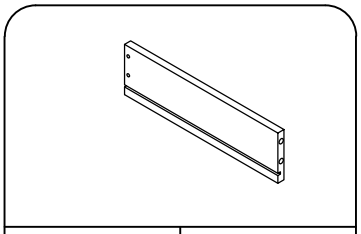

17	2PCS

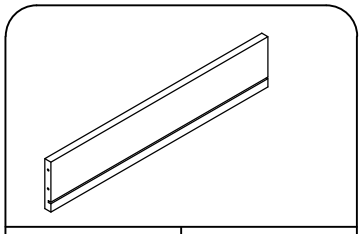

18	2PCS

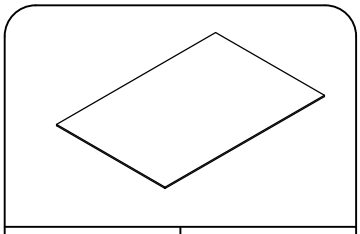

19	2PCS

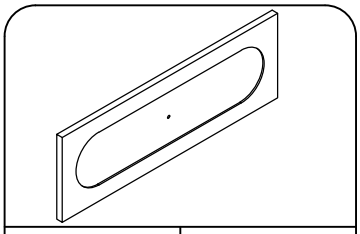

20	2PCS

Hardware List

A	25PCS
B (ϕ12)	25PCS
C (Ø6*30mm)	22PCS
D (Ø4*40mm)	23PCS
E	2PCS
F (M4*16mm)	2PCS
G (ϕ3*12mm)	16PCS
H	1PC
I (L)	2PCS
J (R)	2PCS
K (L)	2PCS
L (R)	2PCS
M	4PCS
N (ϕ3*14mm)	4PCS
O (ϕ3*14mm)	2PCS
P (Hole Patch)	8PCS
Q	1PC

STEP 1

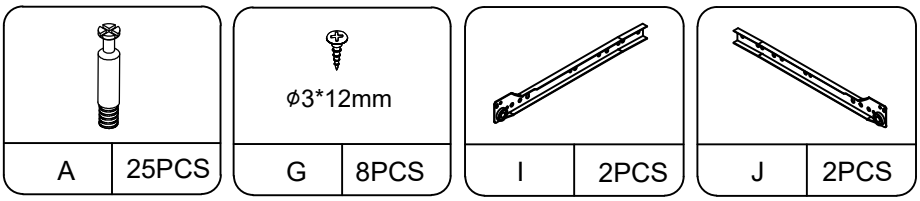
A
25PCS
ϕ3*12mm
G
8PCS
I
2PCS
J
2PCS

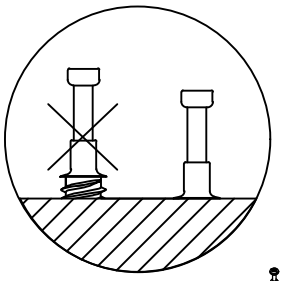

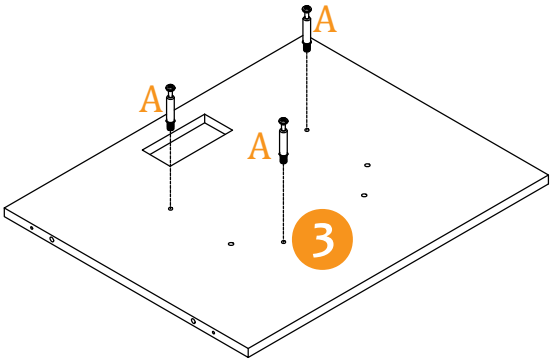
A
A
A
3

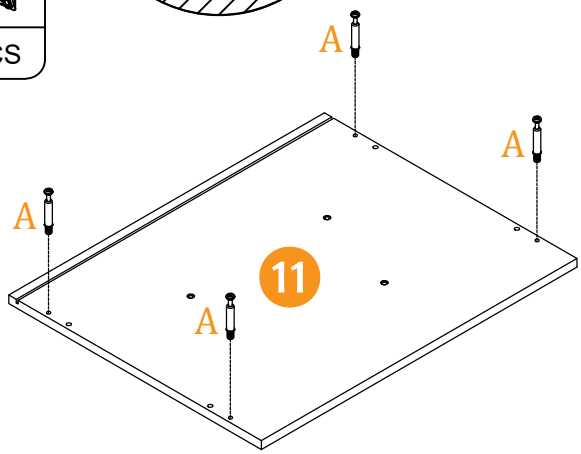
A
A
A
A
11

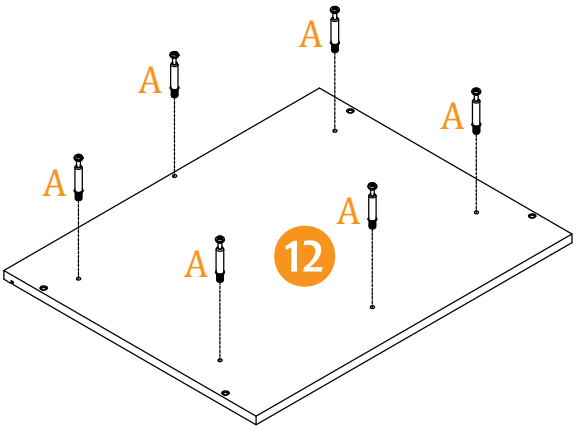
A
A
A
A
A
A
12

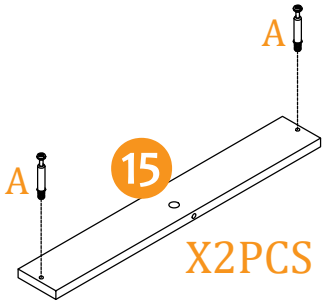
A
A
15
X2PCS

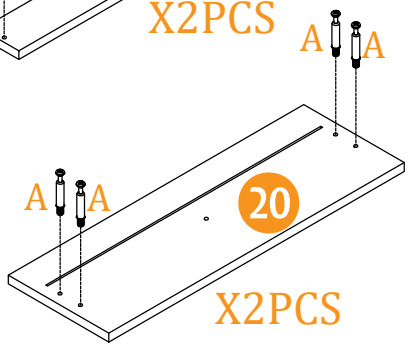
A
A
A
A
20
X2PCS

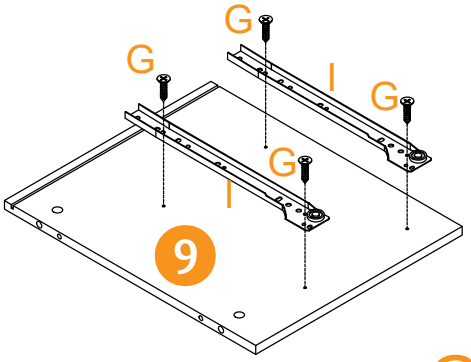
G
G
I
G
G
I
9

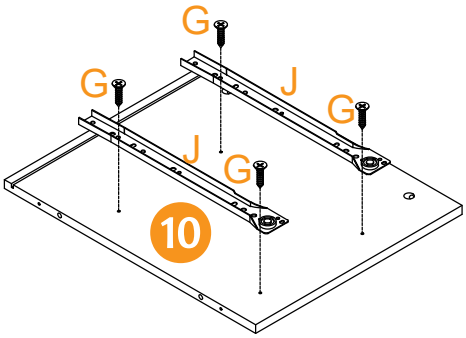
G
G
J
G
J
G
10

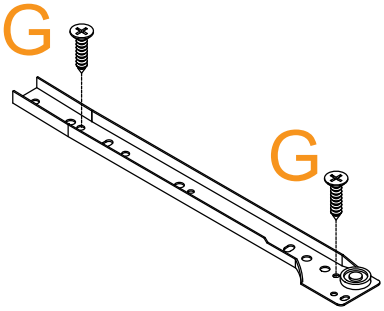
G
G

STEP 2

ϕ12	
B	3PCS

Ø6*30mm	
C	3PCS

STEP3

ϕ12	
B	4PCS

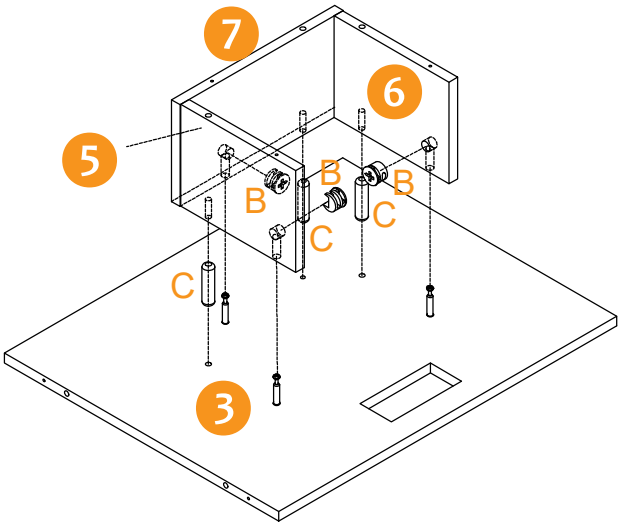

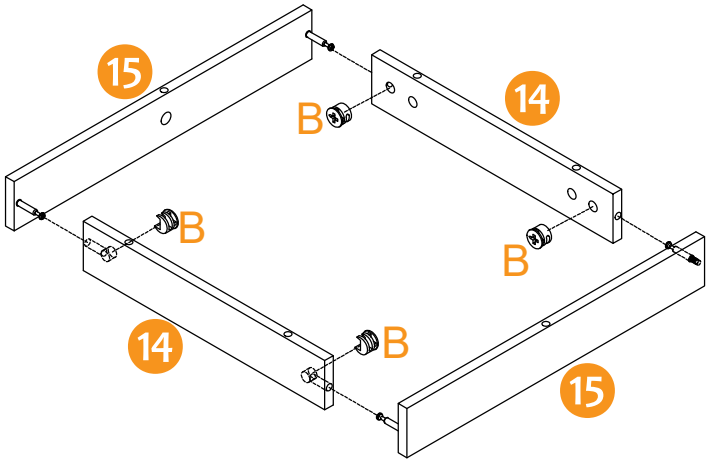

STEP 4

Ø6*30mm	
C	8PCS

Ø4*40mm	
D	8PCS

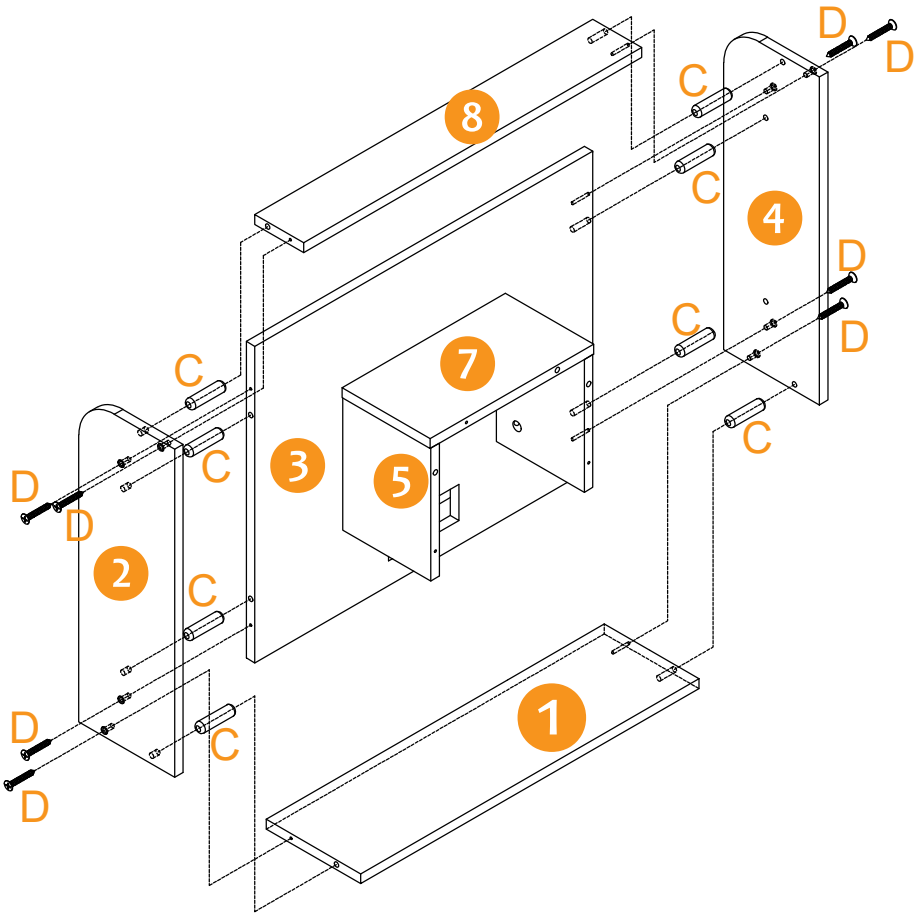

STEP 5

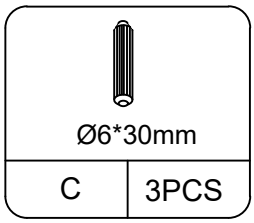

C	3PCS

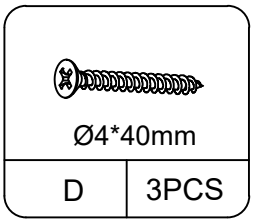

D	3PCS

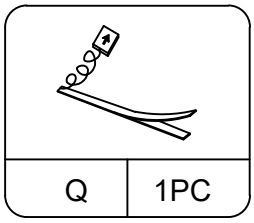

Q	1PC

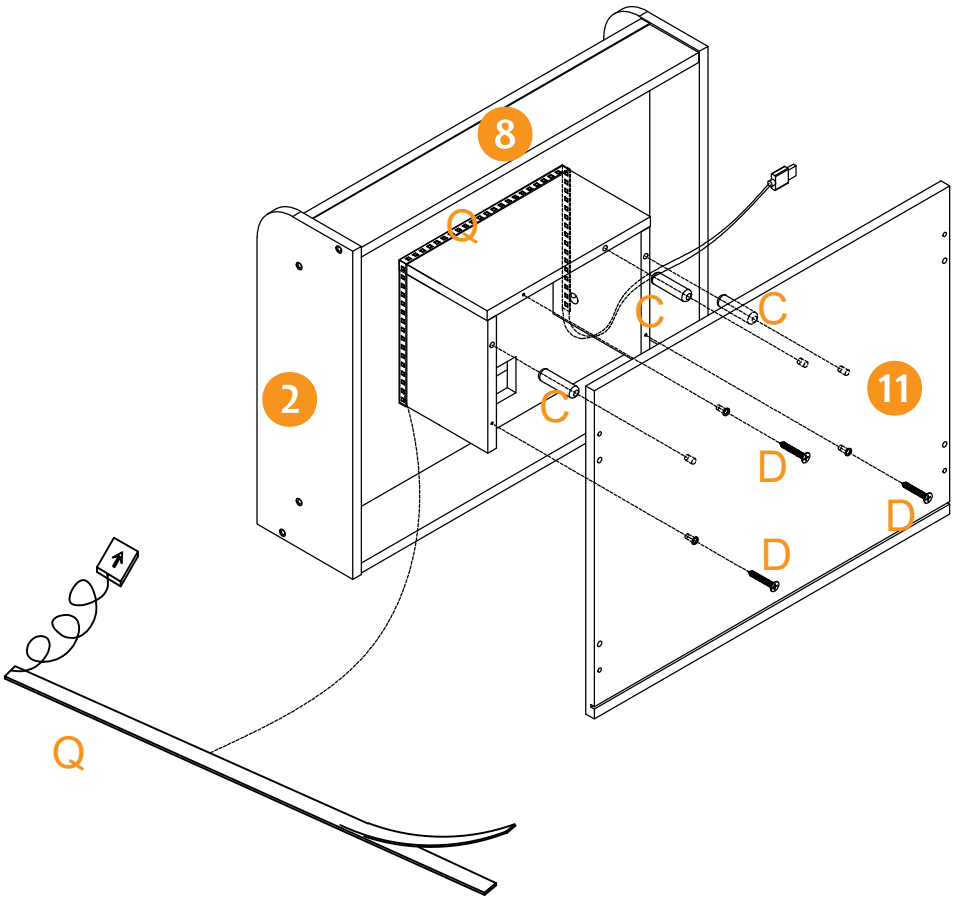

STEP 6

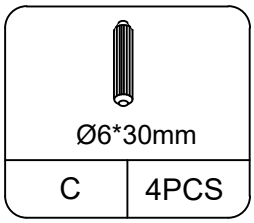

C	4PCS

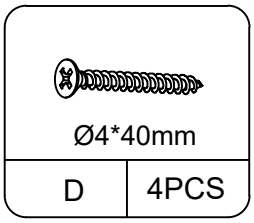

D	4PCS

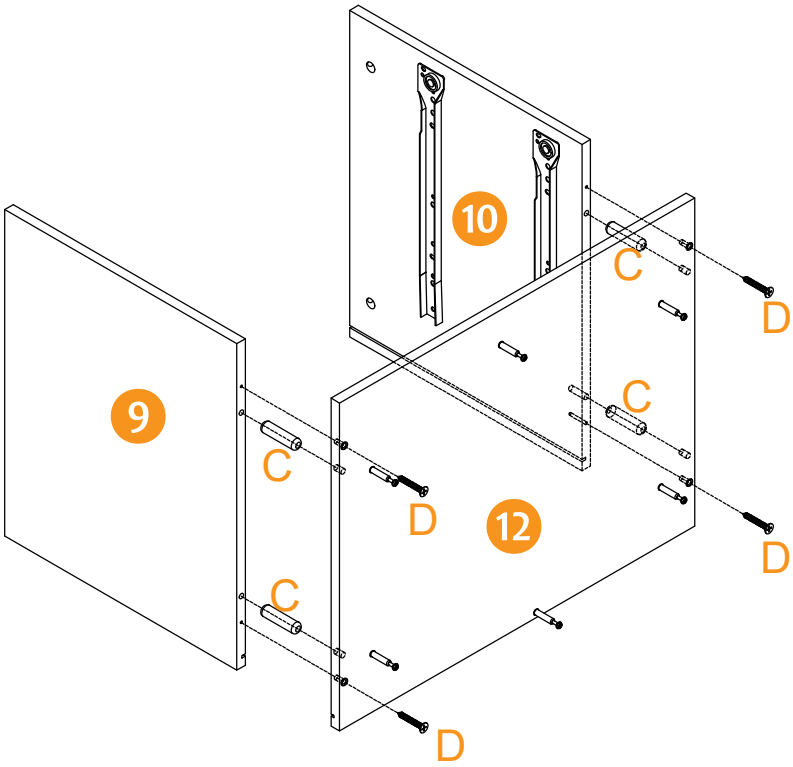

STEP 7

ϕ12

B	6PCS

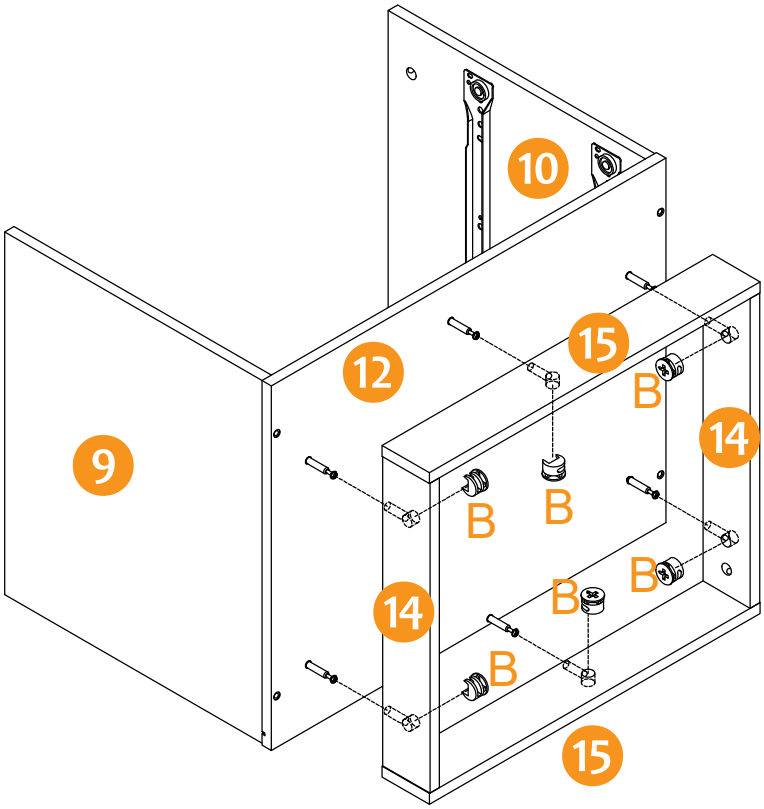

STEP 8

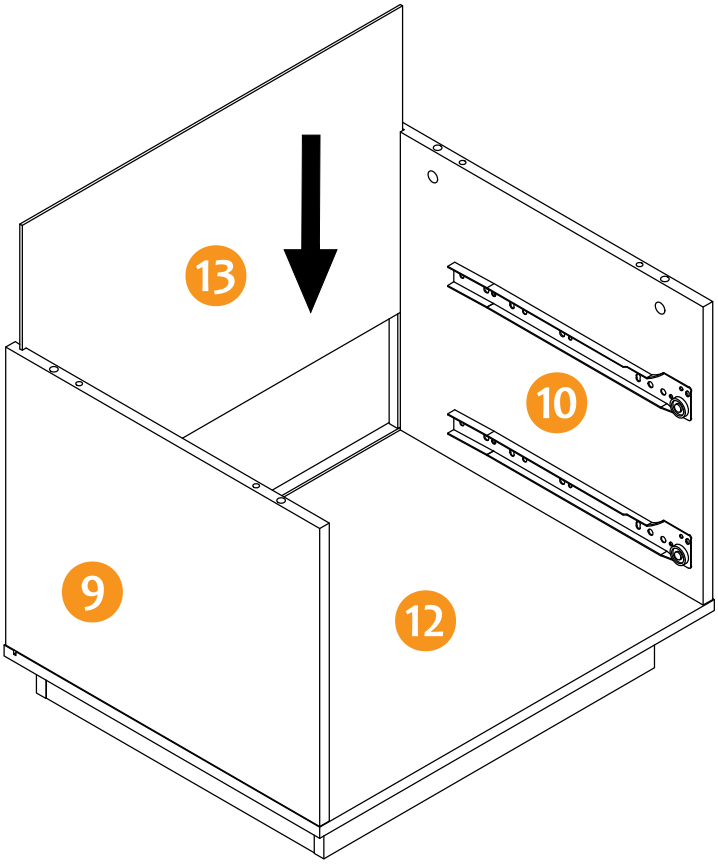

STEP 9

ϕ12

B	4PCS

Ø6*30mm

C	4PCS

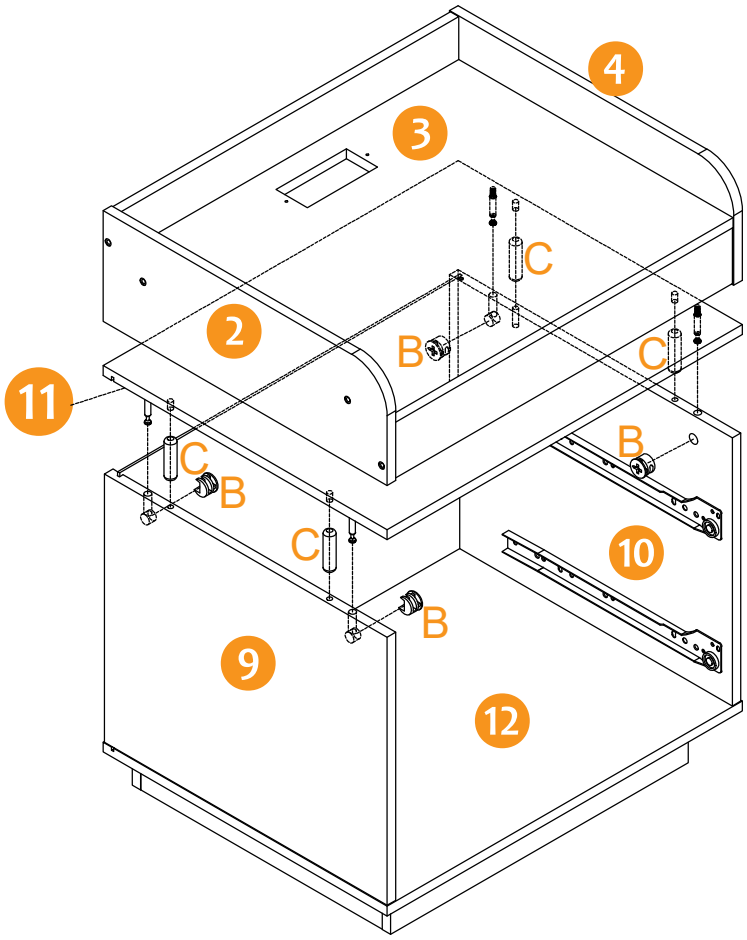

STEP 10

Ø4*40mm

D	8PCS

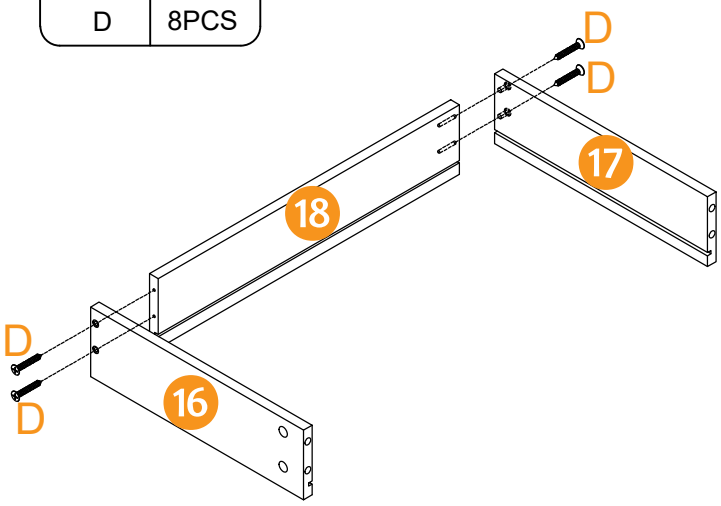

X2PCS

STEP 11

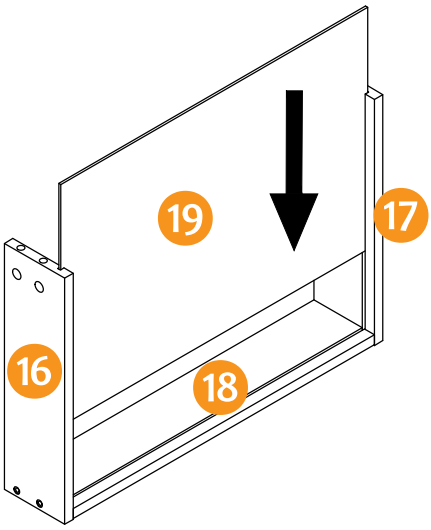

X2PCS

STEP 12

ϕ12

B	8PCS

E	2PCS

M4*16mm

F	2PCS

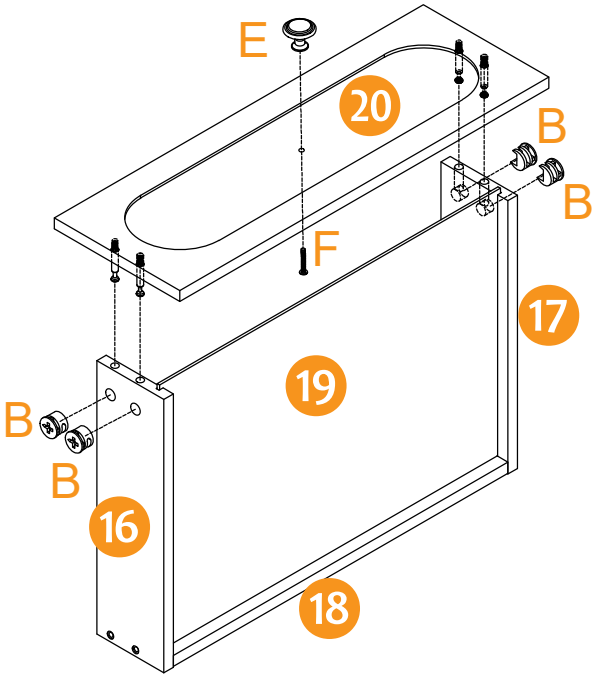

X2PCS

STEP 13

ϕ3*12mm

G	8PCS

K	2PCS

L	2PCS

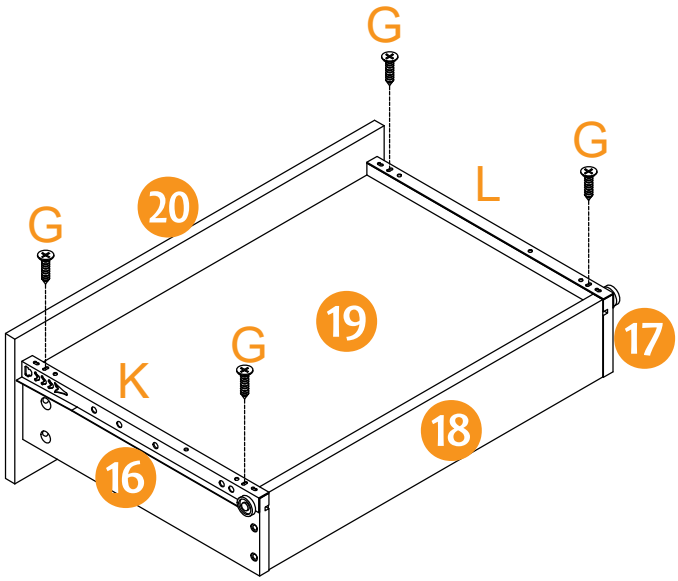

X2PCS

STEP 14

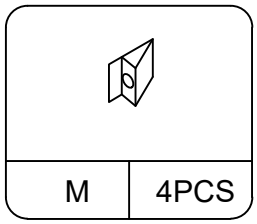

M	4PCS

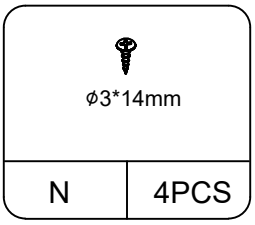

N	4PCS

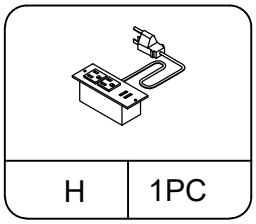

H	1PC

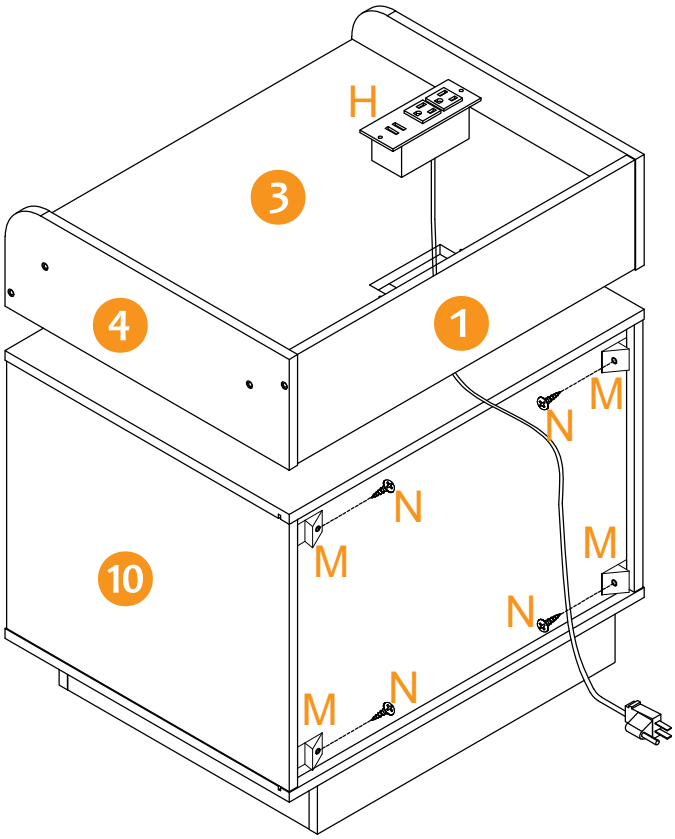

STEP 15

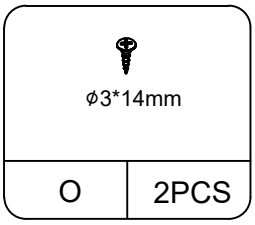

O	2PCS

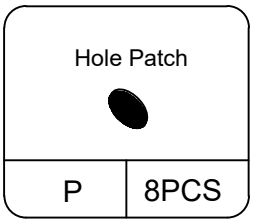
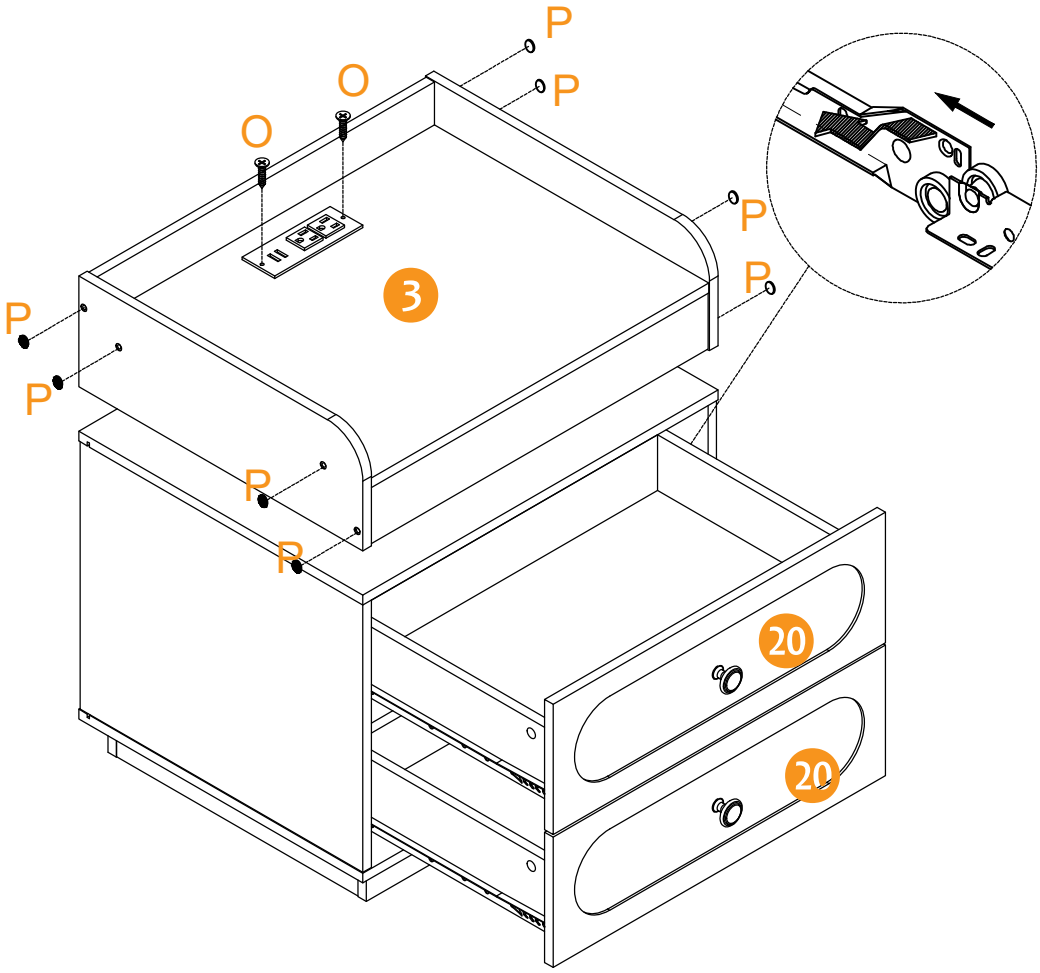
P	8PCS