Compact Refrigerator

User Manual

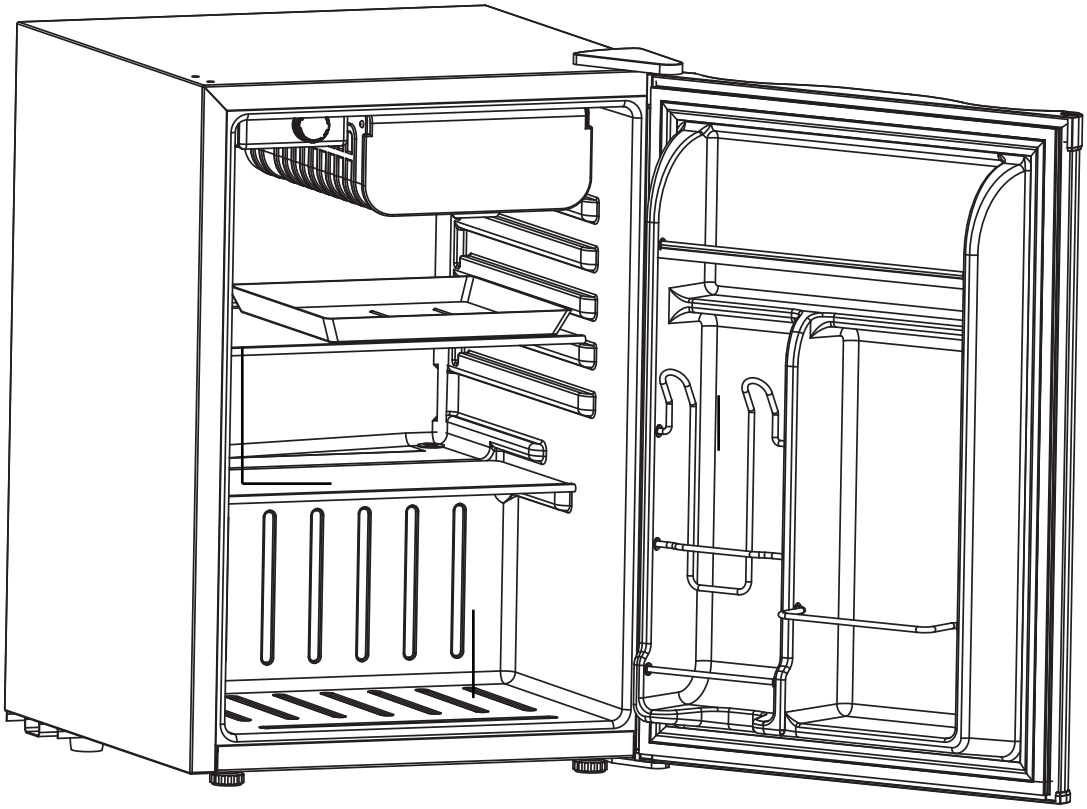

Model No.:BC-70-E

It is important that you read these instructions before using your portable refrigerator and we strongly recommend that you keep them in a safe place for future reference.

Scan the QR code to watch the product videos

Email: service@electacticshop.com

Web: www.electacticshop.com

Tel: 888-698-2504

Table Of Contents

PAGE

Safety Precautions **1**

Parts And Features **3**

Installing Your Refrigerator **4**
Unpacking Your Refrigerator **4**
Leveling Your Refrigerator **4**
Proper Air Circulation **4**
Electrical Requirements **4**
Use of Extension Cord **5**
Installation Limitations **5**
Door Reversal **6**
Door Alignment **7**

Refrigerator Features And Use **8**
Adjustable Temperature Dial **8**
Refrigerator Interior Shelves **8**
Dispense-A-Can™ **9**
Food Storage Information **10**
Normal Operating Sounds **11**

Proper Refrigerator Care and Cleaning **11**
Cleaning and Maintenance **11**
Defrosting **12**
Power Interruptions **13**
Vacation and Moving Care **13**
Energy Saving Tips **13**

Troubleshooting **14**

SAFETY PRECAUTIONS

Read all of the instructions before using this appliance. When using this appliance, always exercise basic safety precautions, including the following:

NOTE: If the refrigerator has been placed in a lying-down or tilted position for any period of time, keep it in the upright position and wait 24 hours before plugging the unit in.

1) Use this appliance only for its intended purpose as described in this use and care guide.

2) This refrigerator must be properly installed in accordance with the installation instructions before it is used. See the installation section.

3) Never unplug your refrigerator by pulling on the power cord. Always grasp the plug firmly and pull straight out from the outlet.

4) Repair or replace immediately, all electric service cords that have become frayed or otherwise damaged. Do not use a cord that shows cracks or abrasion damage along its length, the plug or the connector end.

5) Unplug your refrigerator before cleaning or before making any repairs. **Note:** If for any reason this product requires service, we strongly recommend that a certified technician perform the service.

6) Do not use any electrical device or any sharp instrument in defrosting your refrigerator.

7) After your refrigerator is in operation, do not touch the cold surfaces in the freezer compartment, particularly when hands are damp or wet. Skin may adhere to these extremely cold surfaces.

8) Do not refreeze foods that have been thawed completely. The United States Department of Agriculture in Home and Garden Bulletin No. 69 reads: "…You may safely refreeze frozen foods that have thawed if they still contain ice crystals or if they are still cold-below 40°F.

   "…Thawed ground meats, poultry, or fish that have any off-odor or off-color should not be refrozen and should not be eaten. Thawed ice cream should be discarded. If the odor or color of any food is poor or questionable, discard it. The food may be dangerous to eat.

"…Even partial thawing and re-freezing reduce the eating quality of foods, particularly fruits, vegetables, and prepared foods. The eating quality of red meats is affected less than that of many other foods. Use refrozen foods as soon as possible, to save as much of its eating quality as you can."

9) This refrigerator should not be recessed or built-in in an enclosed cabinet. It is designed for freestanding installation only.

10) Do not operate your refrigerator in the presence of explosive fumes.

DANGER – Risk Of Fire Or Explosion. Flammable Refrigerant Used. To Be Repaired Only By Trained Service Personnel. Do Not Puncture Refrigerant Tubing
CAUTION – Risk Of Fire Or Explosion. Flammable Refrigerant Used. Consult Repair Manual/Owner's Guide Before Attempting To Service This Product. All Safety Precautions Must be Followed
CAUTION – Risk Of Fire Or Explosion. Dispose Of Property In Accordance With Federal Or Local Regulations. Flammable Refrigerant Used
CAUTION – Risk Of Fire Or Explosion Due To Puncture Of Refrigerant Tubing; Follow Handling Instructions Carefully. Flammable Refrigerant Used

DANGER

Risk of child entrapment. Before you throw away your old refrigerator or freezer, take off the doors. Leave the shelves in place so that children may not easily climb inside.

SAVE THESE INSTRUCTIONS
HOUSEHOLD USE ONLY

Parts And Features

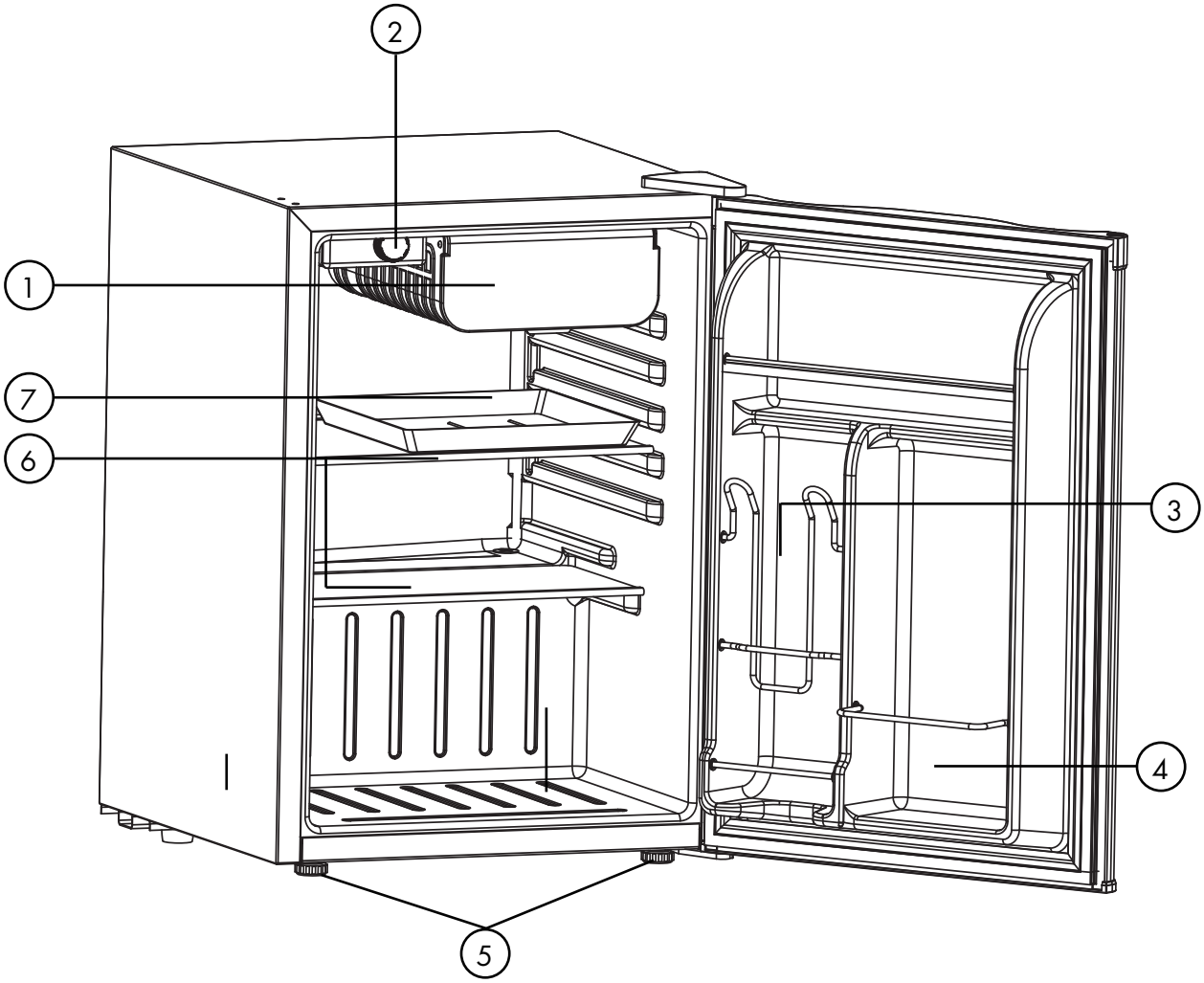

1. Half-Width Freezer
2. Adjustable Temperature Control
3. "Dispense-A-Can" Chamber
4. Large-capacity Chamber:
   a 2-liter tall bottle could be accommodated
5. Adjustable Front Leveling Legs
6. Removable Glass Shelves
7. Drip Tray

Installing Your Refrigerator

Unpacking Your Refrigerator

1. Remove all packaging material. This includes the foam base and all adhesive tape holding the refrigerator accessories inside and outside.
2. Inspect and remove any remains of packing, tape or printed materials before powering on the refrigerator.

Leveling Your Refrigerator

- Your refrigerator has two leveling legs which are located in the front bottom corners of your refrigerator. After properly placing your refrigerator in its final position, you can level your refrigerator.
- Leveling legs can be adjusted by turning them counterclockwise to raise your refrigerator or by turning them clockwise to lower your refrigerator. The refrigerator door will close easier when the leveling legs are extended.

Proper Air Circulation

- To ensure your refrigerator works at the maximum efficiency it was designed for, you should install it in a location where there is proper air circulation, plumbing and electrical connections.
- The following are recommended clearances around the refrigerator:
  Sides.....3/4" (19mm)
  Top.....2" (50mm)
  Back.....2" (50mm)

Electrical Requirement

- Make sure there is a suitable power outlet (115 volts, 15 amps outlet) with proper grounding to power the refrigerator.
- Avoid the use of three prong adapters or cutting off the third grounding prong in order to accommodate a two prong outlet. This is a dangerous practice since it provides no effective grounding for the refrigerator and may result in shock hazard.

Use of Extension Cords

- Avoid the use of an extension cord because of potential safety hazards under certain conditions. If it is necessary to use an extension cord, use only a 3-wire extension cord that has a 3-blade grounding plug and a 3-slot outlet that will accept the plug. The marked rating of the extension cord must be equal to or greater than the electrical rating of the appliance.

Installation Limitations

- Do not install your refrigerator in any location not properly insulated or heated, e.g. garage, etc. Your refrigerator was not designed to operate in temperature settings below 55˚ Fahrenheit.
- Select a suitable location for the refrigerator on a hard even surface away from direct sunlight or heat source, e.g. radiators, baseboard heaters, cooking appliances, etc. Any floor unevenness should be corrected with the leveling legs located on the front bottom corners of the refrigerator.

Reversing the Door Hinge

1. Remove the top hinge cover.
2. Using Phillips Head Screwdriver, loosen and remove the screws holding the top hinge in place.
3. Remove top hinge and carefully lift off the door.
4. Remove the screw hole plugs from the opposite side and insert the plugs in the screw hole openings of the just removed screws.
5. Remove any loose items in the refrigerator and carefully turn refrigerator on its back and place in a secure area.
6. Loosen the screws holding the lower hinge to the refrigerator and remove the lower hinge.
7. Remove 2 plugs from the other side and insert in the previously removed screw holes.
8. Remove door pin and reinsert to the underside of the lower hinge and tighten.
9. Align lower hinge and insert the2 screws into the holes provided .
10. Align hole in the door with the door pin and washer and gently push down until firm.
11. Align top hinge with screw holes, insert screws and partially secure, check that door and cabinet are properly aligned and then secure tightly.
12. Replace top hinge cover.

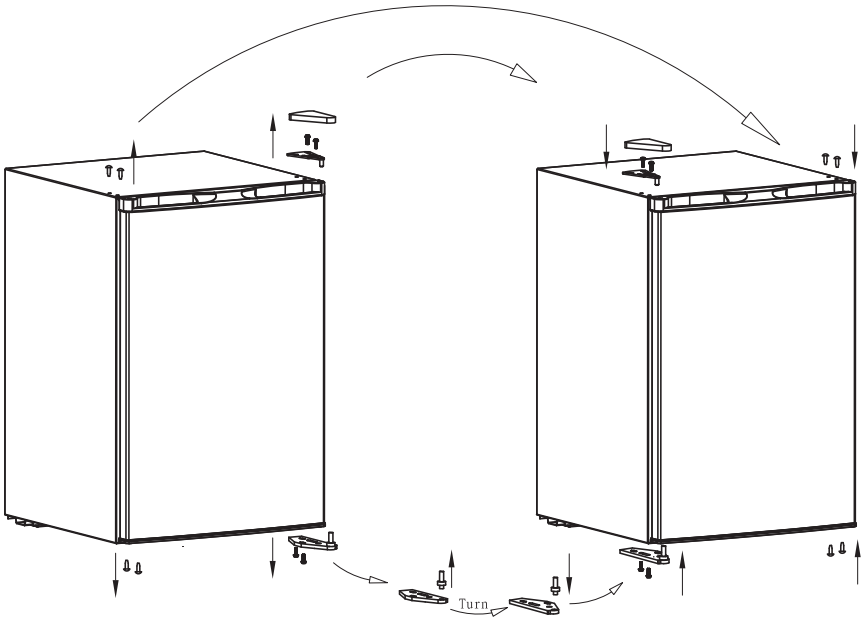

NOTE: As the door gets pressed in during shipping, after reversing the door, the gasket may have to be reset. This is done to prevent the cool refrigerated air from escaping. If there is a gap between the door gasket and the cabinet, set the gasket by gently pulling it out to seal the gap.

Door Alignment

1. Remove the top hinge cover.
2. Loosen the top hinge screws using a phillips head screwdriver.
3. Adjust the door or put a spacer in between and then tighten the screws.
4. Replace the top hinge cover.

Refrigerator Features And Use

Adjustable temperature dial:

Your refrigerator will automatically maintain the temperature level you select. The temperature control dial has 7 settings plus "0". 1 is the warmest. 7 is the coldest. At first, set the dial to 4 and allow 24 hours to pass before adjusting the temperature to your needs.

(Note: If the refrigerator has been placed in a lying-down or tilted position for any period of time, keep it in the upright position and wait 24 hours before plugging the unit in.)

Refrigerator Interior Shelves

To remove or replace a full-width slide-out shelf:

1. Gently tilt the shelf up and slide forward until the shelf has been completely removed. (see fig. # 1)
2. To replace the shelf, gently slide the shelf back.

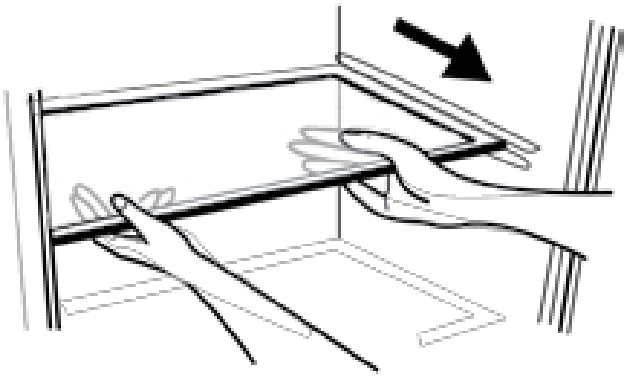

fig. # 1

Using the Dispense-A-Can™

- Your refrigerator is equipped with the convenient "Dispense-A-Can™" compartment. The compartment will hold up to five cans. Simply load the cans from the top. To dispense a can, simply draw one out from the bottom. It is that easy.

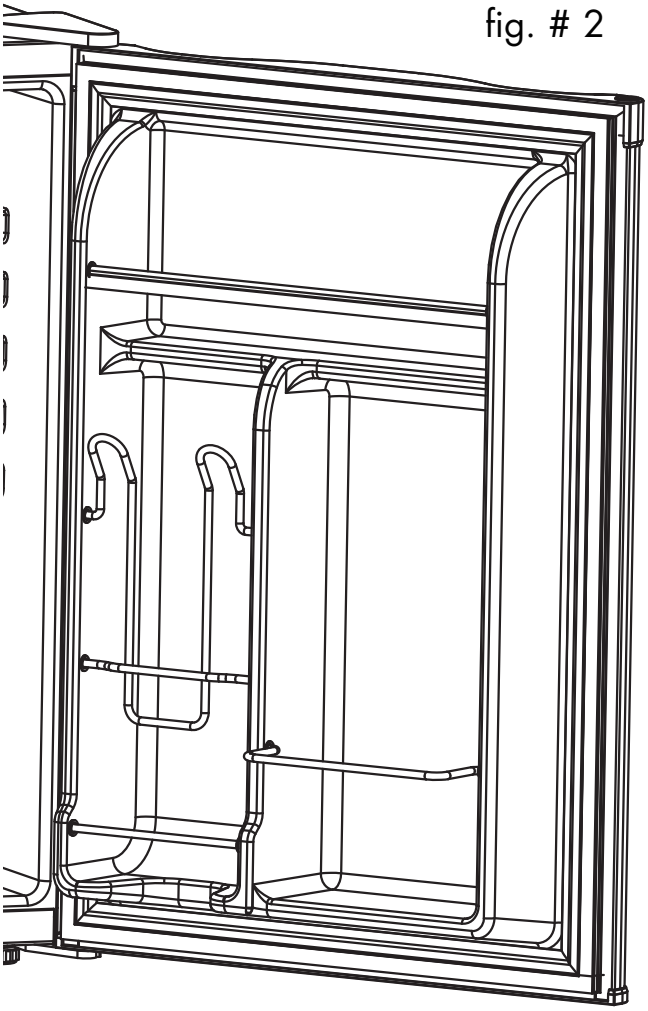

fig. # 2

Food Storage Information

Fresh Food

- When storing fresh food that is not prepackaged, be sure to wrap or store food in airtight and moisture proof material unless otherwise noted. This will ensure proper shelf life and prevent the transfer of odors and tastes.
- Wipe containers before storing to avoid needless spills.
- Eggs should be stored in an upright position in their original carton to maximize shelf life.
- Fruit should be washed and dried, then stored in sealed plastic bags before storing in the refrigerator.
- Vegetables with skins should be stored in plastic bags or containers.
- Leafy vegetables should be washed and drained and then stored in plastic bags or containers.
- Hot food should be allowed to cool before storing in the refrigeration. This will prevent unnecessary energy use.
- Fresh seafood should be used the same day as purchased.
- When storing meats in the fresh food section, keep in the original packaging or rewrap as necessary. Follow the suggestions below for safe storage:

• Chicken	1-2 Days
• Ground Beef	1-2 Days
• Cold Cuts	3-5 Days
• Steaks/Roasts	3-5 Days
• Smoked/Cured Meats	7-10 Days
• All others	1-2 Days

Normal Operating Sounds You May Hear

- Boiling water, gurgling sounds or slight vibrations that are the result of the refrigerant circulating through the cooling coils.
- The thermostat control will click when it cycles on and off.

Proper Refrigerator Care and Cleaning

Cleaning and Maintenance

Warning: To avoid electric shock, always unplug your refrigerator before cleaning. Ignoring this warning may result in death or injury.

Caution: Before using cleaning products, always read and follow manufacturer's instructions and warnings to avoid personal injury or product damage.

General: Prepare a cleaning solution of 3-4 tablespoons of baking soda mixed with warm water. Use sponge or soft cloth, dampened with the cleaning solution, to wipe down your refrigerator.

- Rinse with clean warm water and dry with a soft cloth.
- Do not use harsh chemicals, abrasives, ammonia, chlorine bleach, concentrated detergents, solvents or metal scouring pads. Some of these chemicals may dissolve, damage and/ or discolor your refrigerator.

Door Gaskets: Clean door gaskets every three months according to general instructions. Gaskets must be kept clean and pliable to assure a proper seal.

- Petroleum jelly applied lightly on the hinge side of gaskets will keep the gasket pliable and ensure a good seal.

Defrosting

Defrost whenever frost on the wall of the freezer compartment becomes 1/8" thick. Never use a sharp or metallic instrument to remove frost as it may damage the cooling coils. (A punctured cooling coil will cause serious damage to the product and will void the warranty). We recommend using a plastic scraper. To defrost, remove foods from the freezer compartment. Make sure the drip tray is in place and unplug the unit. Defrosting usually takes a few hours. To defrost faster, keep the door open and place a bowl of warm water in the refrigerator. After defrosting, empty water from the drip tray and wash the drip tray in warm water.

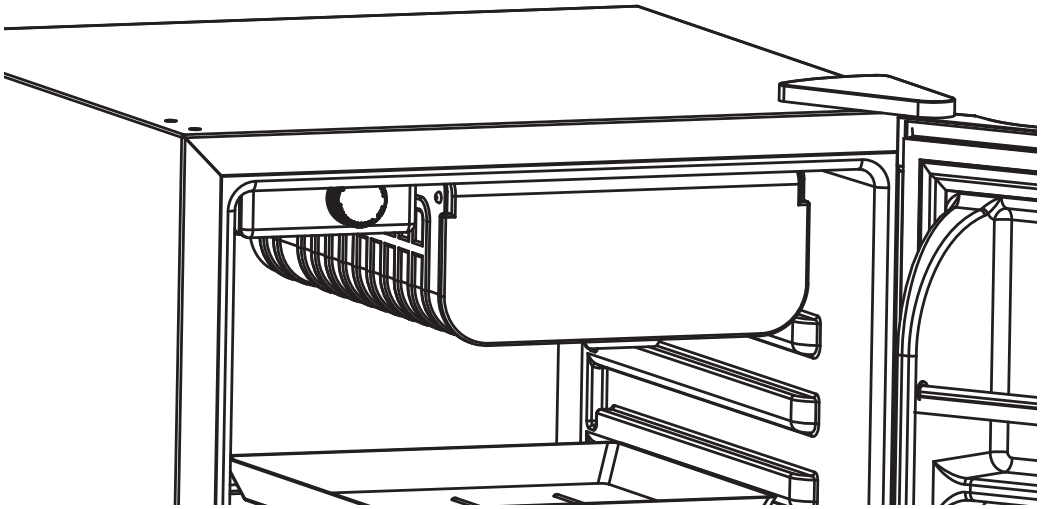

Power Interruptions

- Occasionally there may be power interruptions due to thunderstorms or other causes. Remove the power cord from AC outlet when a power outage occurs. When power has been restored, replug power cord to AC outlet. If outage is for a prolonged period, inspect and discard spoiled or thawed food in refrigerator. Clean refrigerator before reusing.

Vacation and Moving Care

- For long vacations or absences, empty food from refrigerator, move the temperature dial to the "0" position and clean the refrigerator and door gaskets according to "General Cleaning" section. Prop doors open, so air can circulate inside.When moving, always move the refrigerator vertically. Do not move with the unit lying down. Possible damage to the cooling system could occur.

Energy Saving Tips

- The refrigerater should be located in the coolest area of the room, away from heat-producing appliances or heating ducts, and out of direct sunlight.
- Let hot foods cool to room temperature before placing in the refrigerator. Overloading the refrigerator forces the compressor to run longer and thus increases energy consumption. Foods that refrigerate too slowly may lose quality or spoil.
- Be sure to wrap foods properly, and wipe containers dry before placing in the refrigerator.
- The wire shelves should not be lined with aluminum foil, wax paper, or paper towels. Liners interfere with cold air circulation, making the refrigerator less efficient.
- Organize food to reduce door openings and extended searches. Remove as many items as needed at one time, and close the door as soon as possible.

Troubleshooting

Refrigerator does not operate:
- Check if thermostat control is in the “0” position.
- Check if refrigerator is plugged in.
- Check if there is power at the AC outlet, by checking the circuit breaker.

Food temperature appears too warm:
- Frequent door openings.
- Allow time for recently added warm food to reach desired food temperature.
- Check gaskets for proper seal.
- Adjust temperature control to colder setting.

Food temperature is too cold:
- If temperature control setting is too cold, adjust to a warmer setting and allow several hours for temperature to adjust.

Refrigerator runs too frequently:
- This may be normal to maintain constant temperature during high temperature and humid days.
- Doors may have been opened frequently or for an extended period of time.
- Check gasket for proper seal.
- Check to see if doors are completely closed.

Moisture build up on interior or exterior of the refrigerator:
- This is normal during high humidity periods.
- Prolonged or frequent door openings.
- Check door gaskets for proper seal.

Refrigerator has an odor:
- Interior needs cleaning.
- Foods improperly wrapped or sealed are giving off odors.

Refrigerator door does not shut properly:
- Level the refrigerator.
- Re-align refrigerator door.
- Check for blockages, e.g. food containers, crisper cover,shelves, bins, etc.

Popping or cracking sound when the compressor comes on:
- Check to ensure the refrigerator is level.
- The floor may be uneven or weak. The refrigerator rocks on the floor when it is moved slightly. Be sure the floor can adequately support the refrigerator. Level the refrigerator by putting wood or metal shims under part of the refrigerator.
- The refrigerator is touching the wall. Re-level the refrigerator and move it from the wall. See the “Installing Your Refrigerator” section.

ROWAN ELECTRIC APPLIANCE LLC

8:30am-5:30pm P.S.T.
Monday to Friday

Thank you for purchasing this product! If you have any questions about the product such as missing parts, damaged products, product assembling and operation, please contact us via customer service team:

Email: service@electacticshop.com

Web: www.electacticshop.com

Tel: 888-698-2504