# Assembly Instructions

**Caution : You must read this before you proceed**

## Care & Maintenance

- Not for commercial use. For residential use only.
- Prolonged exposure to rain may cause rusting which can stain floors.
- Do not put hot items directly on furniture surface.
- Do not clean furniture with harsh cleansers or polish.
- To obtain the longest lifespan of your outdoor products, minimizing exposure to direct sunlight is recommended.
- Children should not climb or jump on the furniture.
- Do not write on furniture without a padded barrier to protect the surface.
- To obtain the longest lifespan of your outdoor products, avoid extended and lengthy exposure to rain, snow, and direct sunshine. Whenever possible cover the product and /or place under patio or awnings.
- Stains may be removed with mild soap solution and damp cloth.
- Keep away from sources of ignition.

- Dust and pick-up spills using a clean, non-colored, lint-free cloth.

# Assembly Instructions

## TABLE

**CAUTION: You must read this before you proceed.**

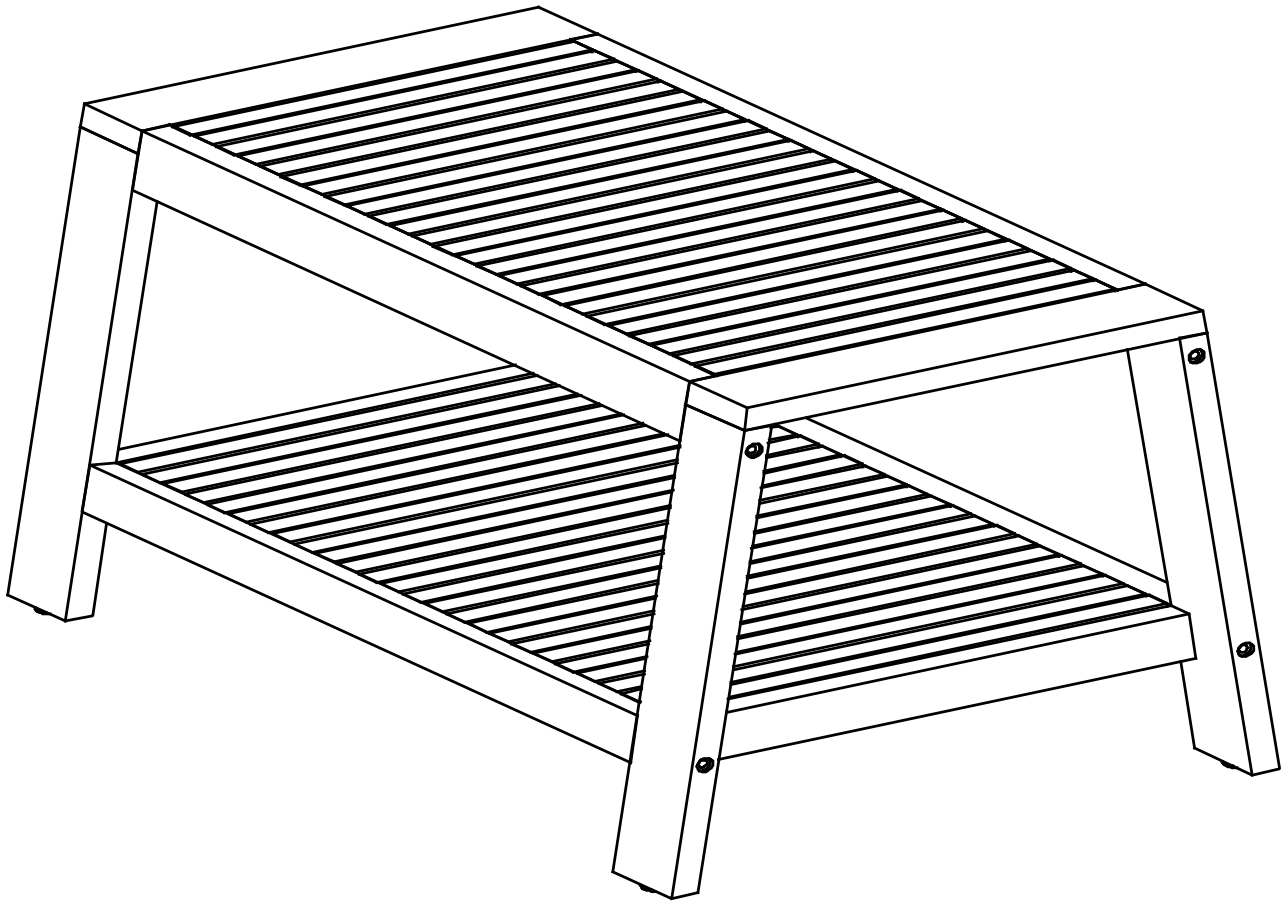

**CAUTION :** This Table is NOT a TOY. Keep your child / children at bay in the process of assembly.
For turning the Table and to prevent damage to the Table, 02 persons may be needed to execute this action.

## Parts List

| No. | Picture | Description | Qty |
|---|---|---|---|
| A | 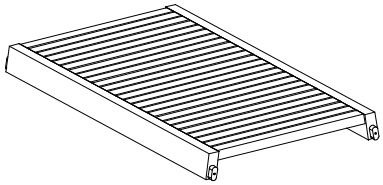 | Table top | 1 |
| B | 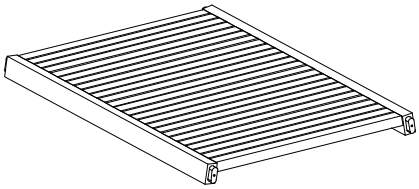 | Shelf Panel | 1 |
| C | 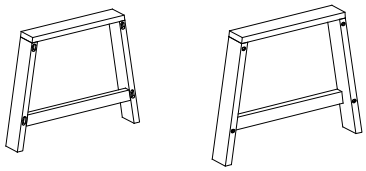 | Leg Panels | 2 |

## Hardware

| No. | Picture | Description | Qty |
|---|---|---|---|
| 1 | | Screws (M6x90 mm) | 9 |
| 2 | | Allen Key | 1 |

## Assembly Preparation

### Before Beginning Assembly:

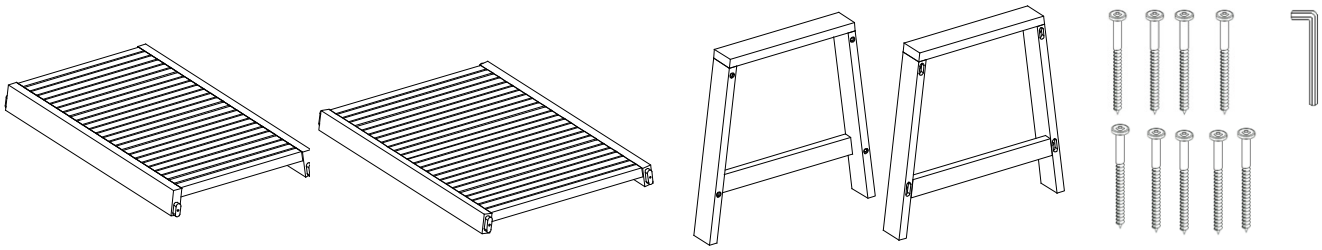

- ☒ Read instructions, cover to cover.
- ☒ Have 2 adults on hand for assembly.
- ☒ Do not assemble on flooring or carpet.
- ☒ Assemble on a clean non-marring surface (packing foam).
- ☒ Save all packaging until finished.

# Assembly Steps

## OVERVIEW

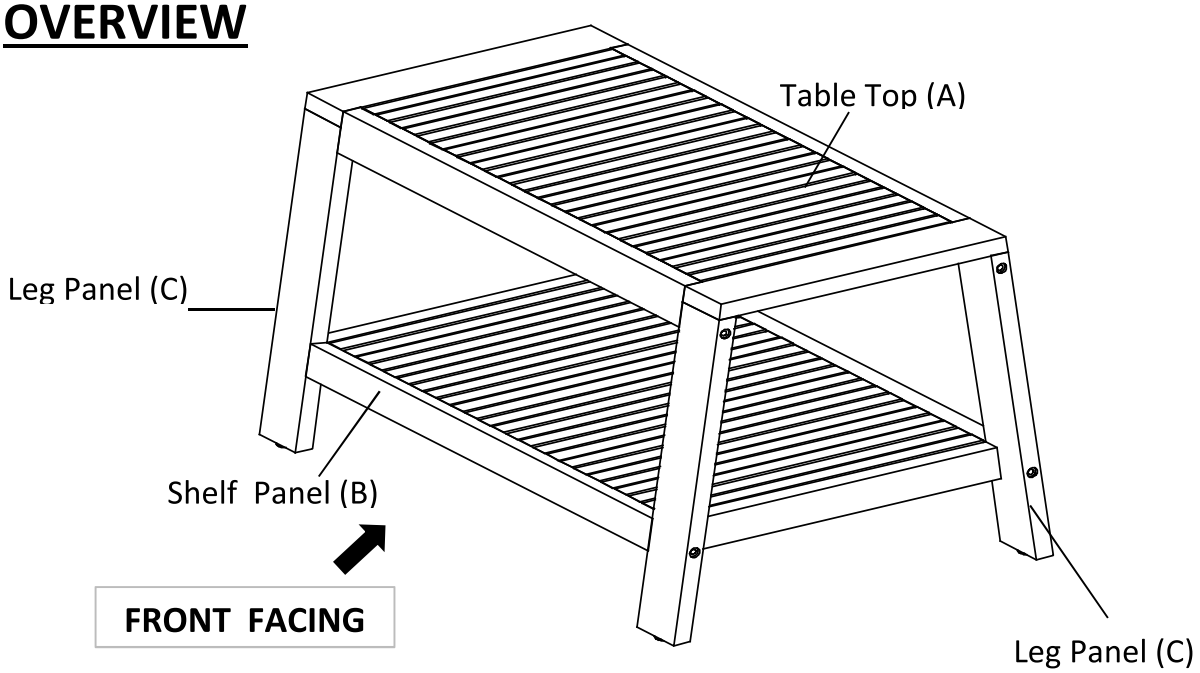


This Table has multiple parts and may require up to some 30 minutes to assemble. To give you an overview of the Table parts, the above picture is to help you put the various parts into perspective. Please read through the instructions here below to familiarise the parts and steps before assembly.

## Step 1

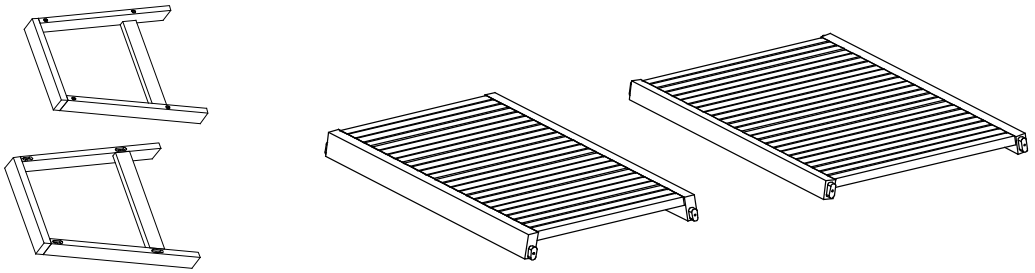

Unpack and place all parts on a clean non marring flat surface .

## Step 2

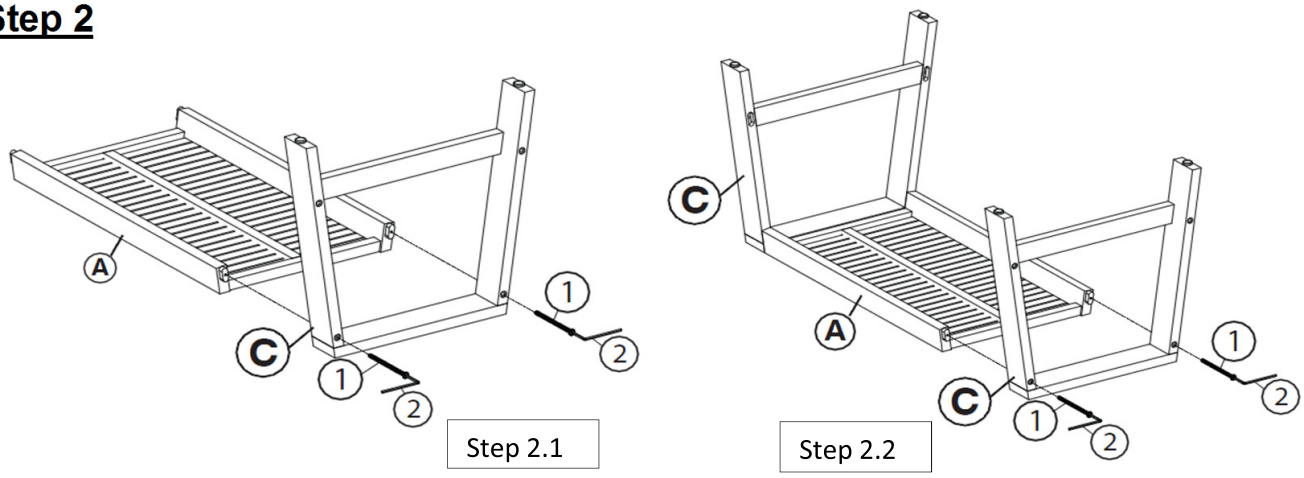


Step 2.1: Position Table Top (A) and Leg Panel (C) as shown in picture above.
Then affix 1st Leg Panel (C) to Table Top (A) by using Screws (①) and Allen Key (②).
Step 2.2: Repeat the same process to affix 2nd Leg Panel (C) to Table Top (A) by using Screws (①) and Allen Key (②)
**DO NOT FULLY TIGHTHEN SCREWS.**

## Step 3

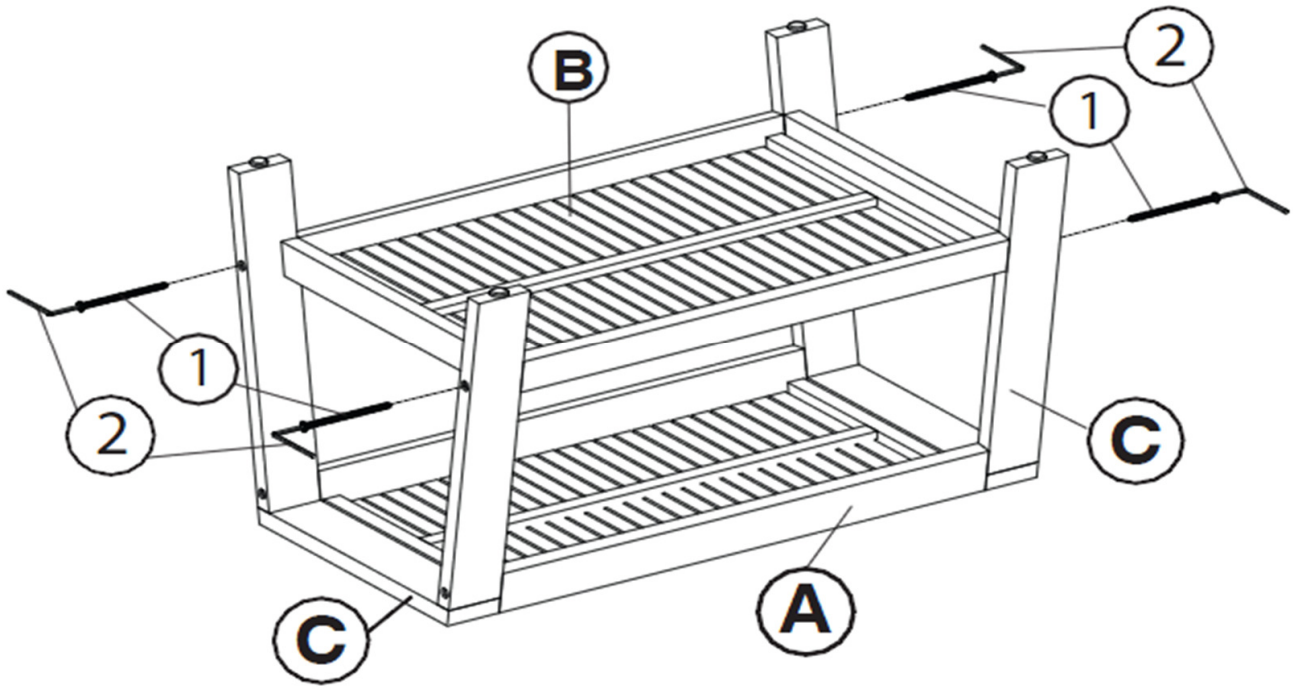


Affix Shelf Panel(B) to Leg Panels (C) by using Screws (①) and Allen Key (②).
You may need to push the Leg Panels (C) outwards slightly to attach the legs.

**CAUTION: When tightening these screws, tighten sequentially.**
**DO NOT tighten any screw fully and then towards the next one.**
**This would cause the frame to warp.**

## Step 4

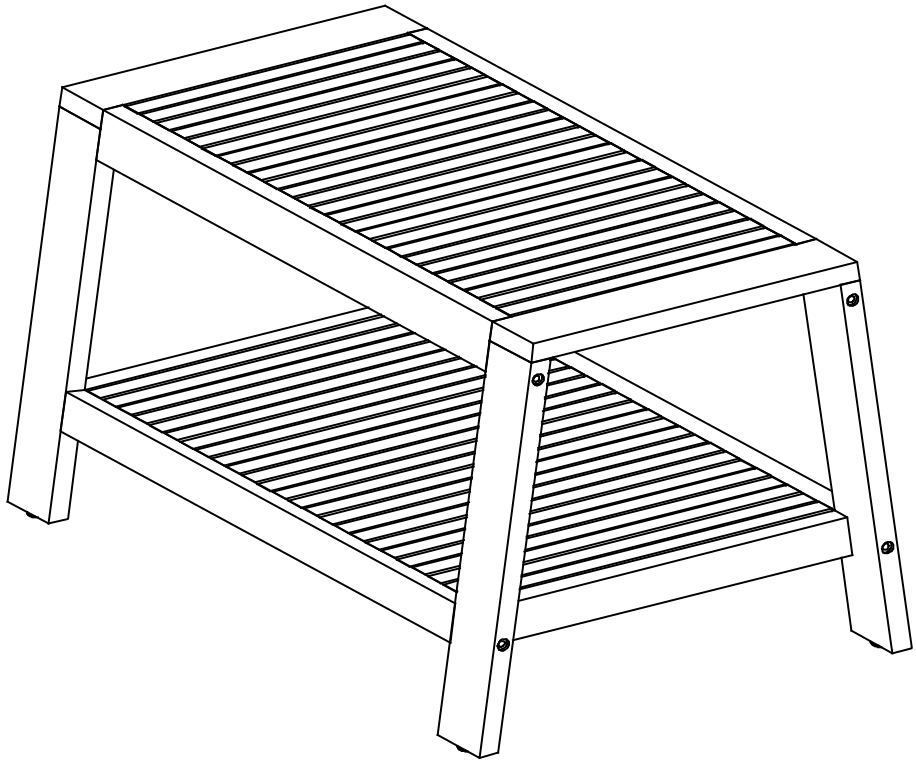

Ensure all screws are fully locked into position.
The Table is ready to be used.
**Caution: This Table can only be used on a flat, level surface.**

**Please look the Table Top for hardware packs**

# LOVESEAT

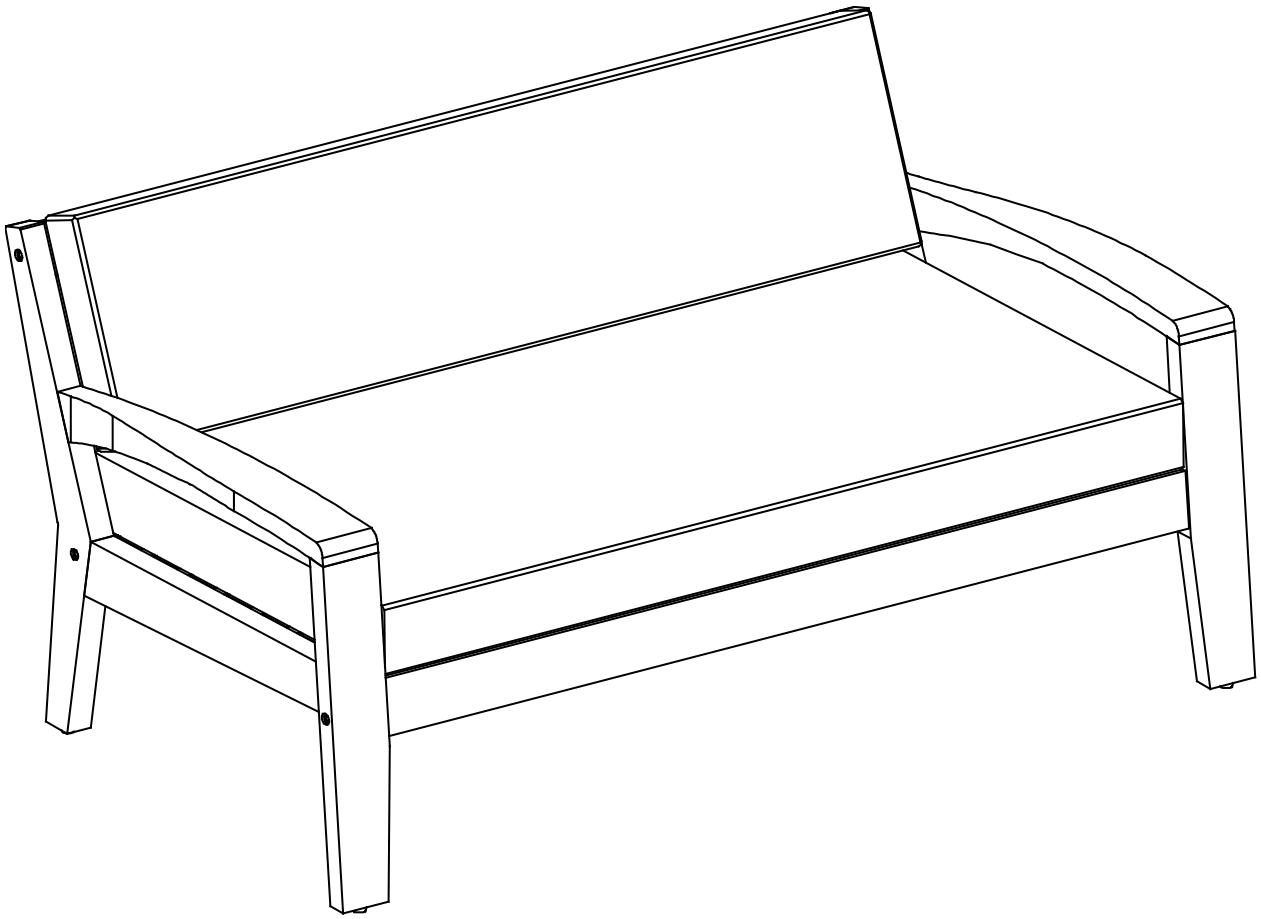

**CAUTION** : This Loveseat is NOT a TOY.
Keep your child / children at bay in the process of assembly.
For turning the Loveseat and to prevent damage to the Loveseat, 2 persons may be needed to execute this action.

## Parts List

| No. | Picture | Description | Qty |
|---|---|---|---|
| A | | Backrest Panel | 1 |
| B | | Left Arm Panel With Pre-installed Levellers | 1 |
| C | | Right Arm Panel With Pre-installed Levellers | 1 |
| D | | Seat Panel | 1 |
| E | | Back Support Bar | 1 |
| F | | Front Support Bar | 1 |
| G | | Seat Cushion | 1 |
| H | | Back Cushion | 1 |

## Hardware

| No. | Picture | Description | Qty |
|---|---|---|---|
| 1 | | Long Screws (M7x110mm) | 3 |
| 2 | | Medium Screws (M7x70mm) | 5 |
| 3 | | Short Screws (M6x45mm) | 5 |
| 4 | | Allen Wrench | 1 |

# Assembly Preparation

## Before Beginning Assembly:

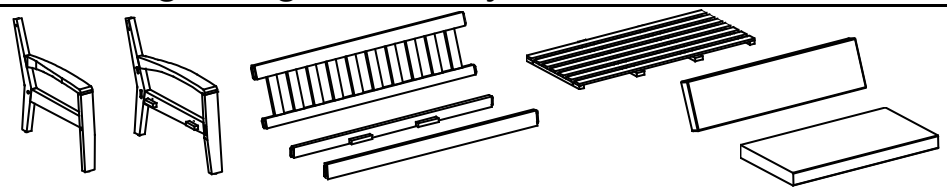

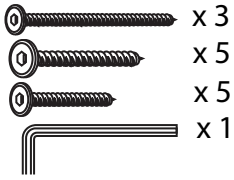


- ☒ Read instructions, cover to cover.
- ☒ Have 2 adults on hand for assembly.
- ☒ Do not assemble on flooring or carpet.
- ☒ Assemble on a clean non-marring surface (packing foam).
- ☒ Save all packaging until finished.

# Assembly Steps

## OVERVIEW

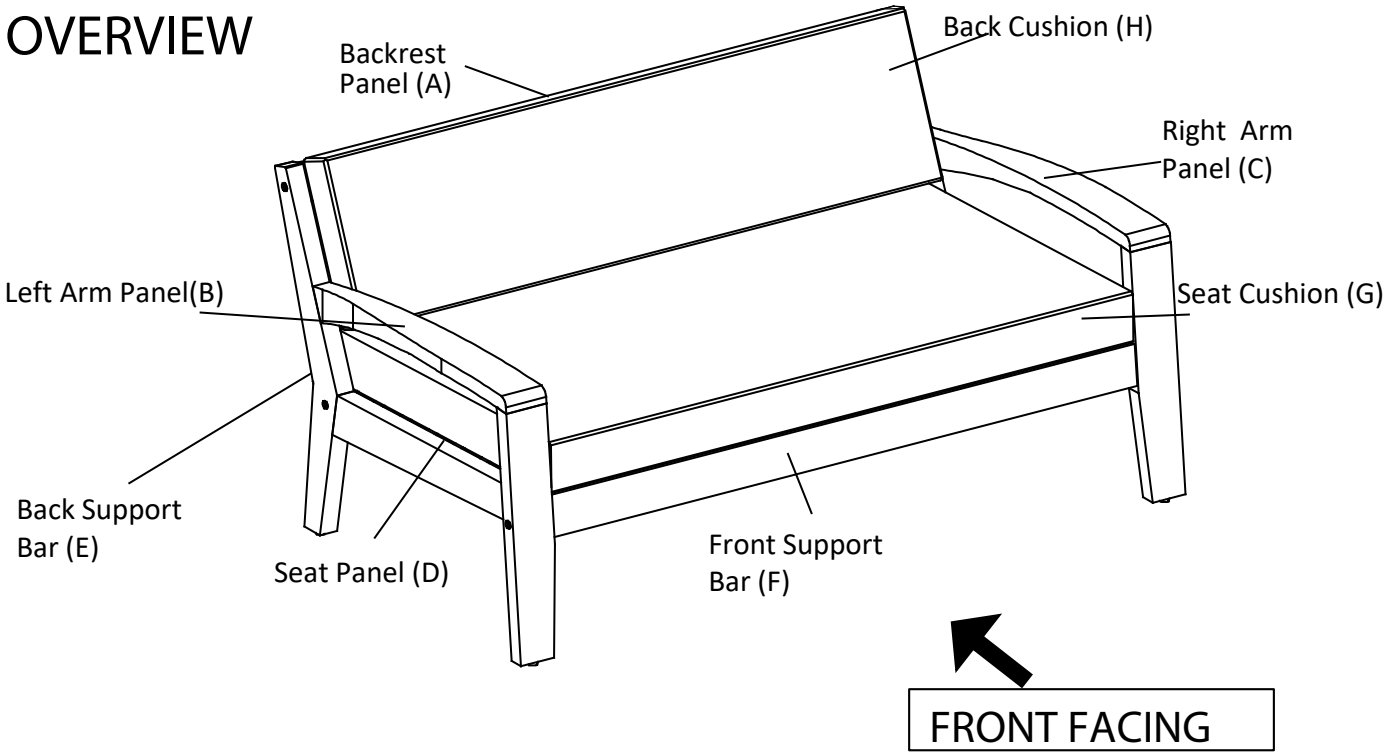


This Loveseat has multiple parts and may require up to 30 minutes to assemble.
To give you an overview of the Loveseat parts, the above picture is to help you put the various parts into perspective.
Please read through the instructions herebelow to familiarise the parts and steps before assembly.

**Step 1**

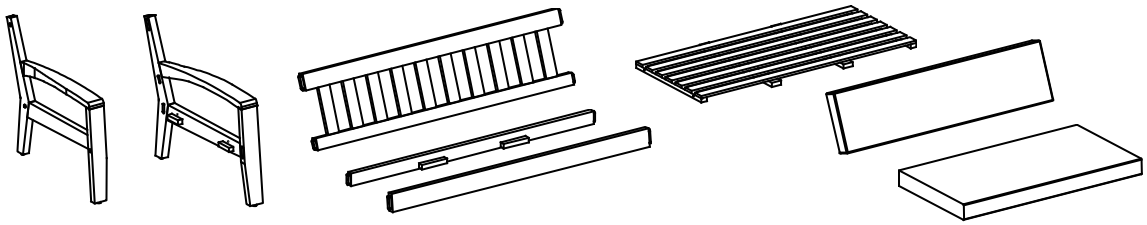

Unpack and place all parts on a clean, non-marring surface.

## Step 2

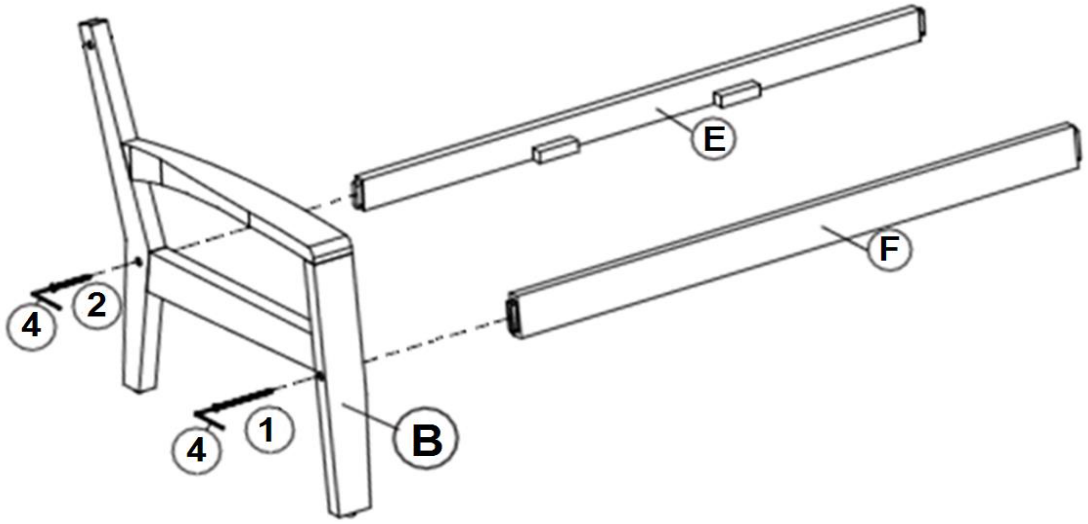


Place Left Arm Panel (B) stand up as shown in picture onto a clean, soft surface to avoid any scratches or damages to the product.
Align the tenon of Back Support Bar (E) and Front Support Bar (F) into the Mortise of the Left Arm Panel (B).
Then, affix Back Support Bar (E) and Front Support Bar (F) with Left Arm Panel (B) by using Long Screw (① ), Medium Screw (② ) and Allen Wrench (④ ).
**DO NOT FULLY TIGHTHEN SCREWS.**

## Step 3

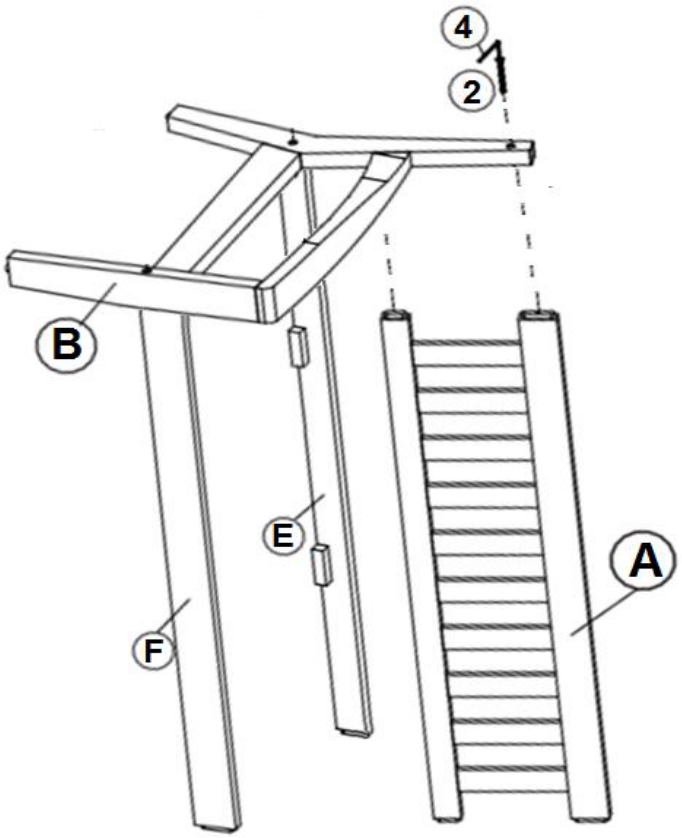


Then keep position Backrest Panel (A) as shown in picture above.
Align the tenon of Backrest Panel (A) into the Mortise of the Left Arm Panel (B).
Affix Left Arm Panel (B) with Backrest Panel (A) by using Medium Screw (② )and Allen Wrench(④ ).
**DO NOT FULLY TIGHTHEN SCREWS.**

**Step 4**

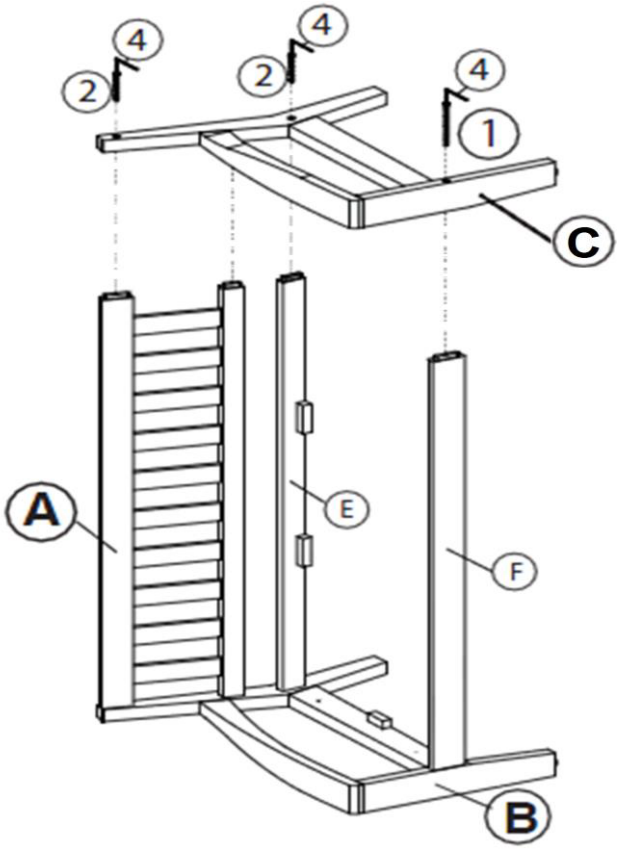


With the help from your partner, turn the Loveseat to rest on Left Arm Panel (B) so that Right Arm Panel (C) is now facing skywards.
Repeat the same process at step 2, step 3 to affix the Arm Panel (C) with Long Screw (① ), Medium Screws (② ) to designated points.
**DO NOT FULLY TIGHTHEN SCREWS**

**Step 5**

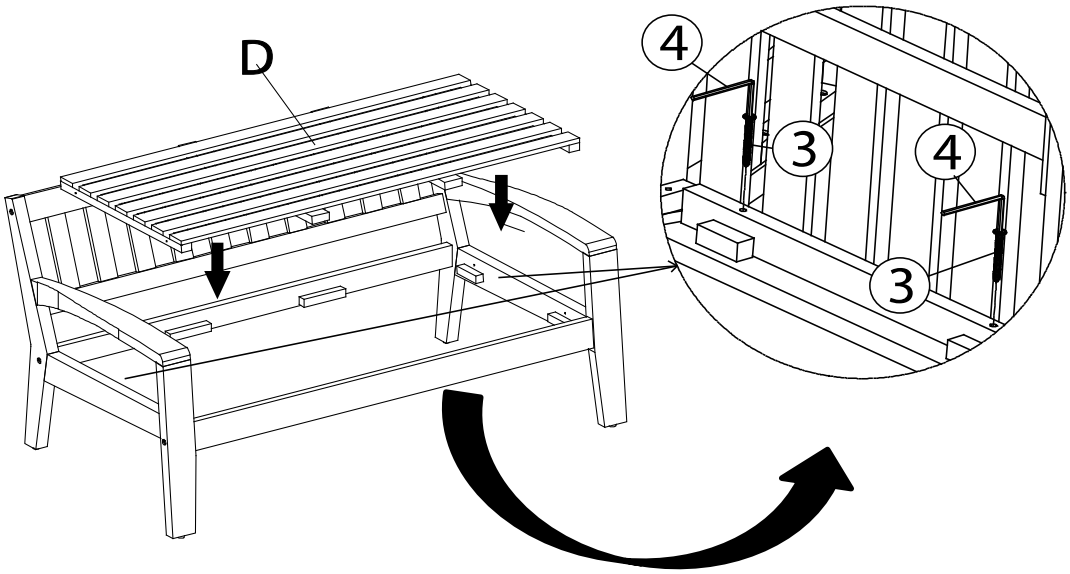


Attach the Seat Panel (D) onto the Loveseat as shown in picture above.
Affix Seat Panel (D) with Loveseat by using Short Screws (③ ) and Allen Wrench (④ ).
Note: Using Short Screws (③ ) from inside to outside of Seat Panel (D)
**DO NOT FULLY TIGHTHEN SCREWS.**

## Step 6

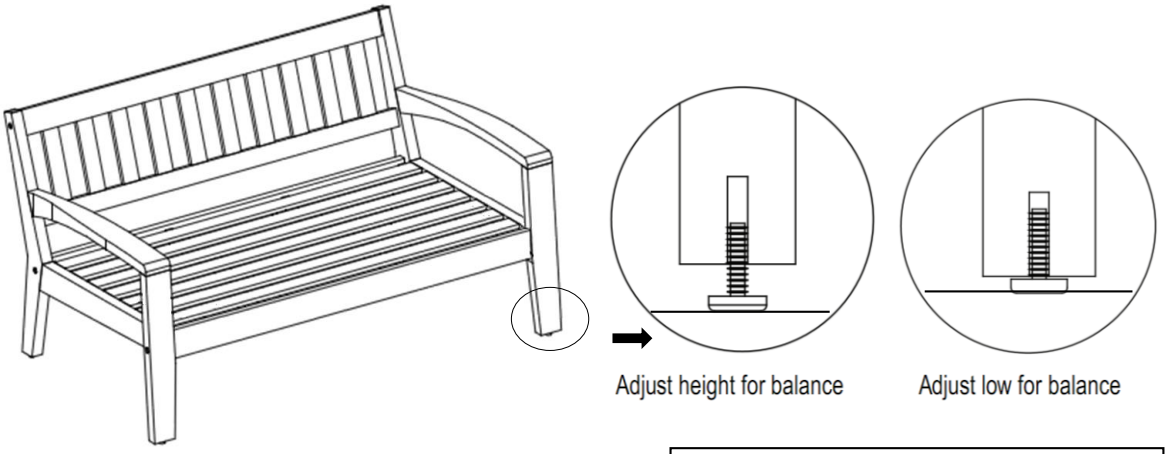


Adjust Pre-installed Levelers height for balance

Inspect the Loveseat and make sure all parts are adequately connected.
In a sequential manner, tighten all Screws at all joints.
**With assistance from your adult partners, adjust the Levelers to desired height to avoid wobbles.**

## Step 7

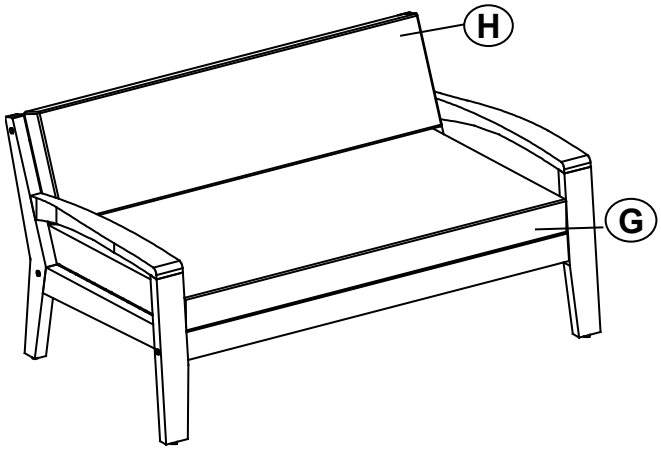


Ensure all screws are fully locked into position.
Place Seat Cushion (G), Back Cushion (H) into the Loveseat.
Then affix the "magic tape straps" around the Loveseat as shown above.
The Loveseat is ready to be used.
**Caution: This Loveseat can only be used on a flat, level surface.**