Six-drawer cabinet

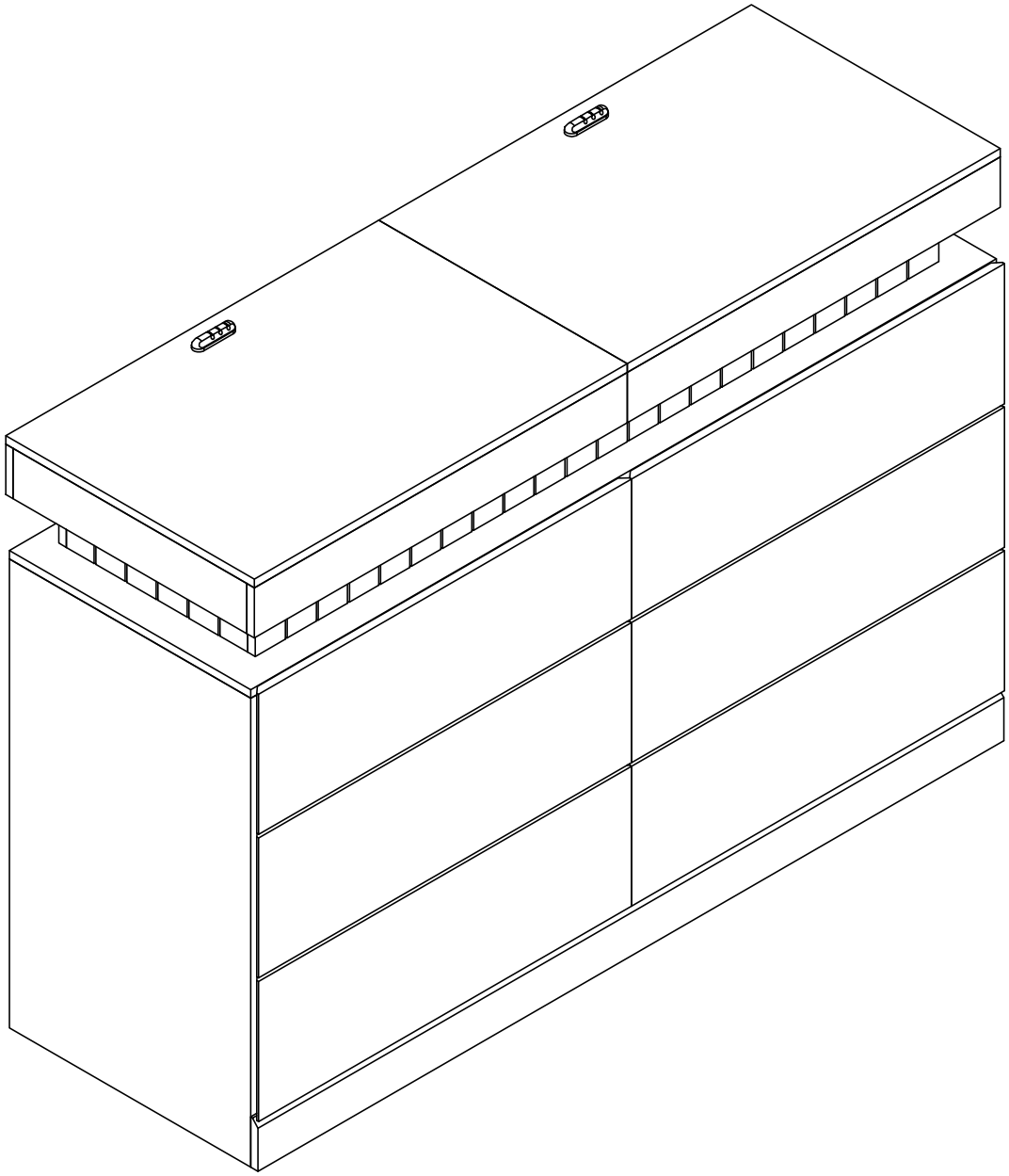

Note: During the installation process, pay attention to the installation direction and hole position of the board and accessories, and check repeatedly after each step of installation to avoid installation errors.

AJ-DJ505058

PRODUCT ASSEMBLY

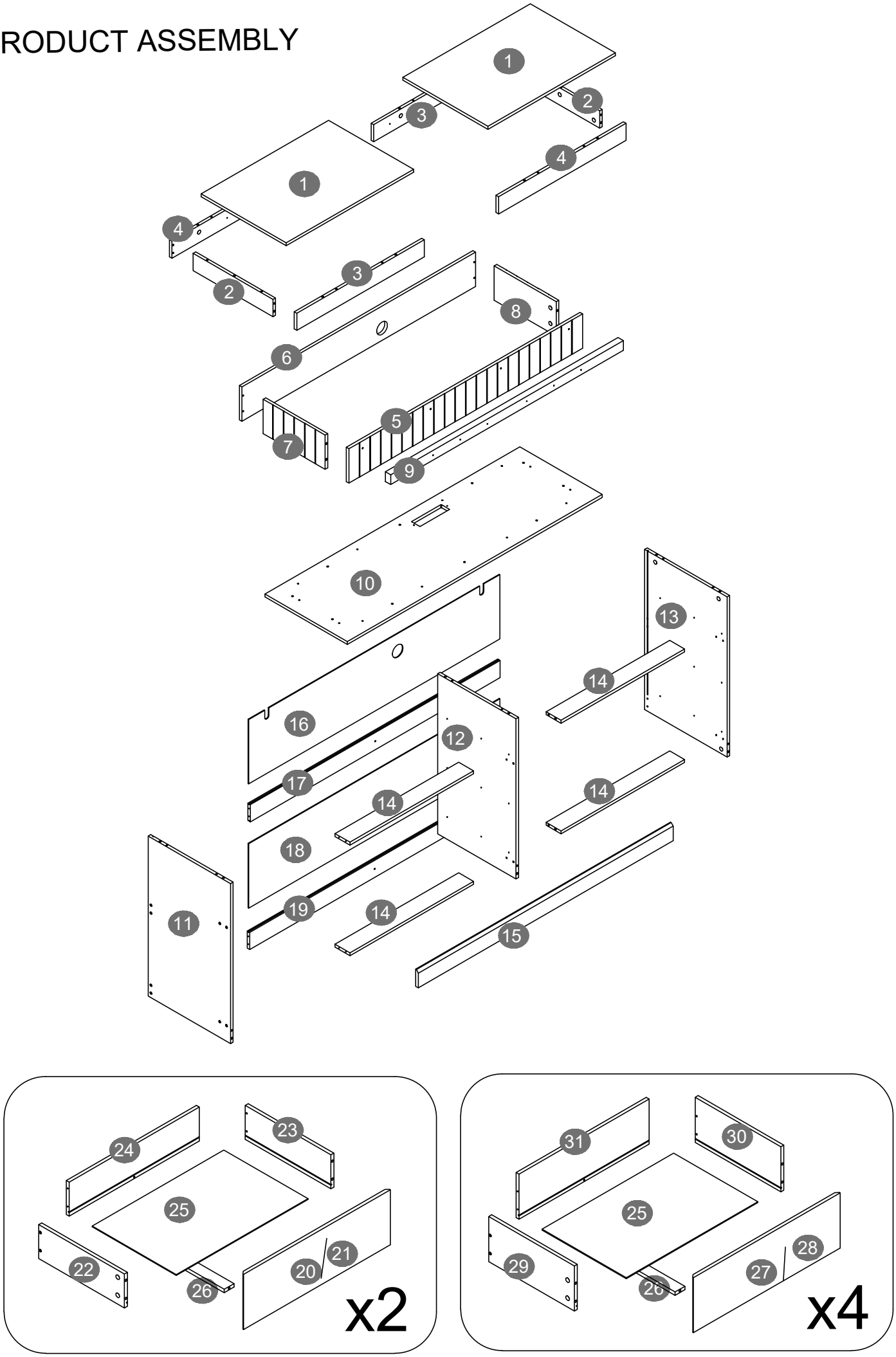

Components - Fittings

Please check you have all the panels listed below

Note: The quantitie below are the correcet amount to complete the assembly. In some cases more fittings may be supplied than are required.

A		61 pcs +3 pcs	B		61 pcs +3 pcs
C		39 pcs +3 pcs	D		50 pcs +5 pcs
E	3.5*12mm	96 pcs +5 pcs	F		1 pc
G		1 pc	H		2 pcs
I		8 pcs	J		2 pcs
K		2 pcs	L		2 pcs
M		4 set	N		9 pcs +1 pcs
O		16 pcs +1 pc	P		4 pcs
Q		16 pcs +4 pcs			1 pc
CL		6 pcs	CR		6 pcs
DL		6 pcs	DR		6 pcs

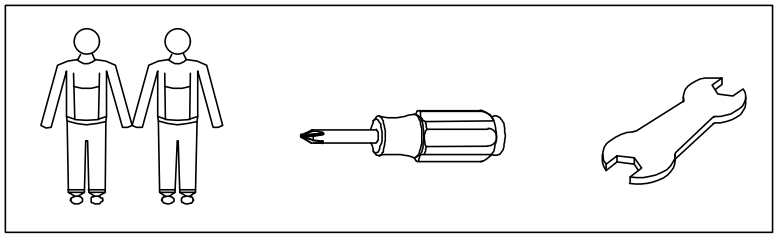

Parts Identification

1

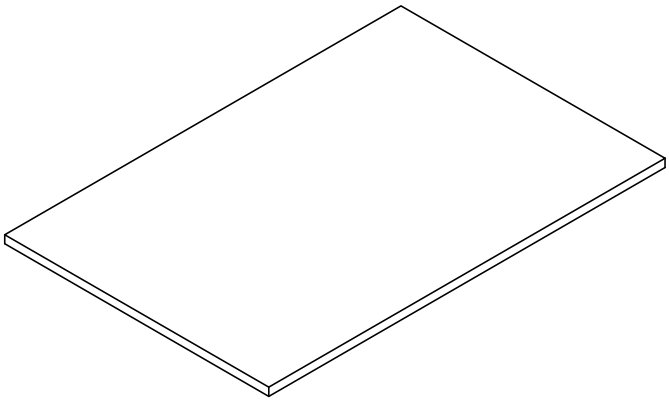

x2

2

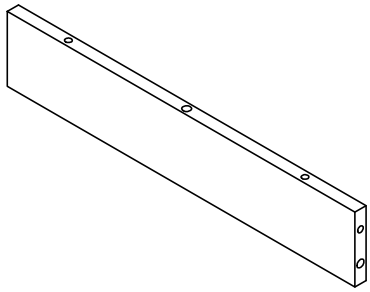

x2

3

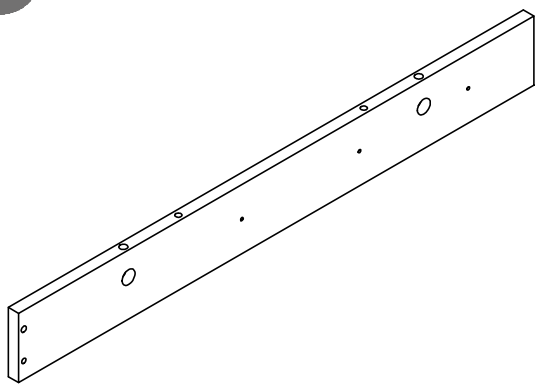

x2

4

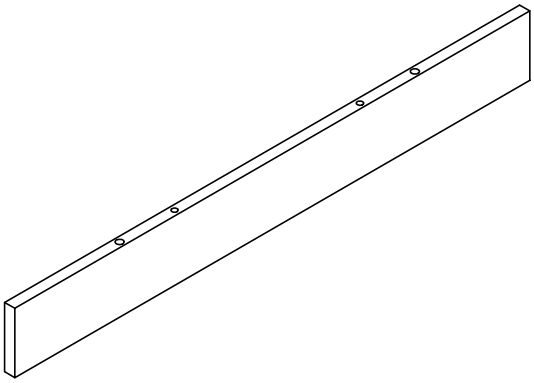

x2

5

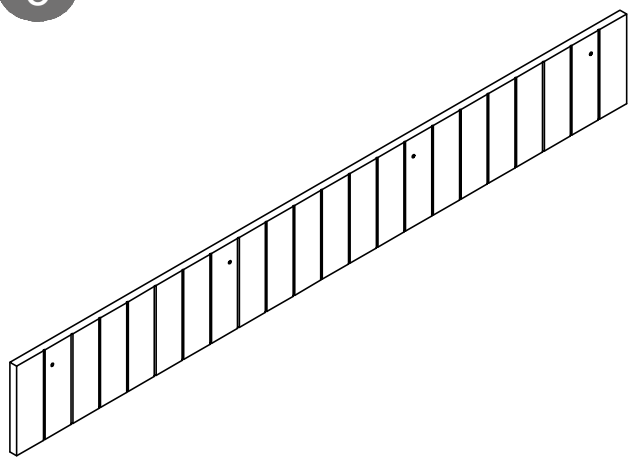

x1

6

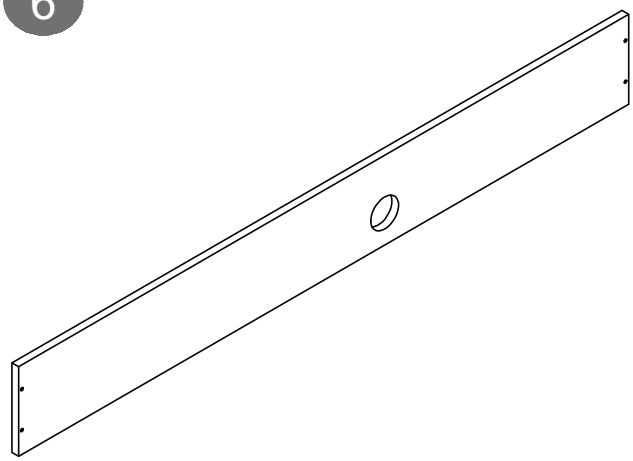

x1

Parts Identification

7

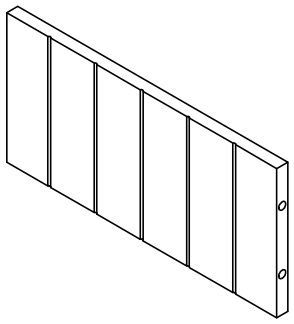

x1

8

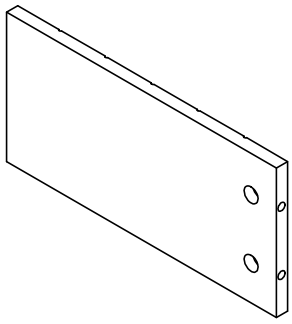

x1

9

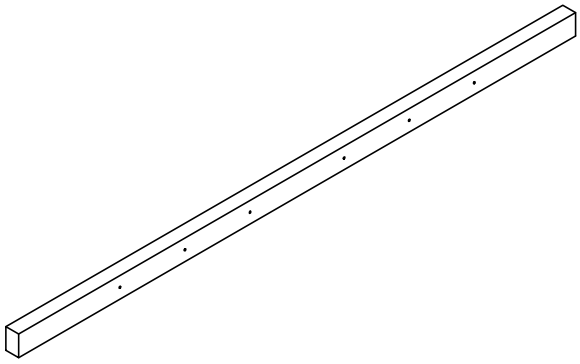

x1

10

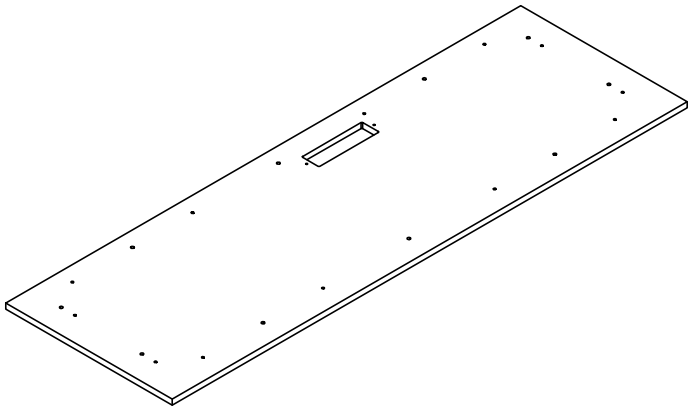

x1

11

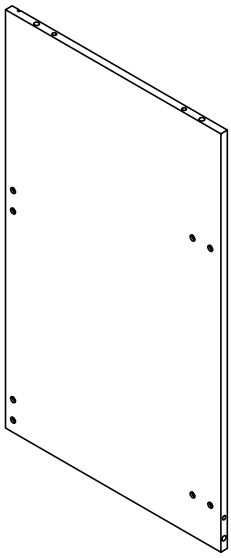

x1

12

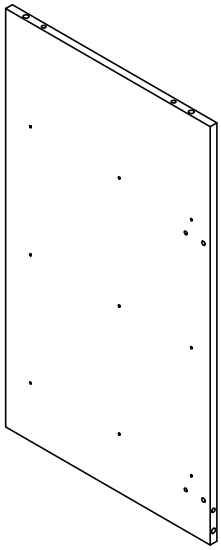

x1

Parts Identification

13

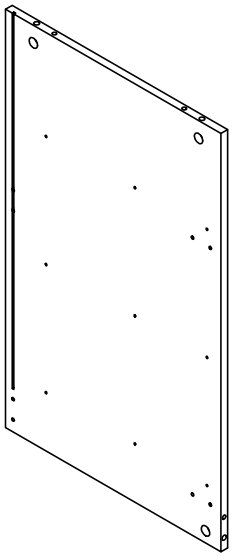

x1

14

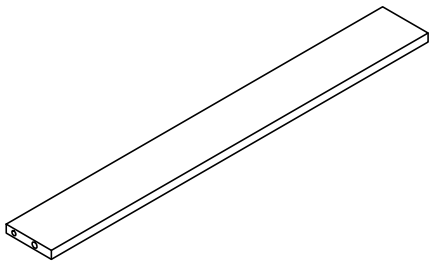

x4

15

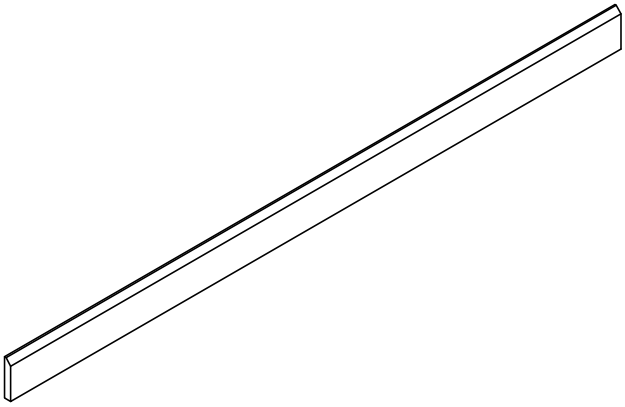

x1

16

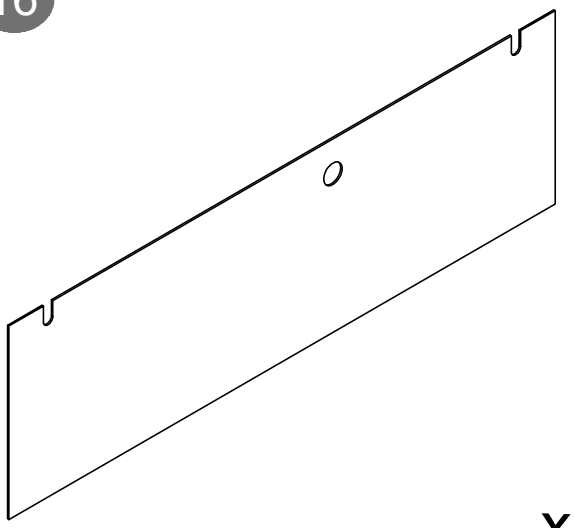

x1

17

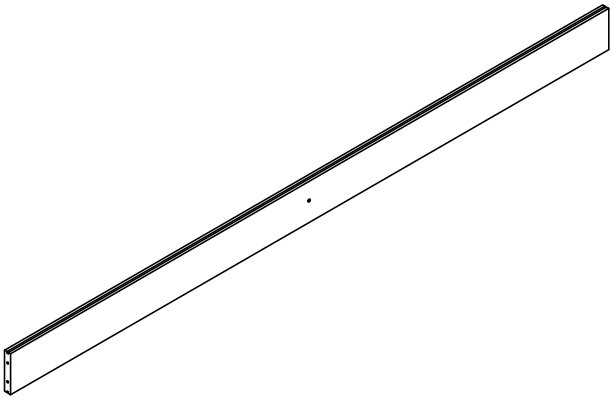

x1

18

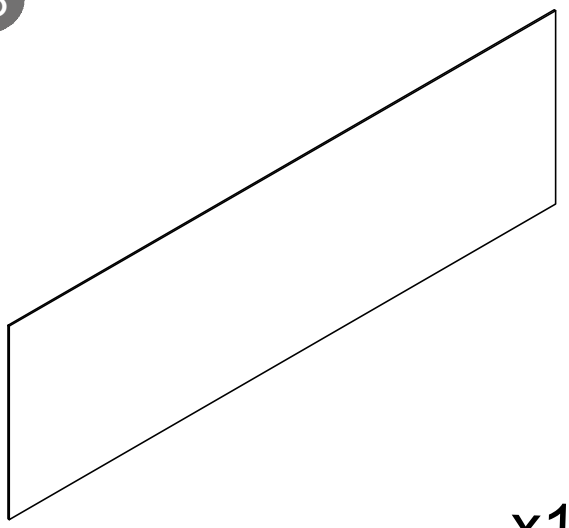

x1

Parts Identification

19

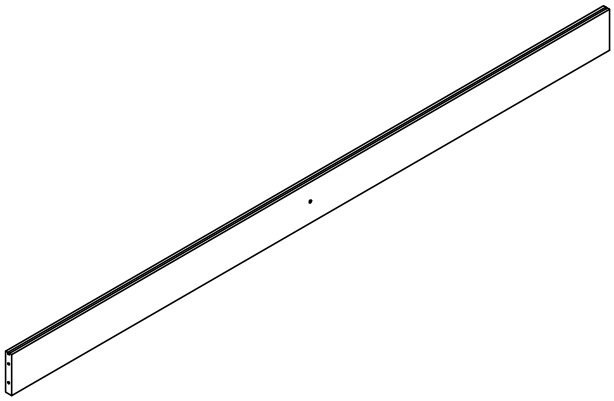

x1

20

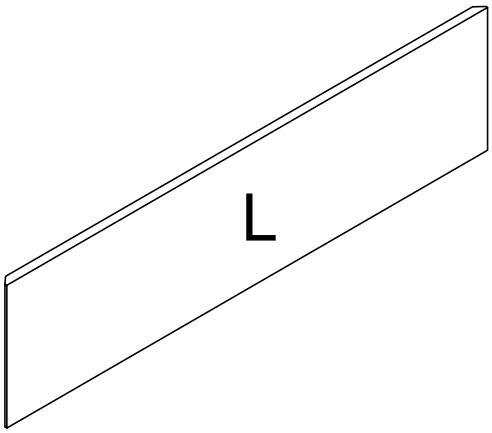

x1

21

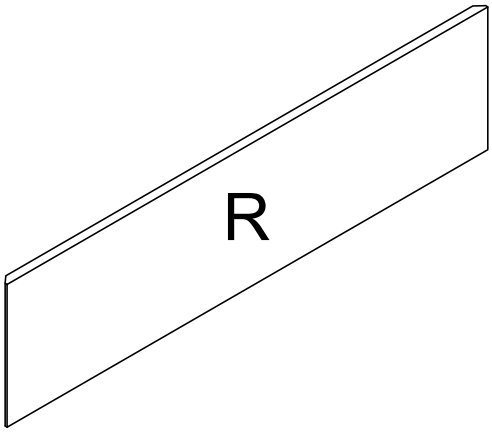

x1

22

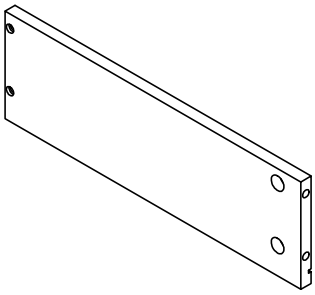

x2

23

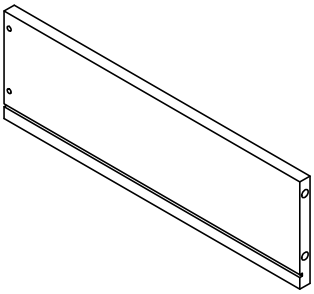

x2

24

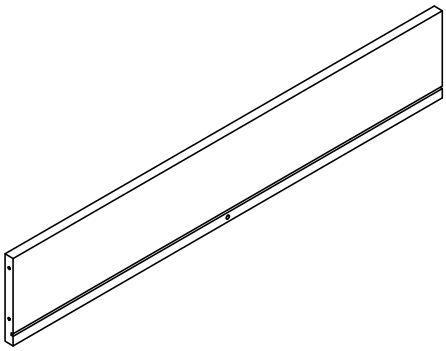

x2

Parts Identification

25

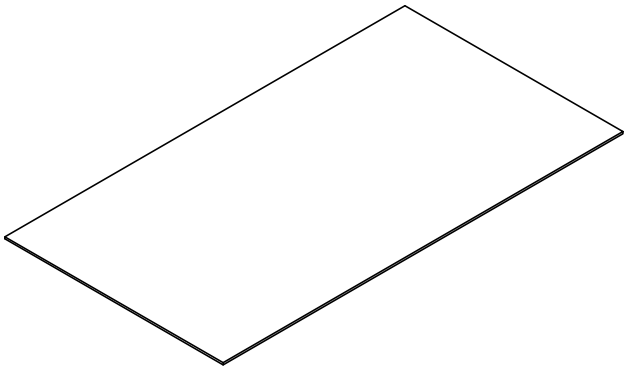

x6

26

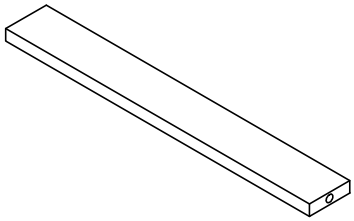

x6

27

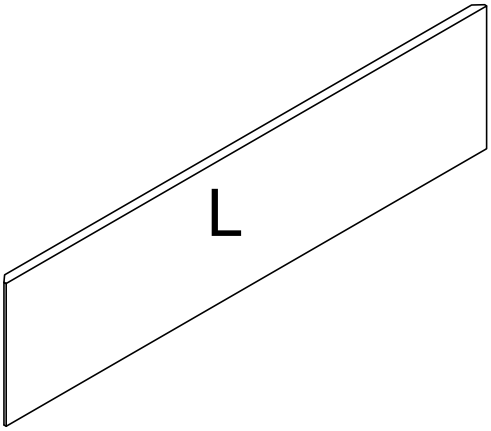

x2

28

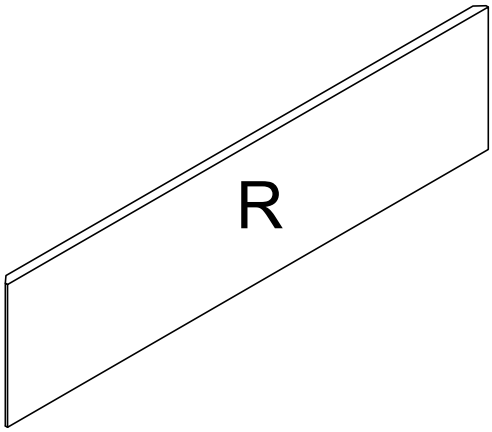

x2

29

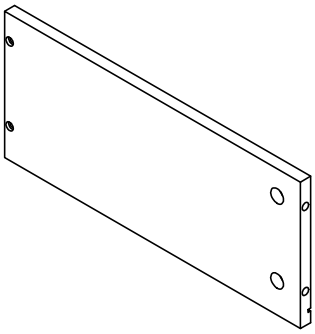

x4

30

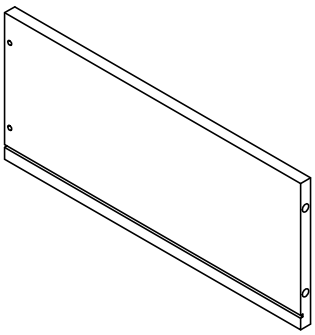

x4

Parts Identification

31

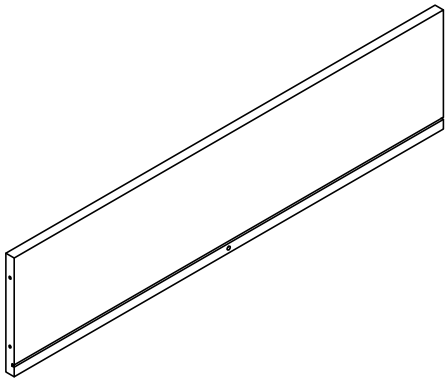

x4

M		4 pcs

Step 1

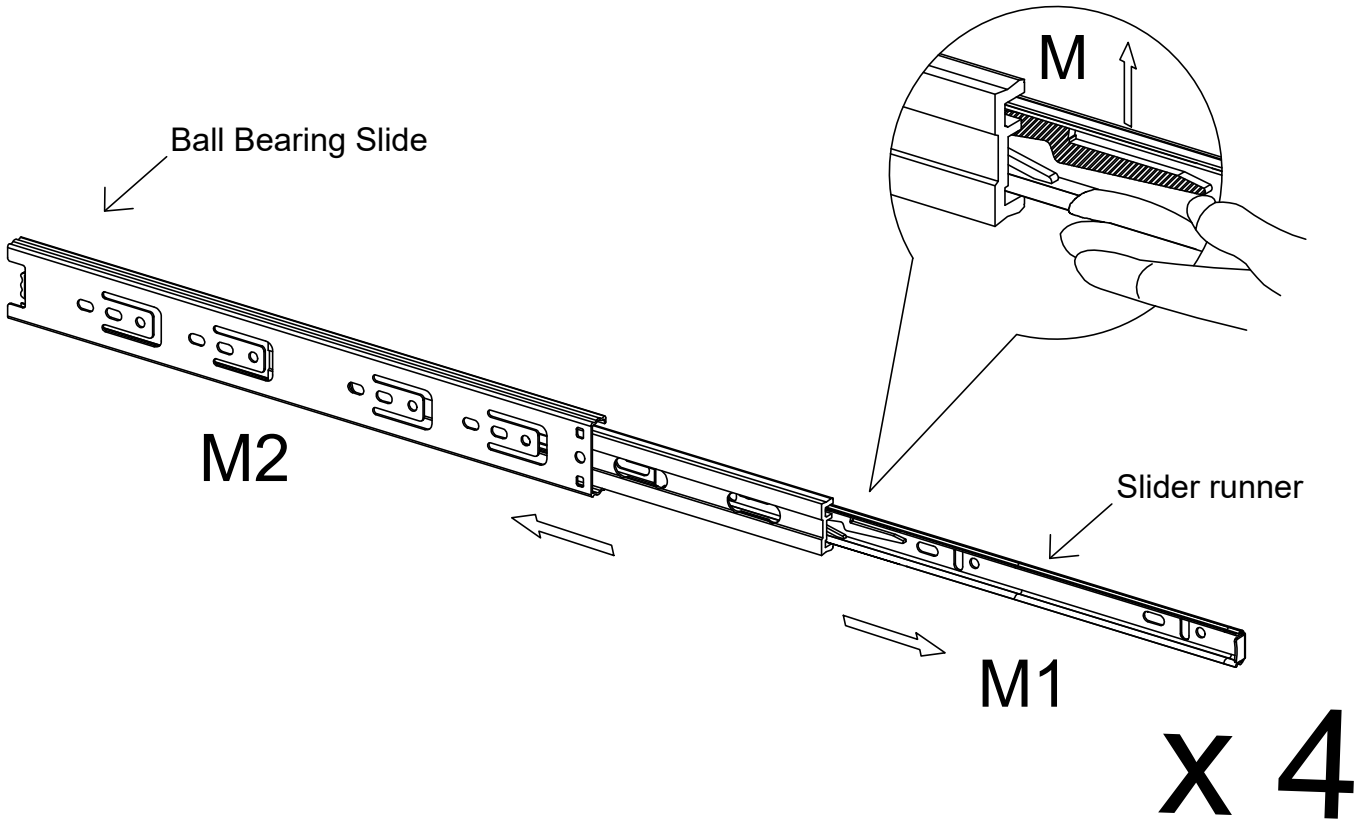

A		14 pcs

Step 2

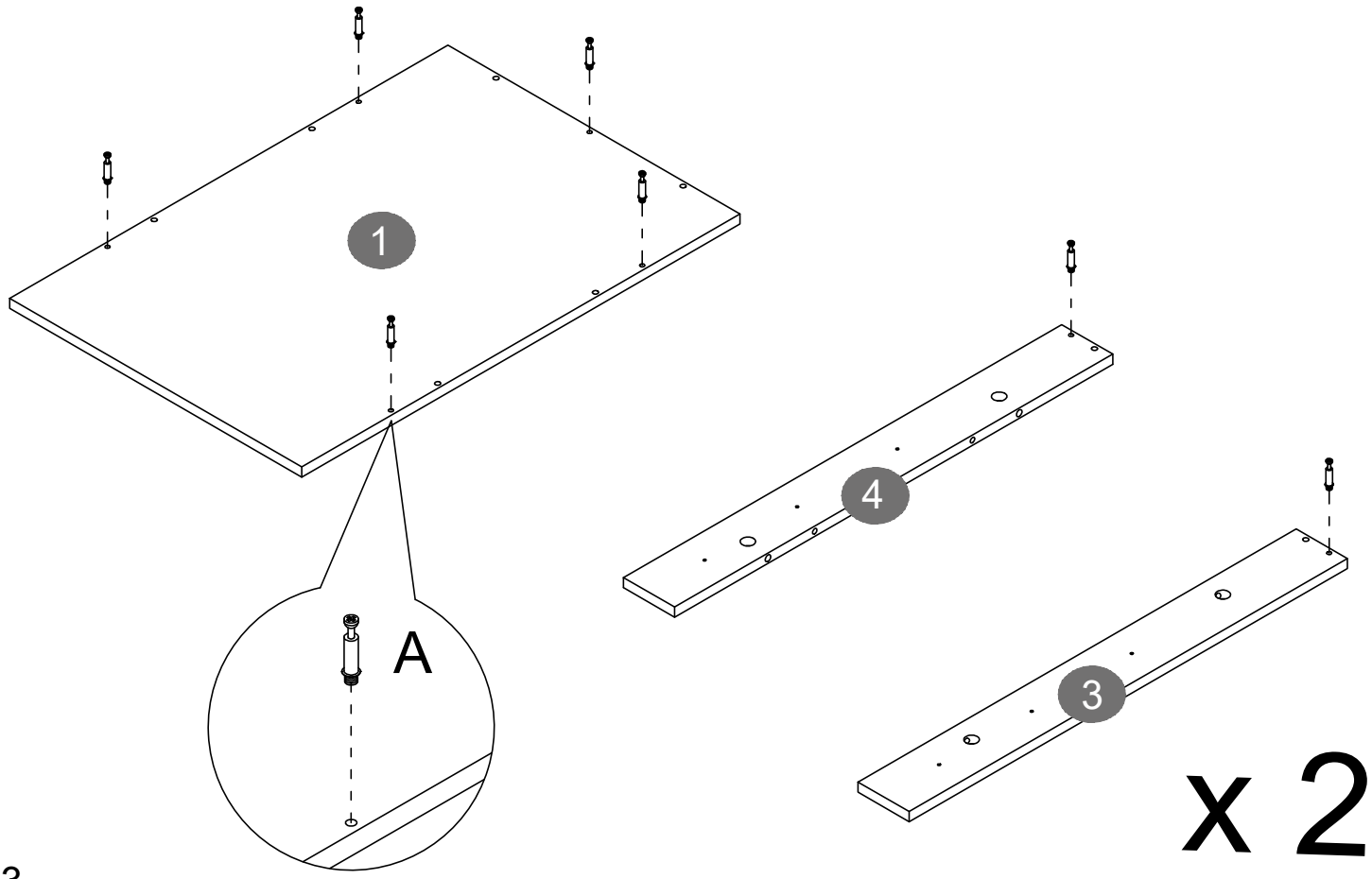

Step 3

B		4 pcs
C		4 pcs

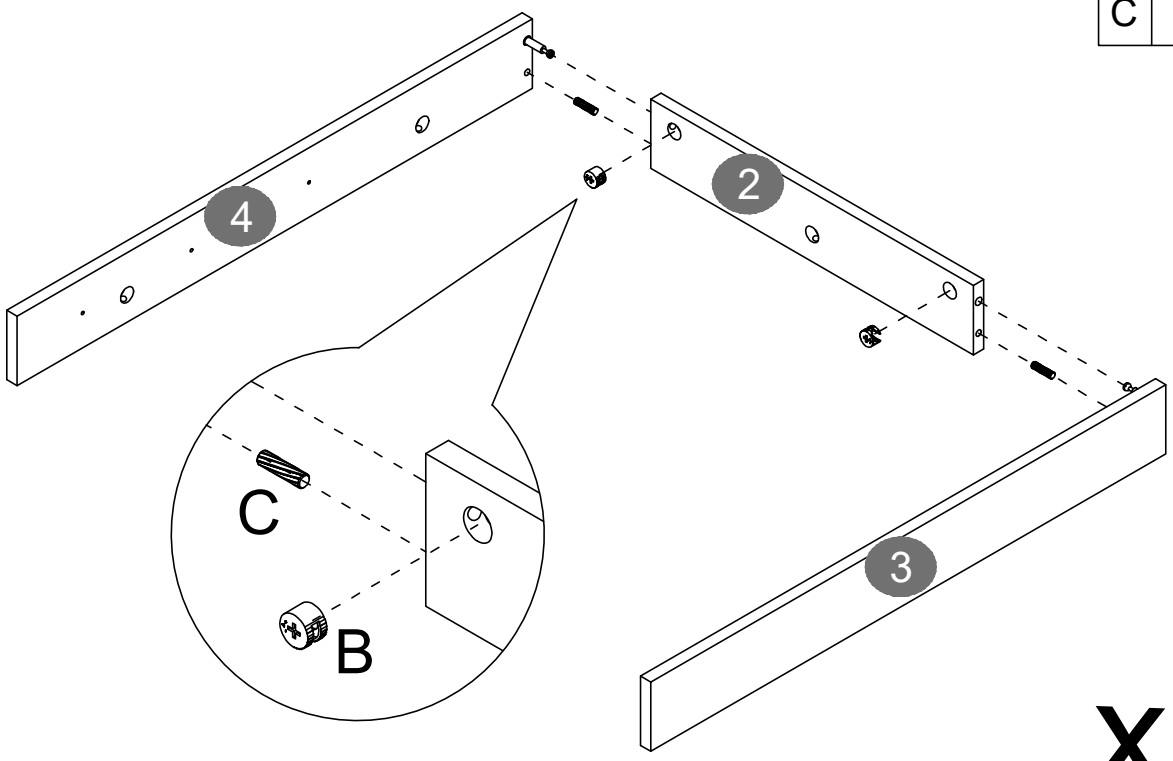

x 2

Step 4

B		10 pcs
C		12 pcs

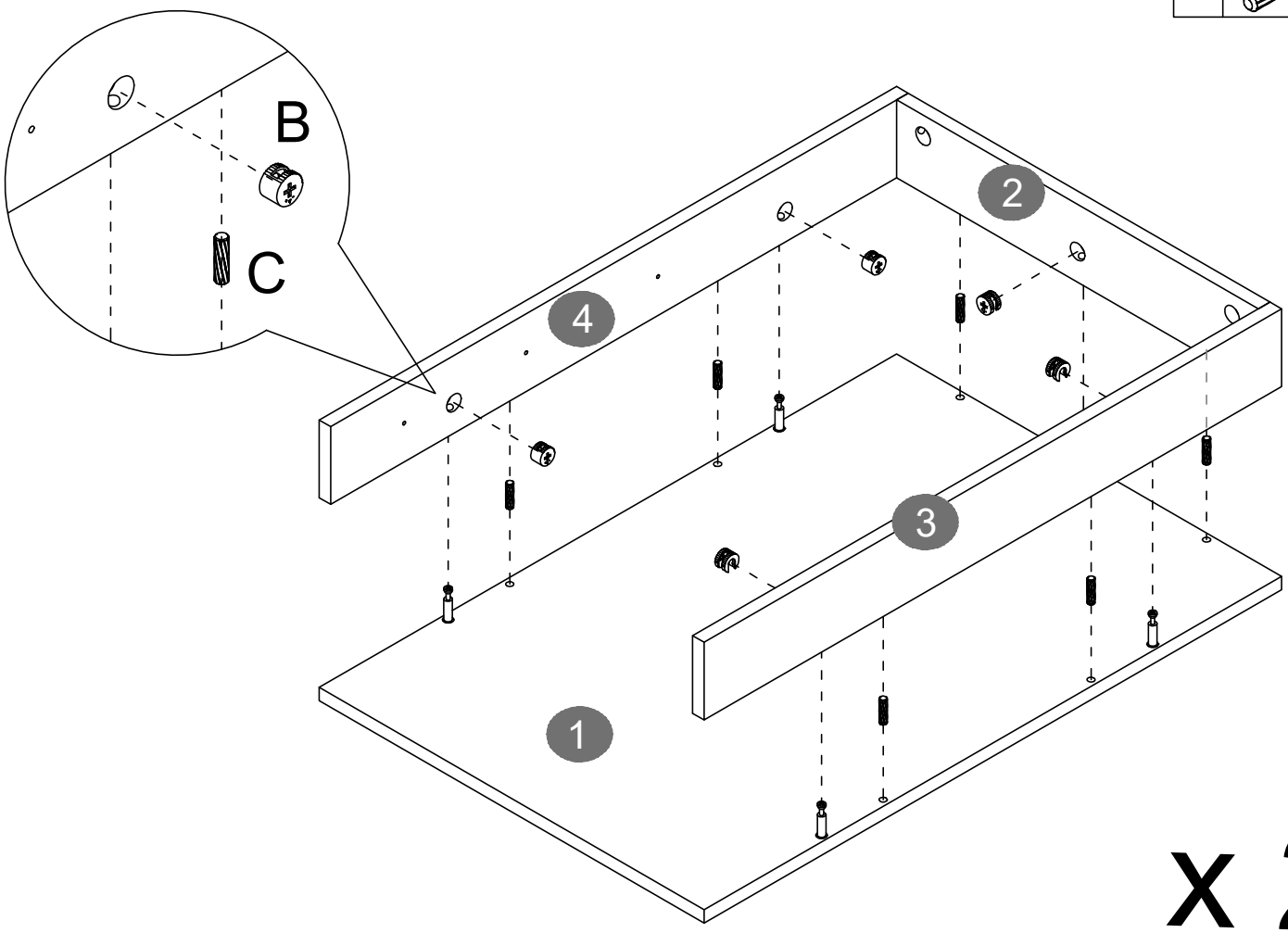

x 2

E		12 pcs

Step 5

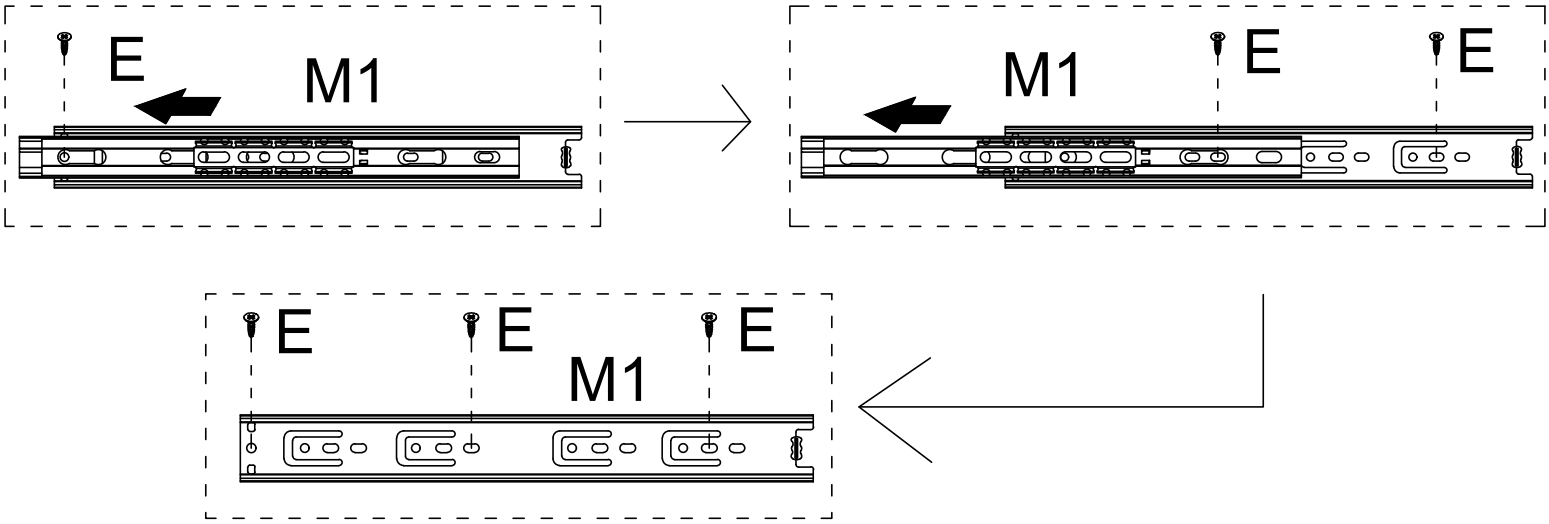

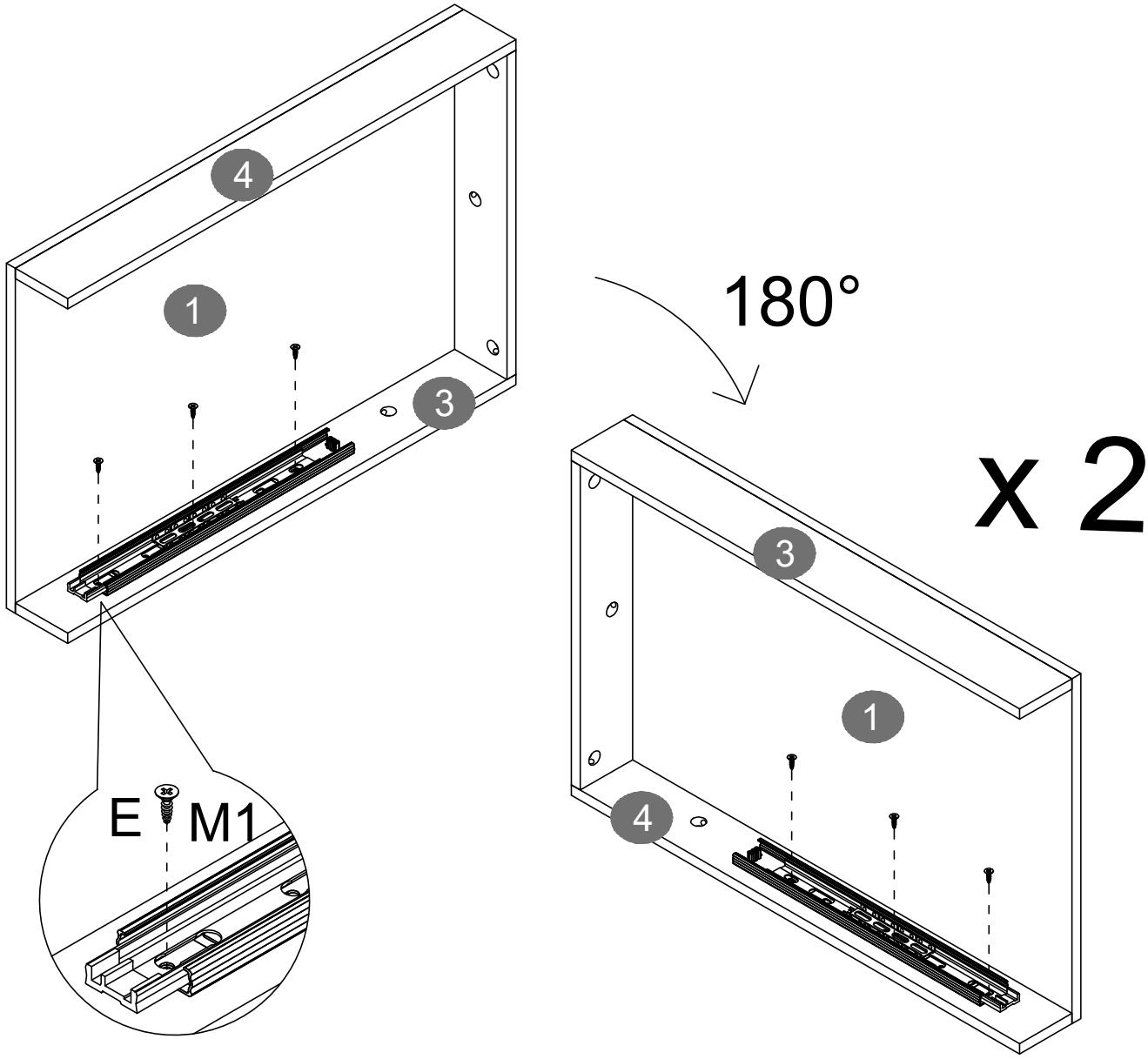

Step 6

P		4 pcs

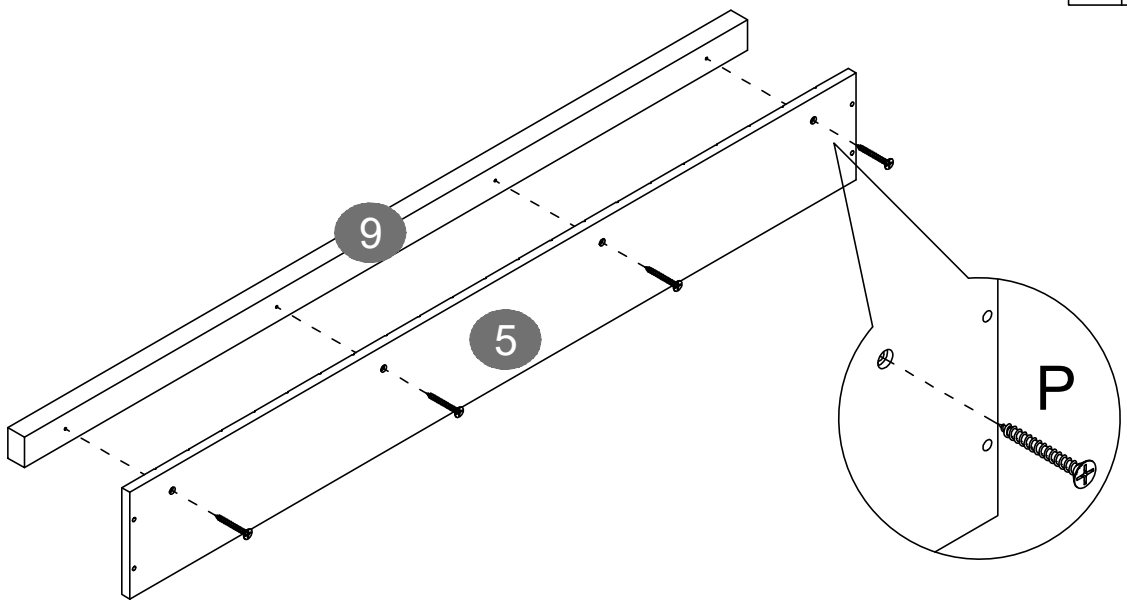

Step 7

E		12 pcs

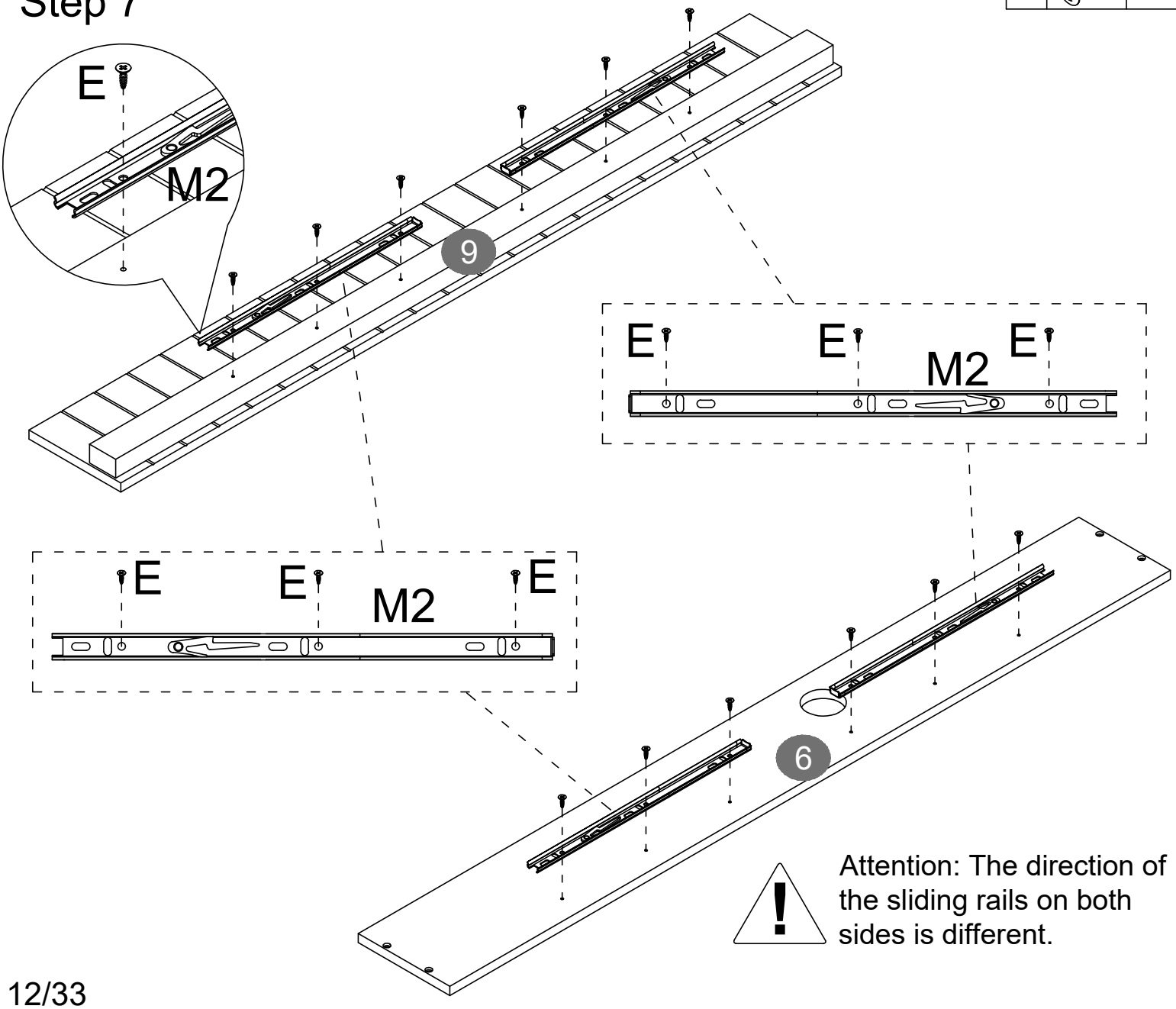

Attention: The direction of the sliding rails on both sides is different.

A		4 pcs

Step 8

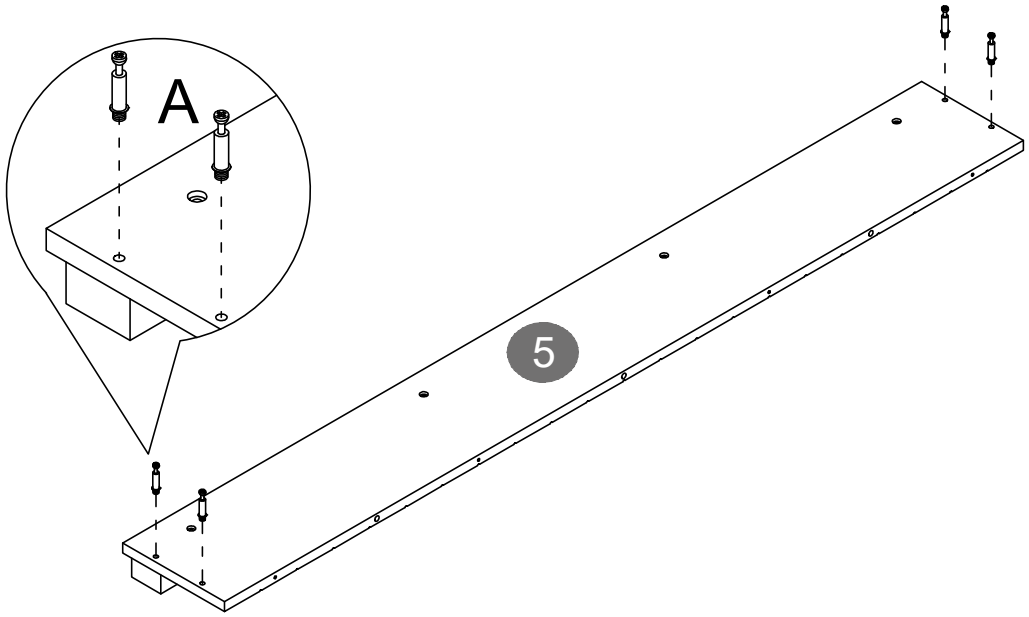

B		4 pcs
D		4 pcs

Step 9

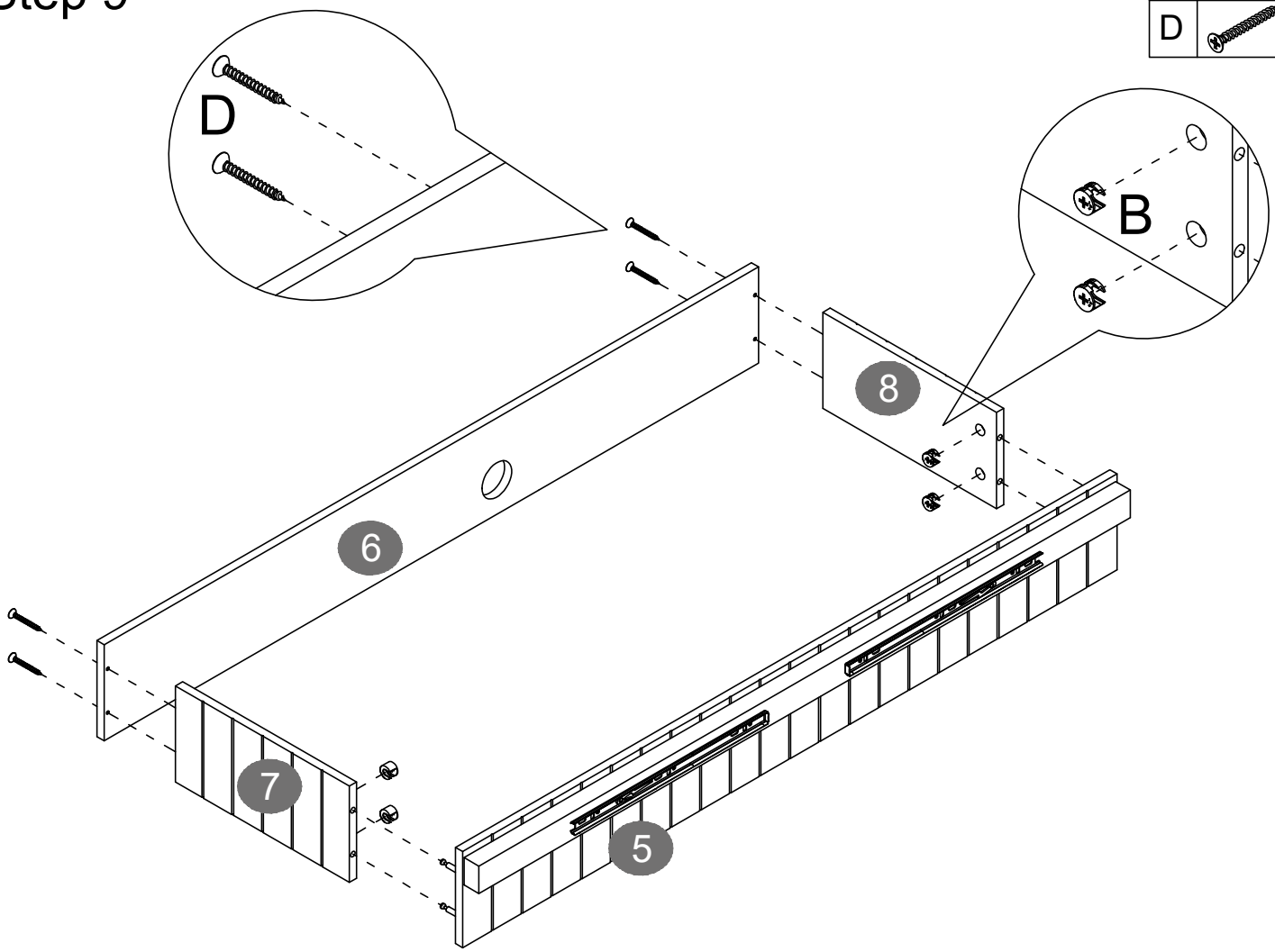

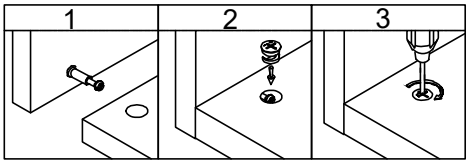

I		8 pcs

Step 10

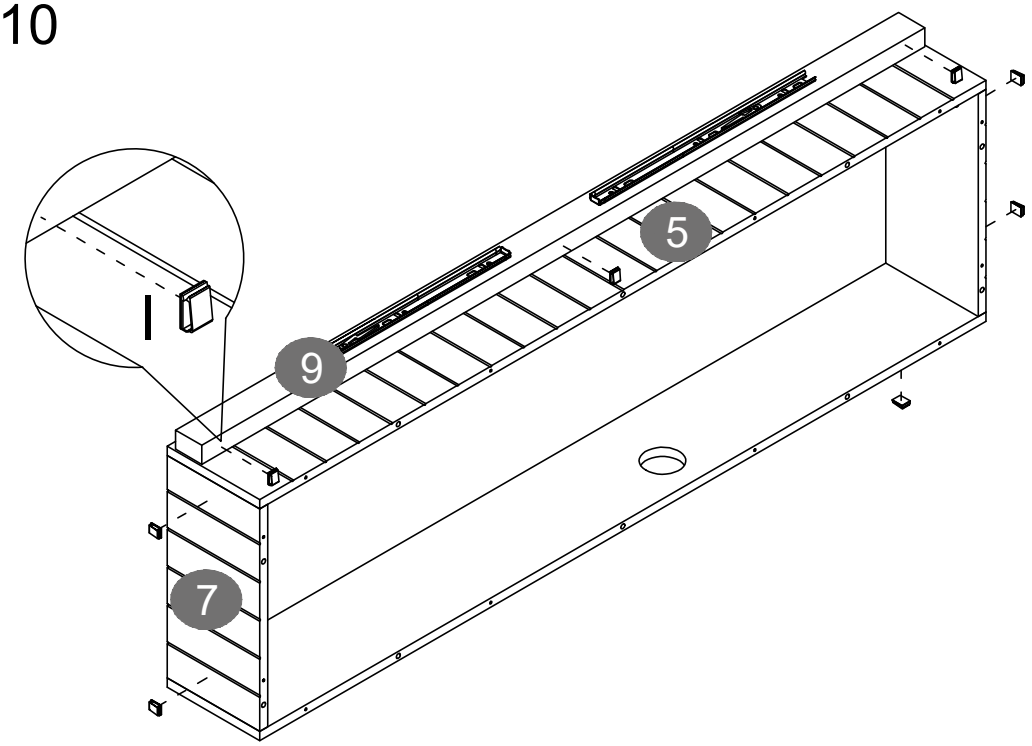

F		1 pc

Step 11

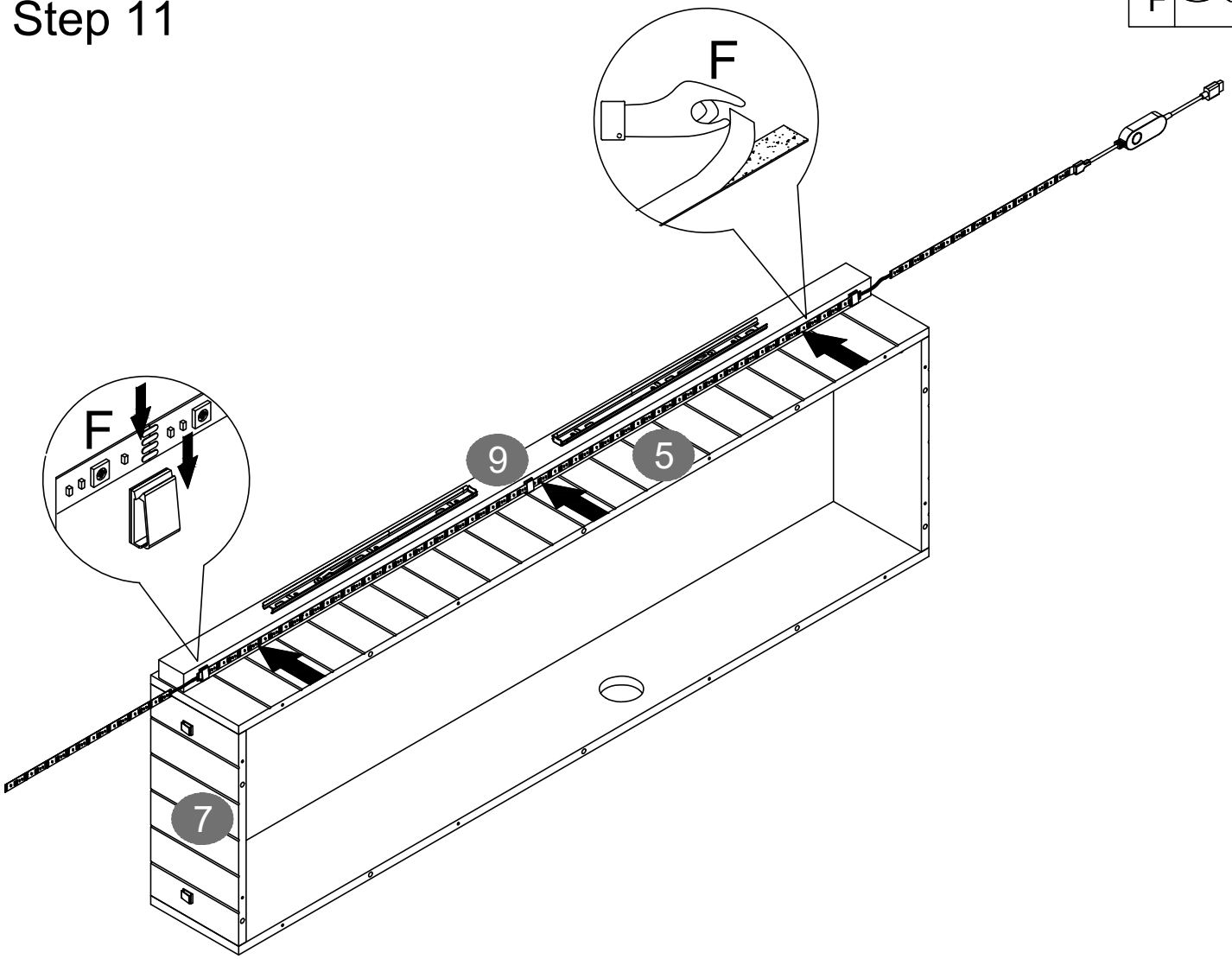

Step 12

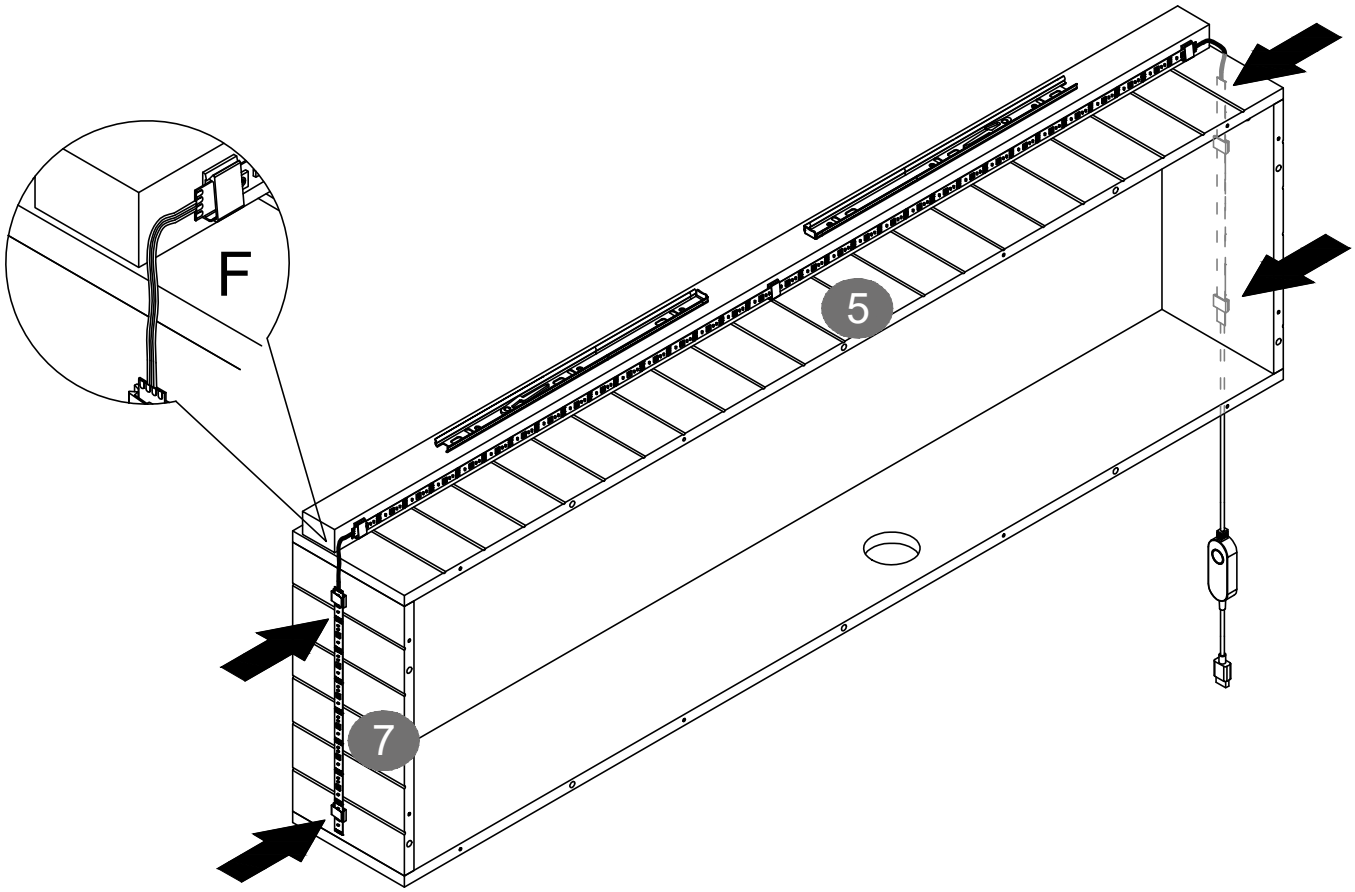

Step 13

G		1 pc
H		2 pcs

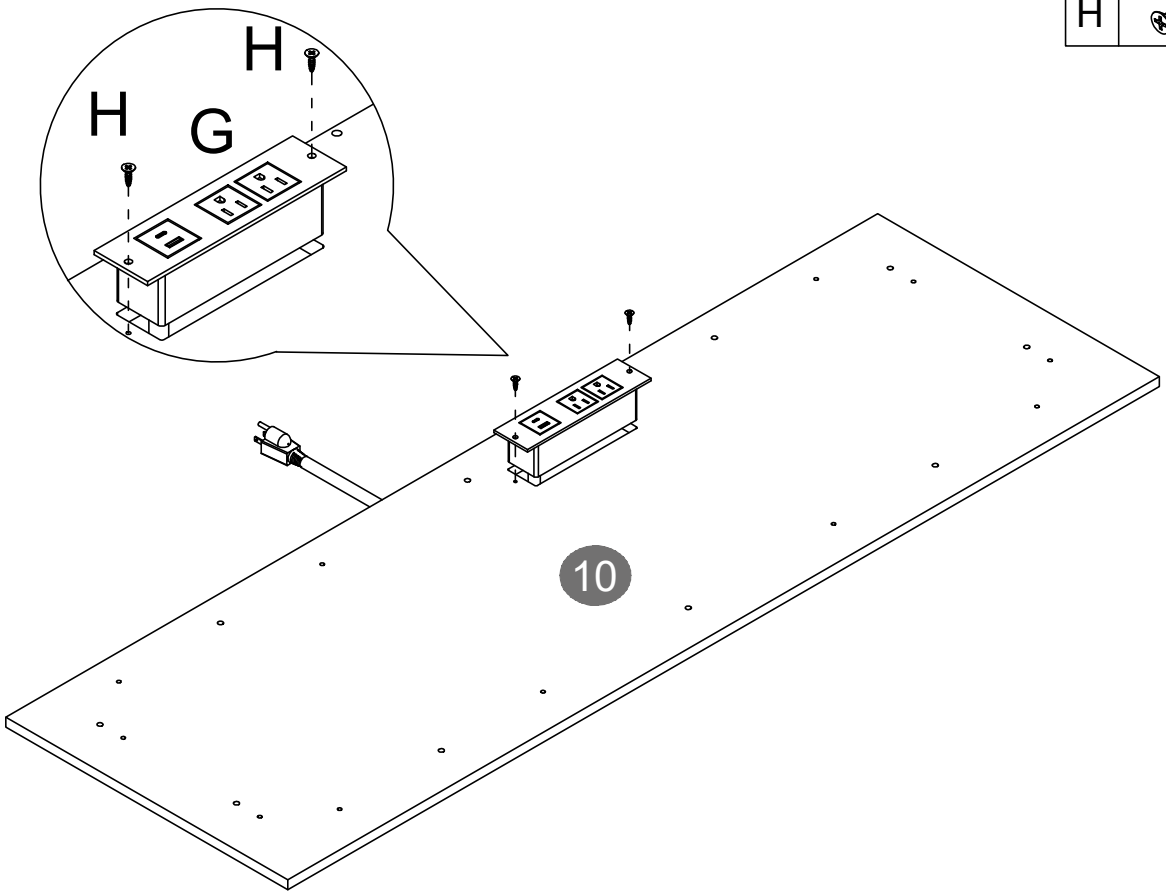

Step 14

C		10 pcs
D		12 pcs

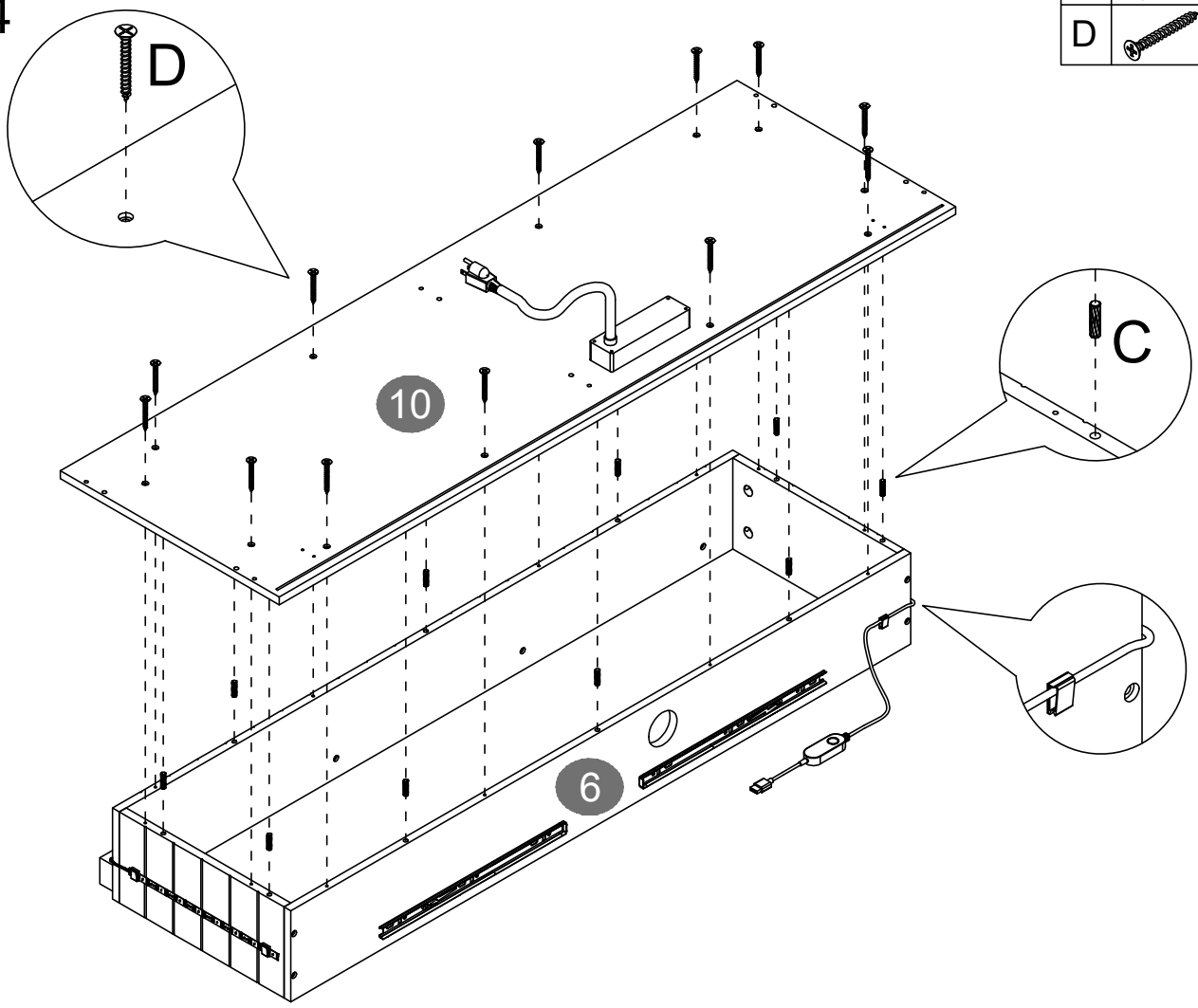

Step 15

A		6 pcs
J		2 pcs

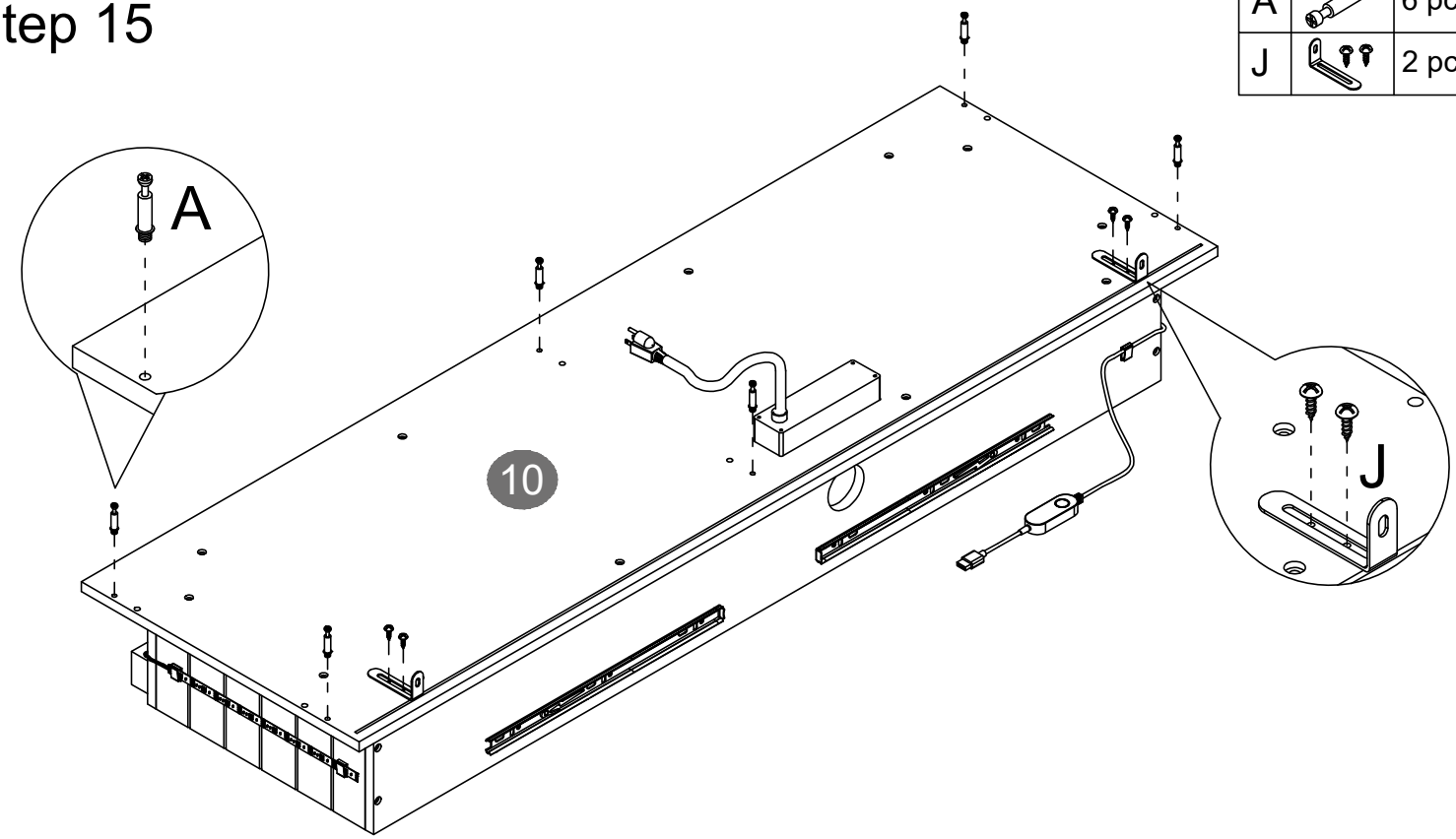

Step 16

E		9 pcs
CL		3 pcs

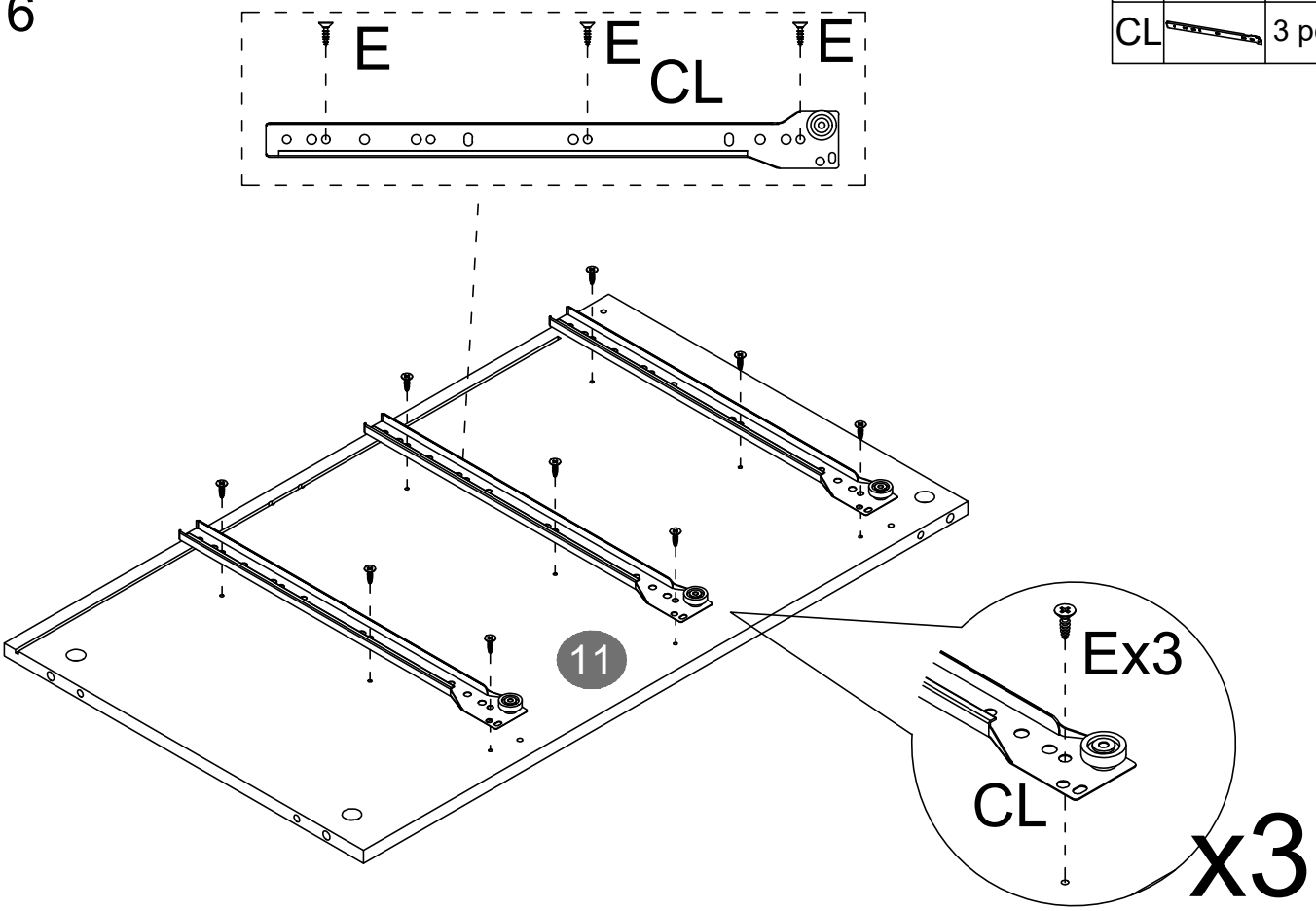

Step 17

E		9 pcs
CR		3 pcs

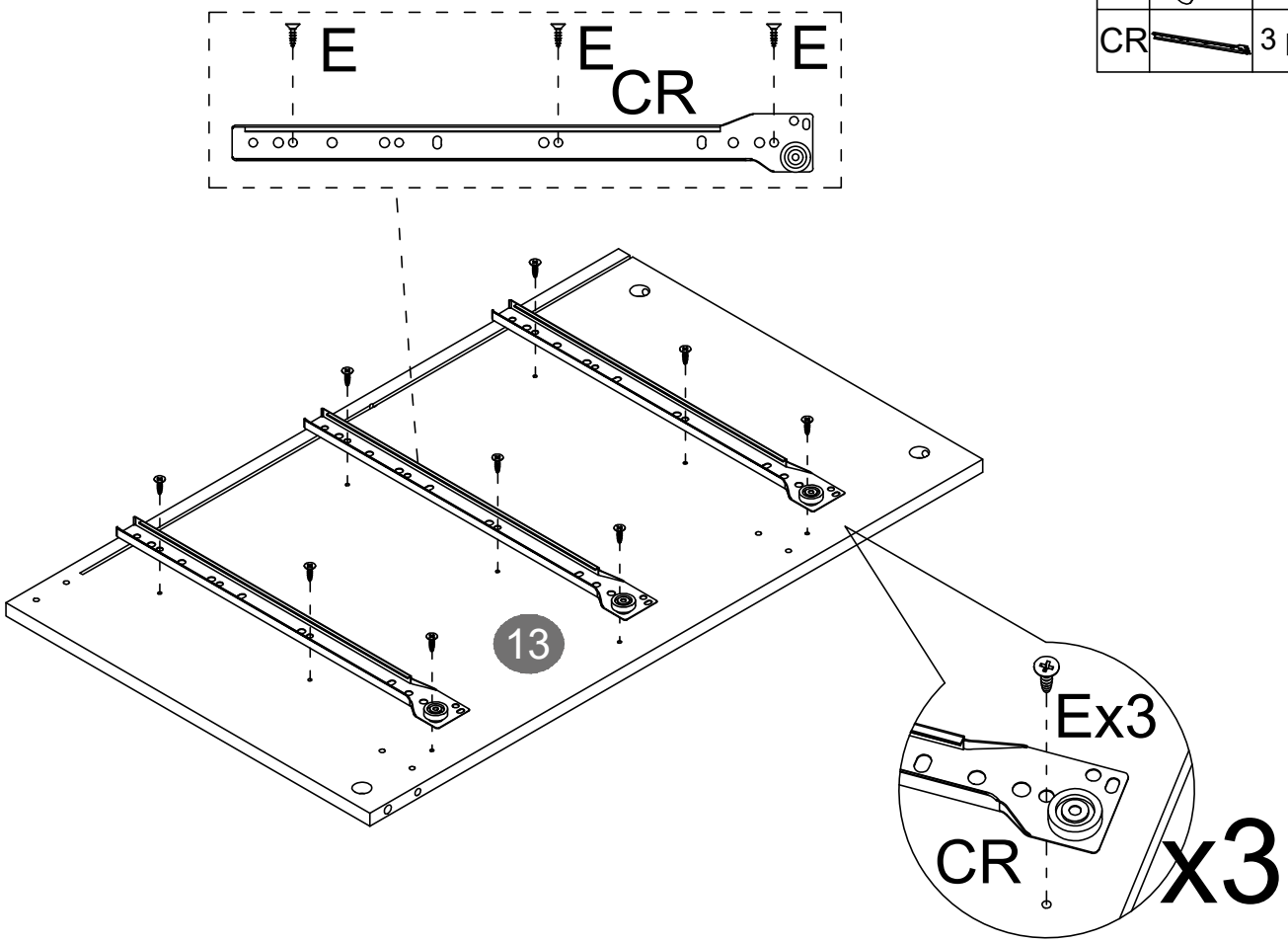

A		2 pcs
E		18 pcs
CL		3 pcs
CR		3 pcs

Step 18

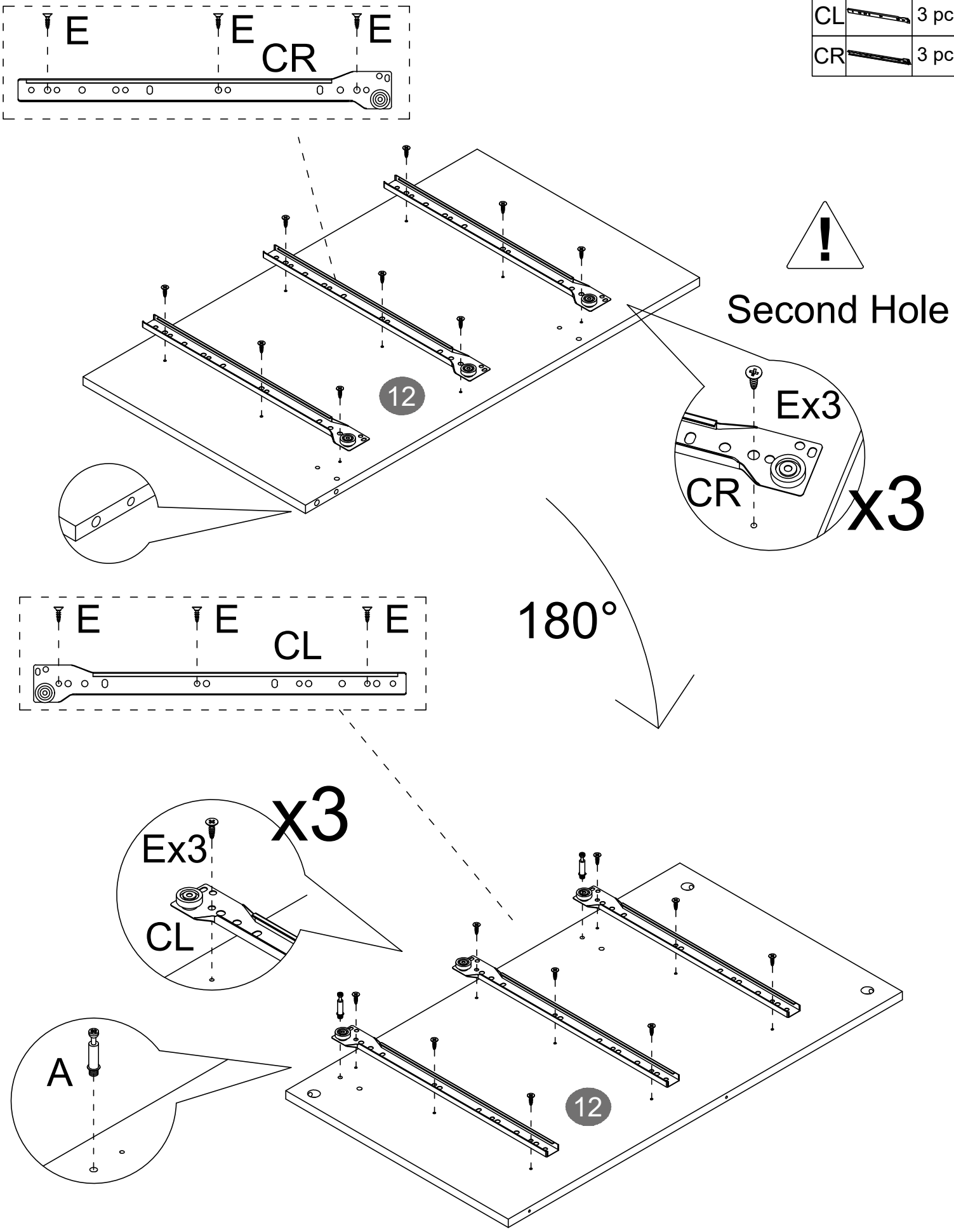

Step 19

B		2 pcs
C		2 pcs

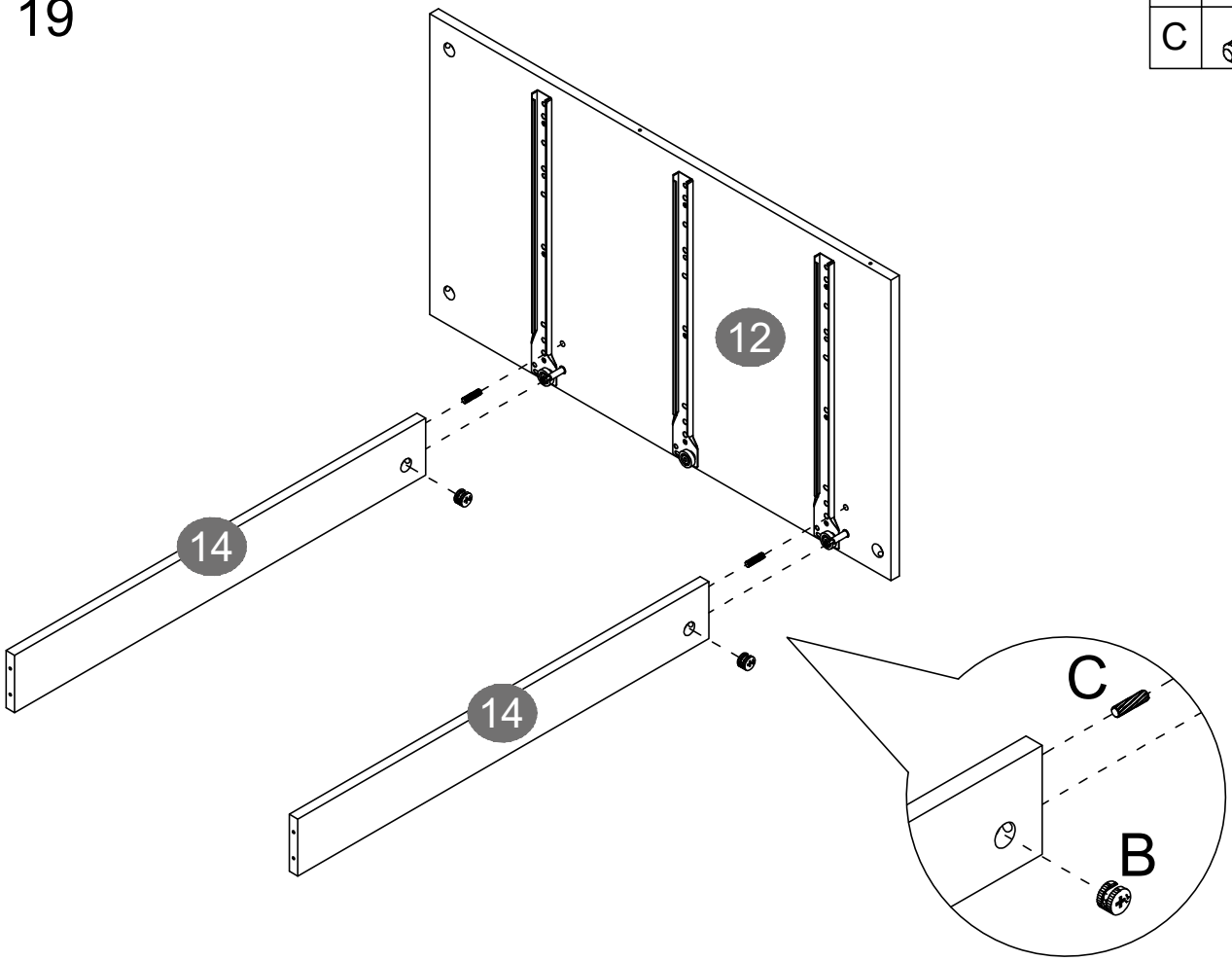

Step 20

A		2 pcs

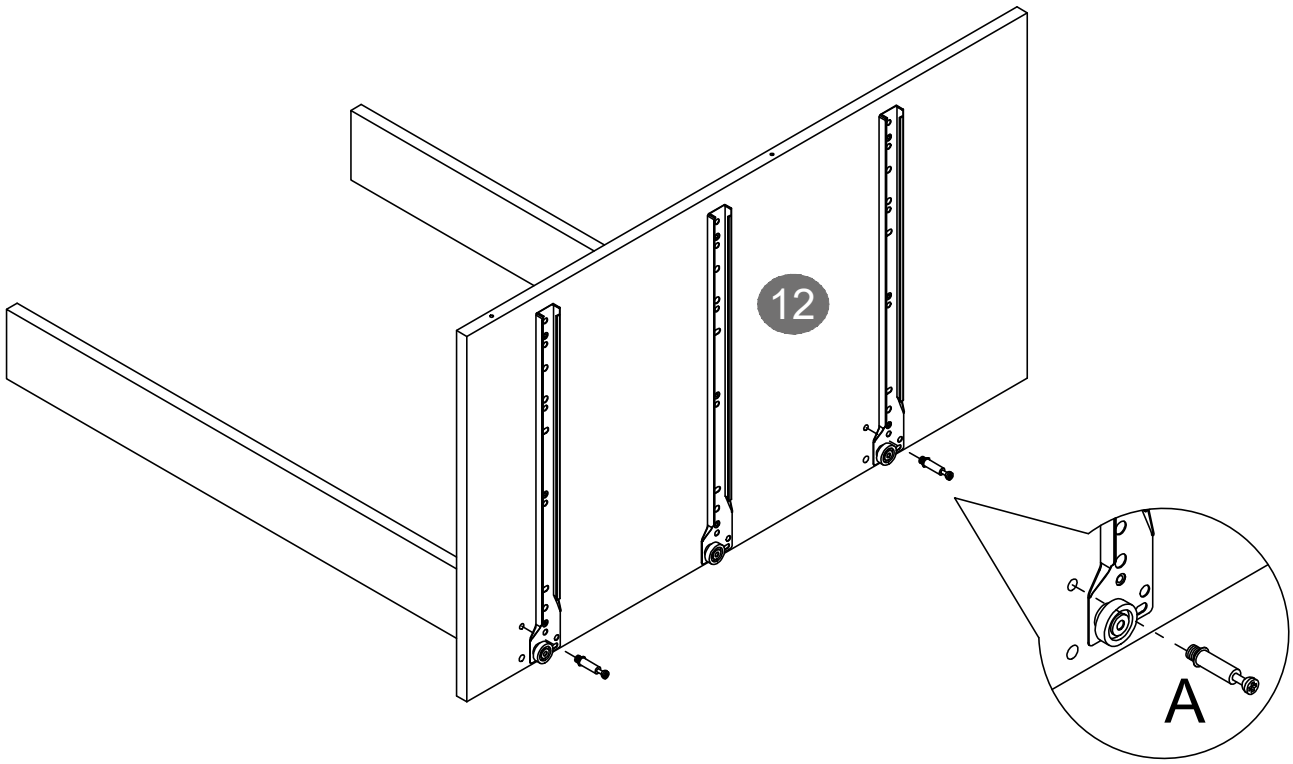

Step 21

B		2 pcs
C		2 pcs

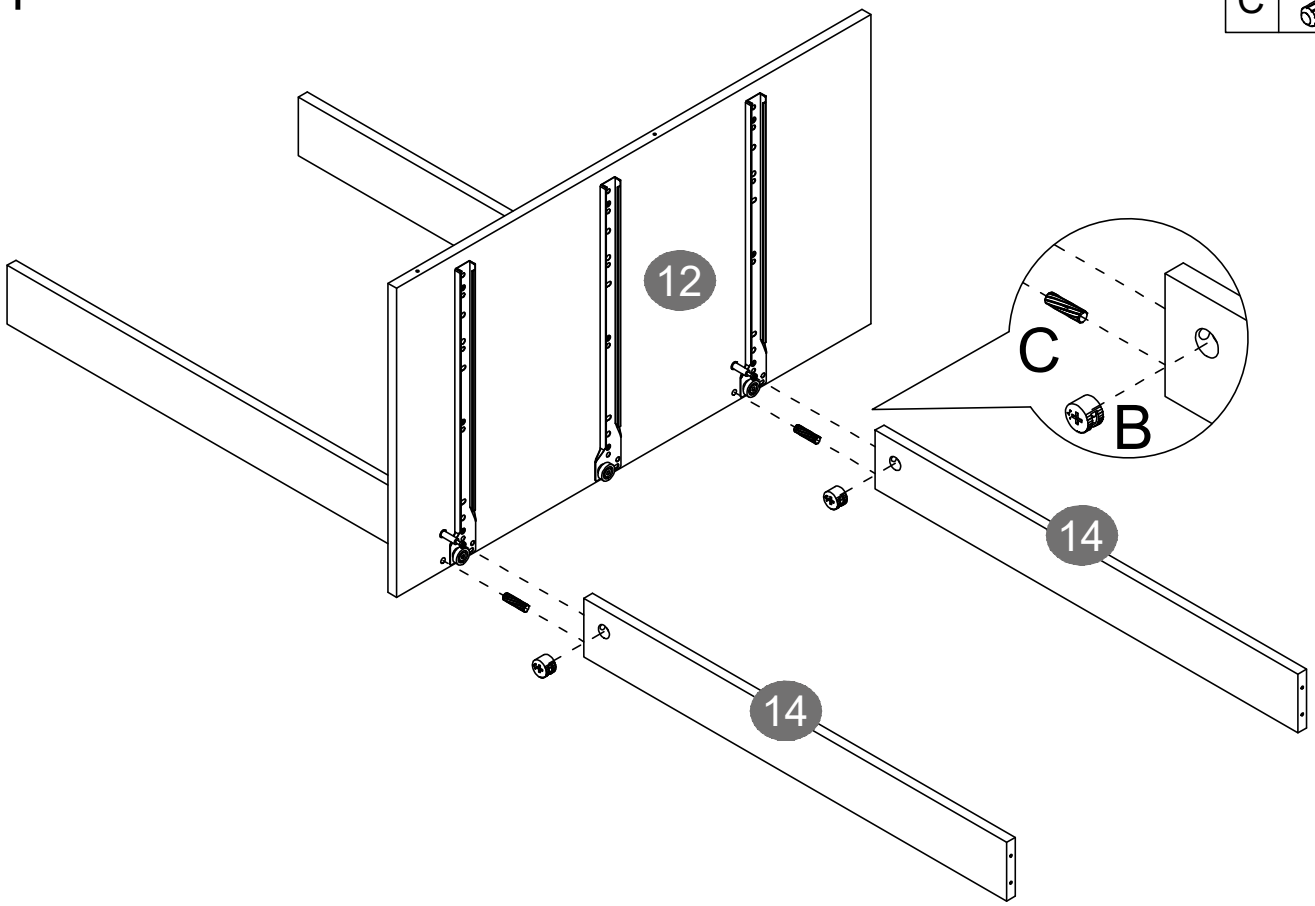

Step 22

D		1 pc
O		12 pcs

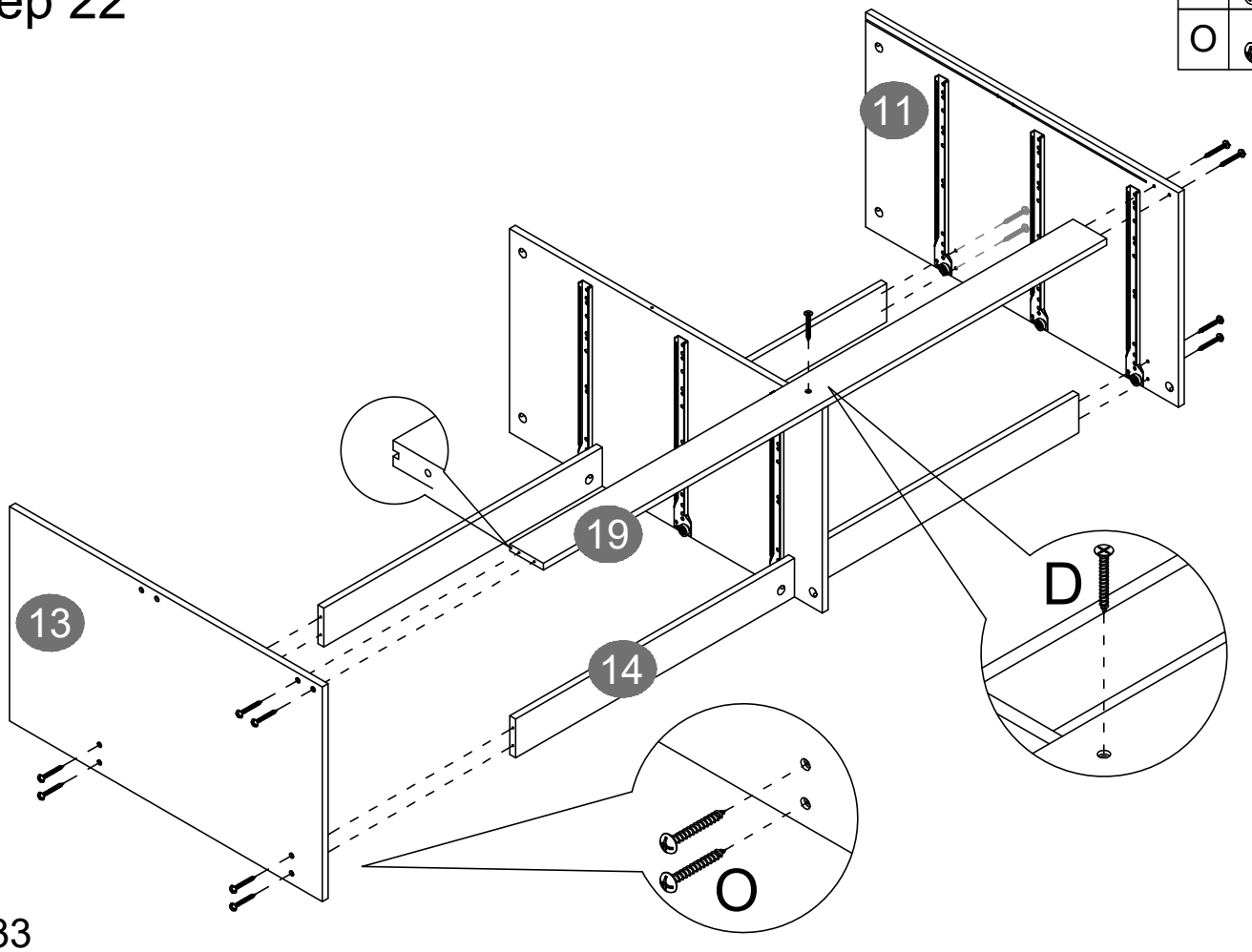

Step 23

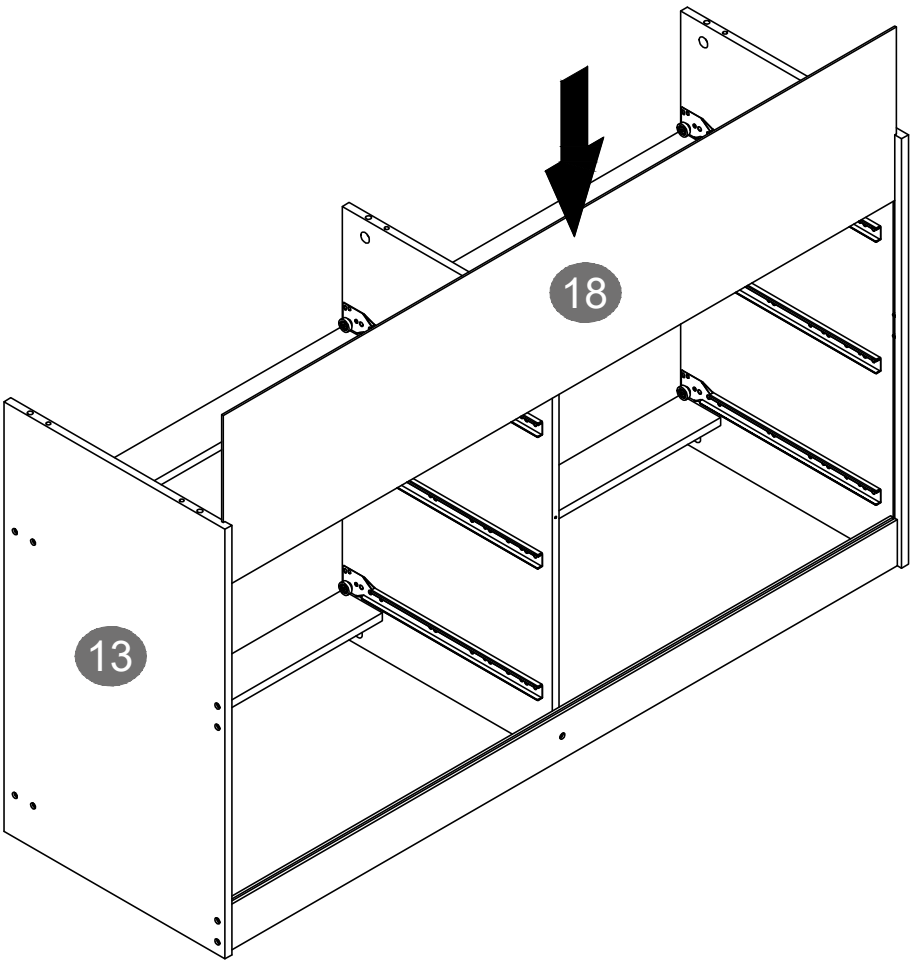

Step 24

D		1 pc
O		4 pcs

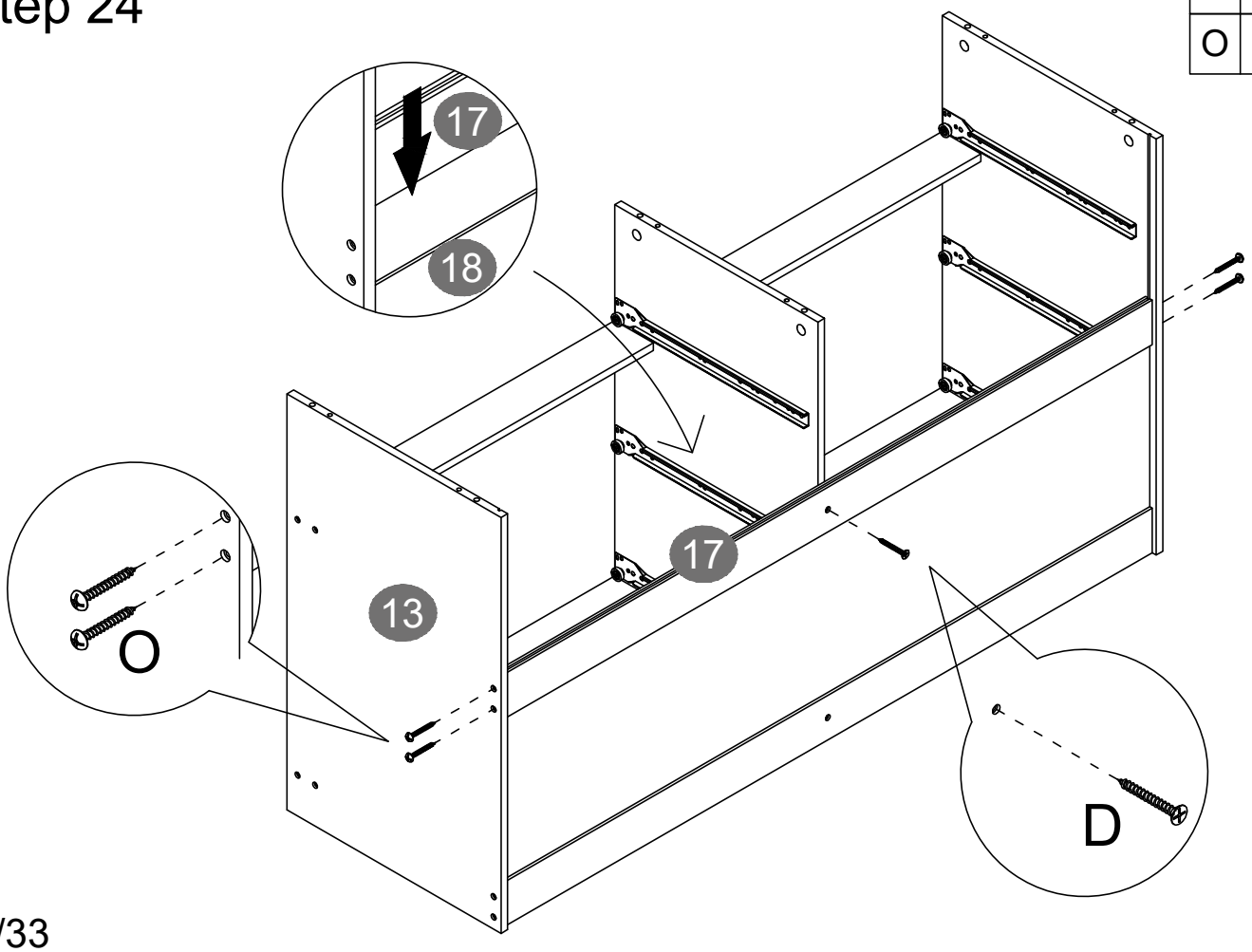

A		3 pcs

Step 25

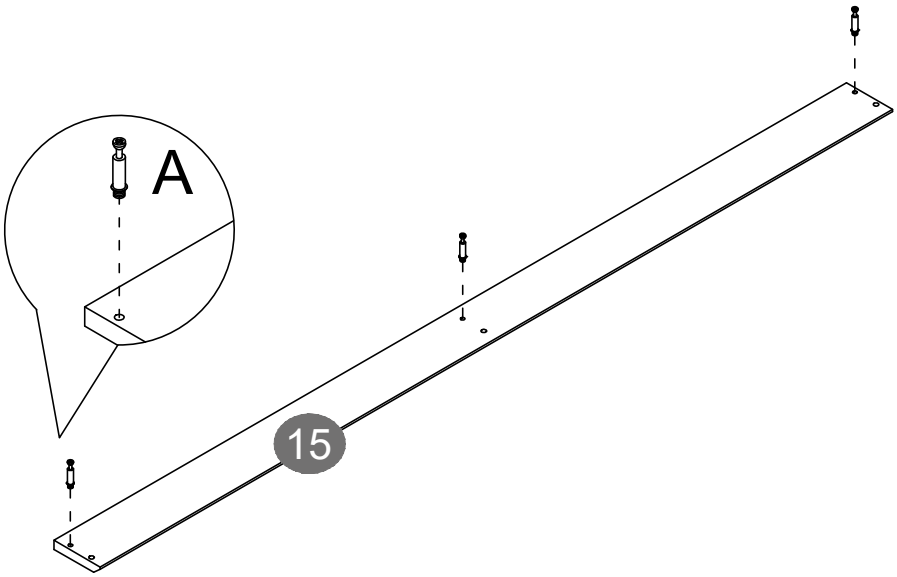

B		3 pcs
C		3 pcs

Step 26

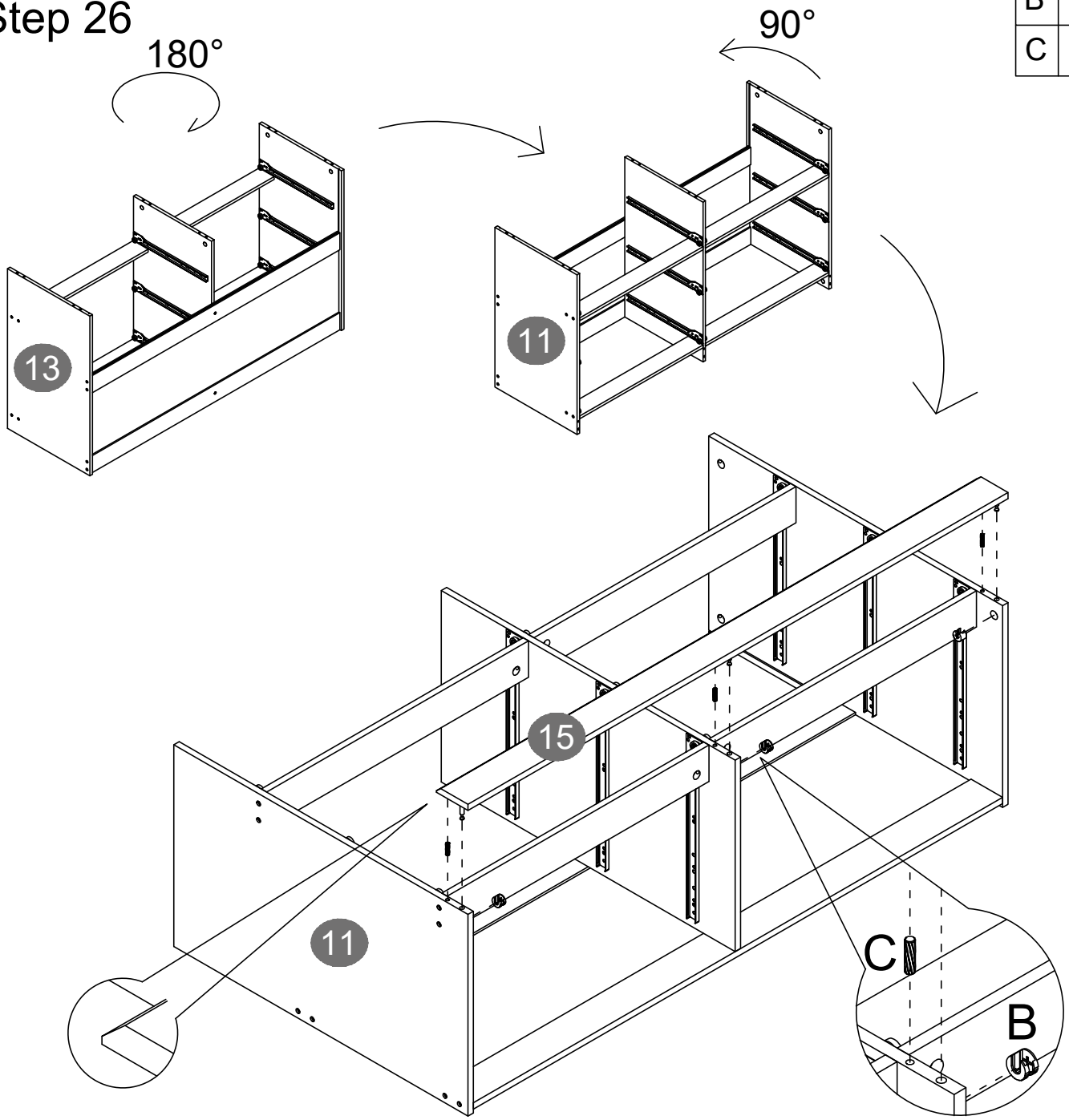

Step 27

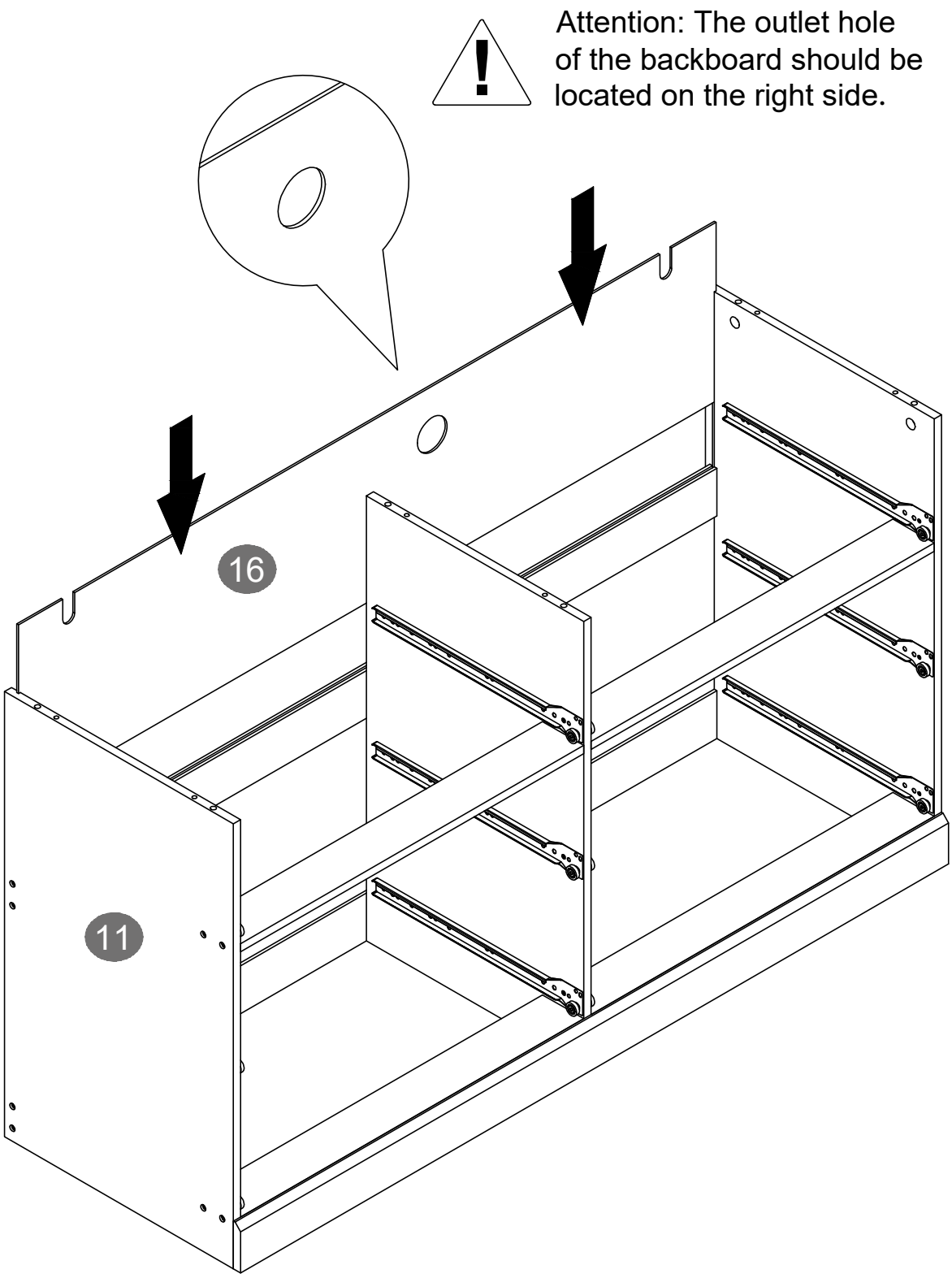
Attention: The outlet hole of the backboard should be located on the right side.
16
11

Step 28

B		6 pcs
C		6 pcs

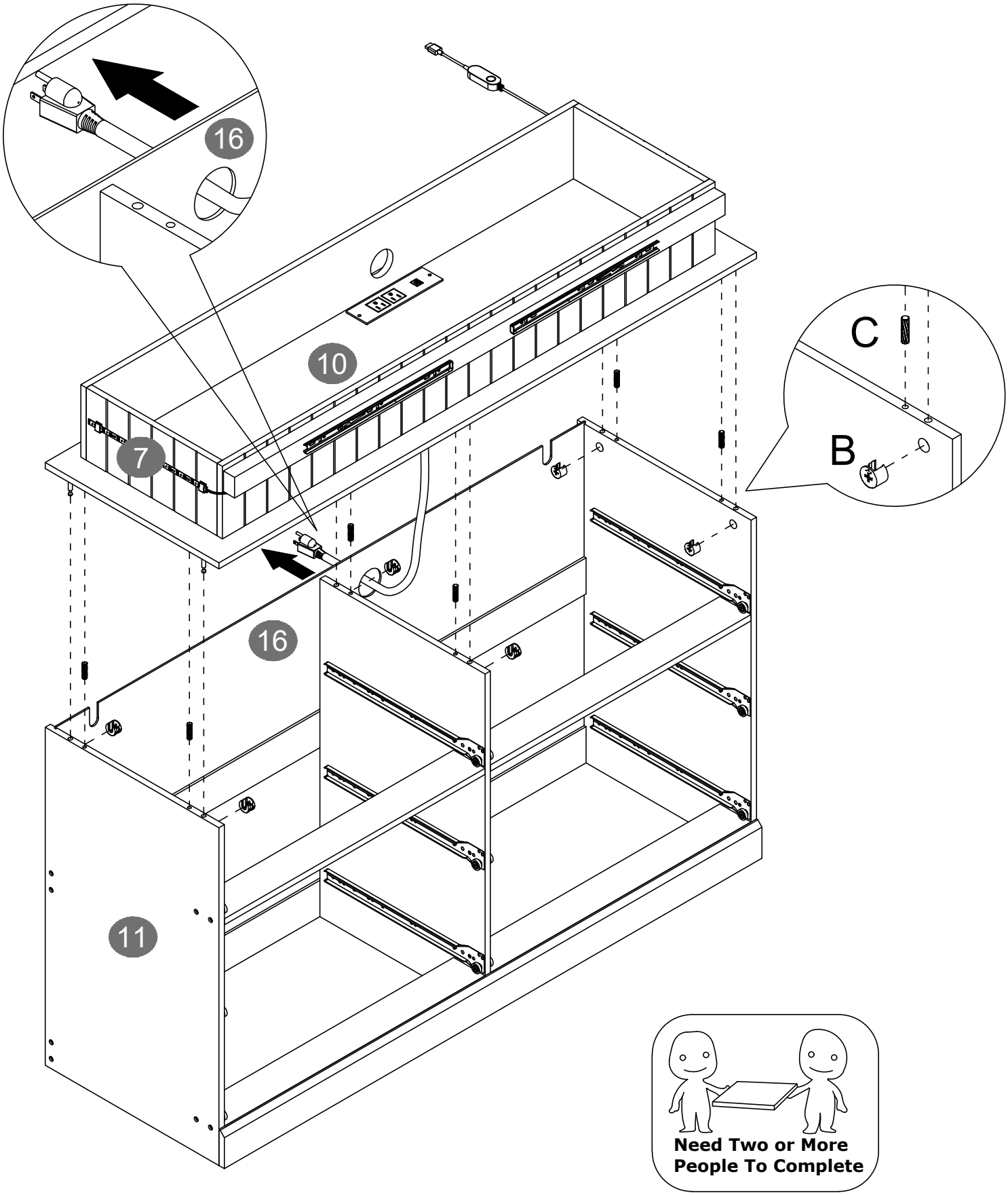

Step 29

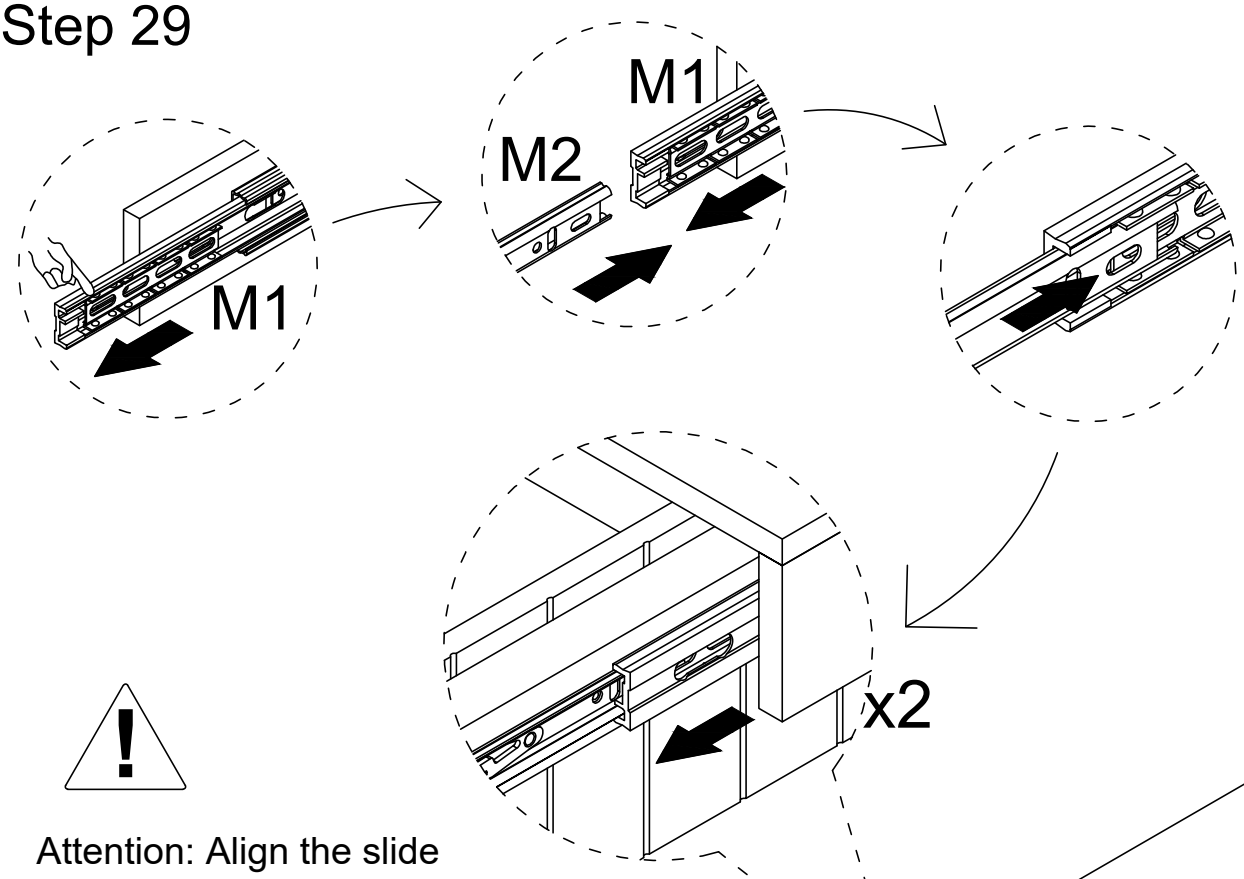

Attention: Align the slide runners on the drawer with the unit and push it carefully inside until it stops.

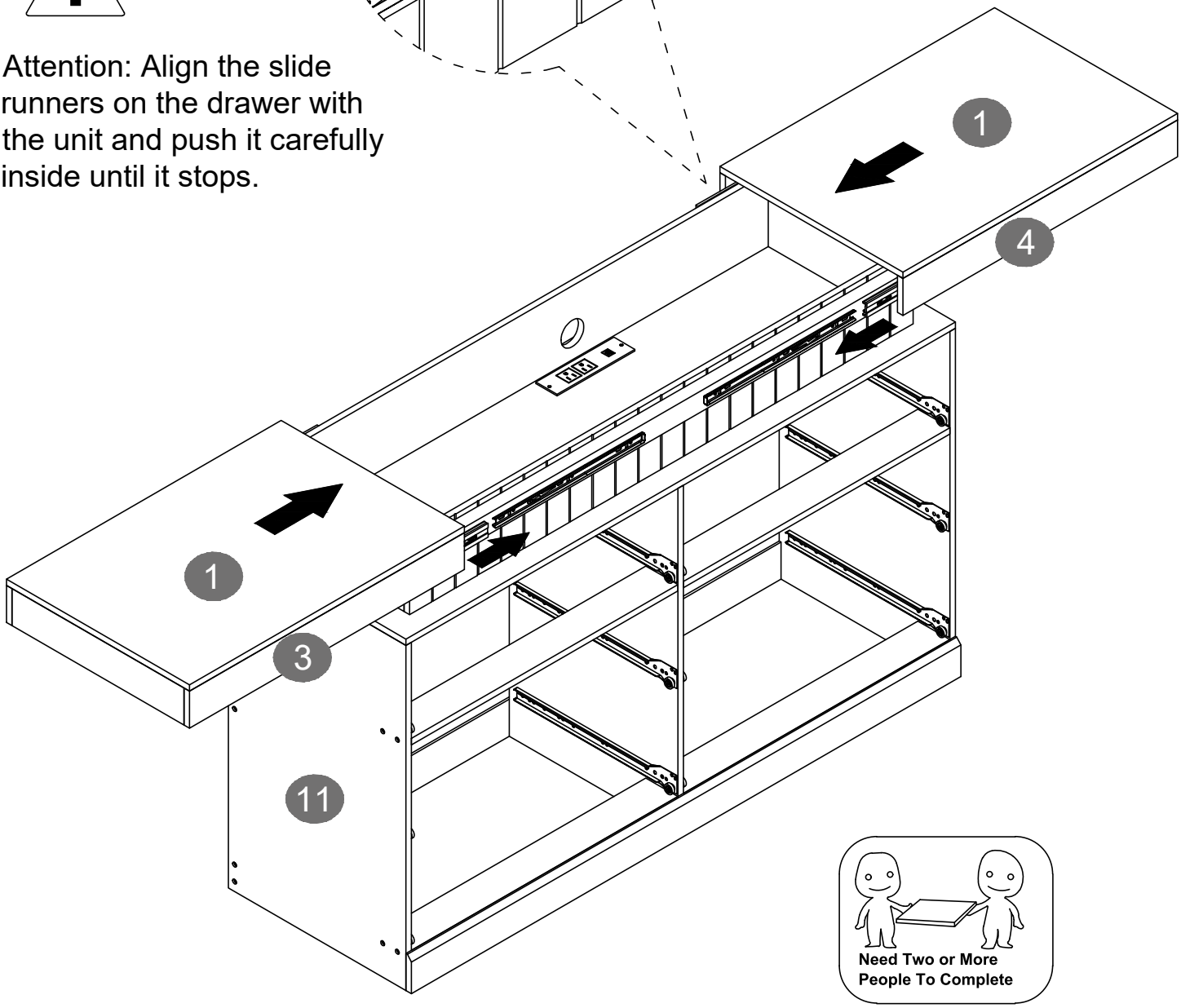

N		9 pcs

Step 30

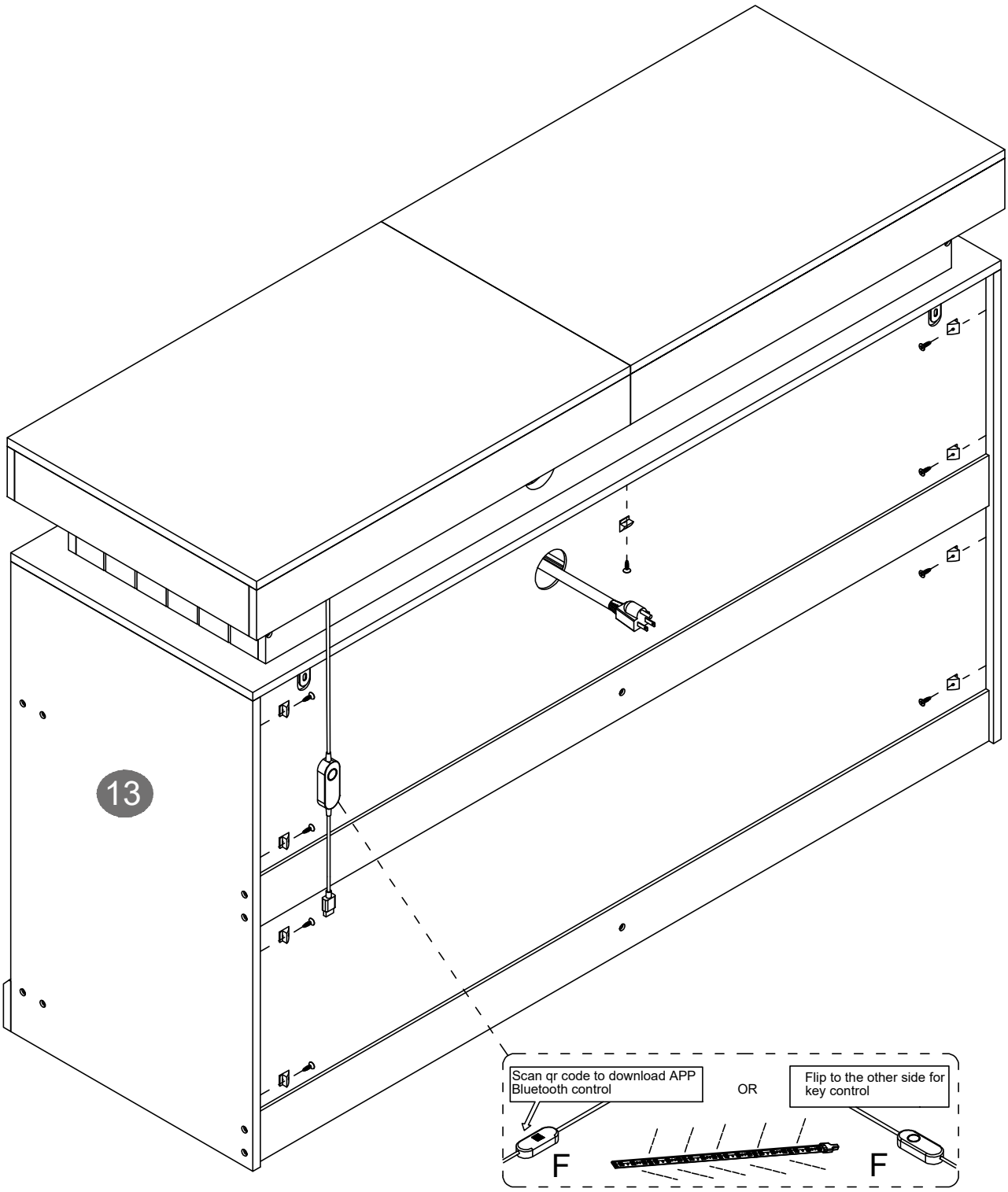

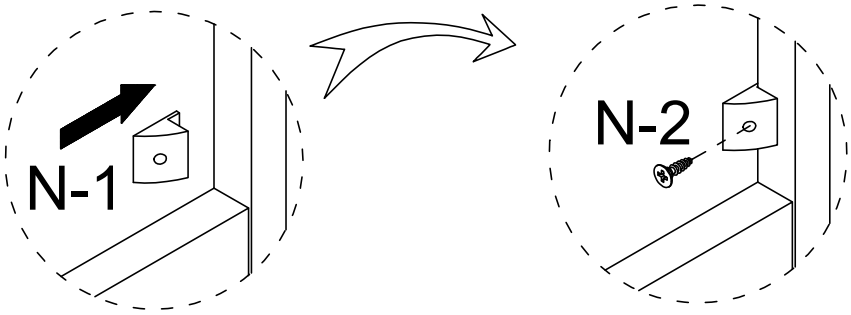

Step 31

D		2 pcs
K		2 pcs

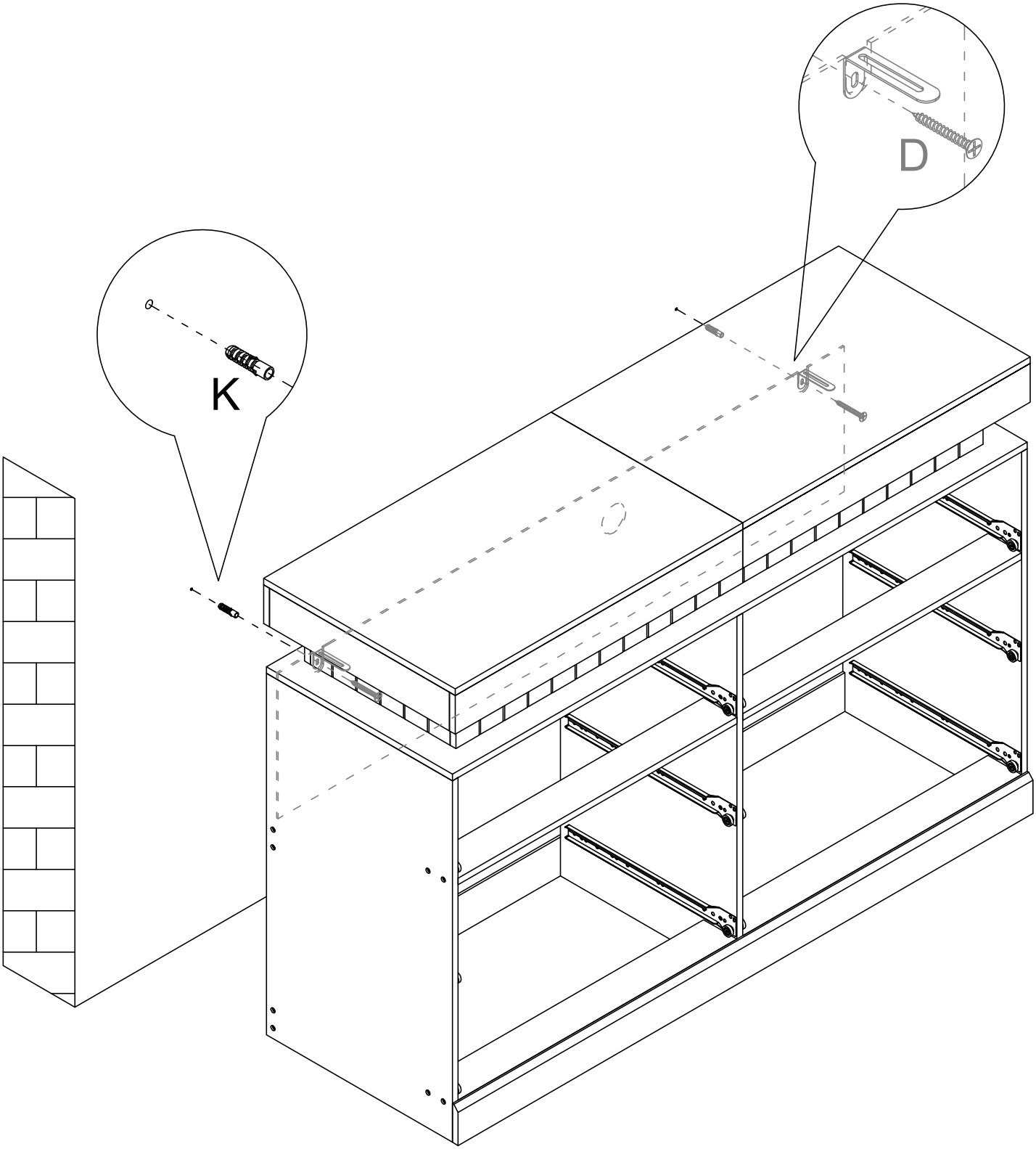

D		10 pcs

Step 32

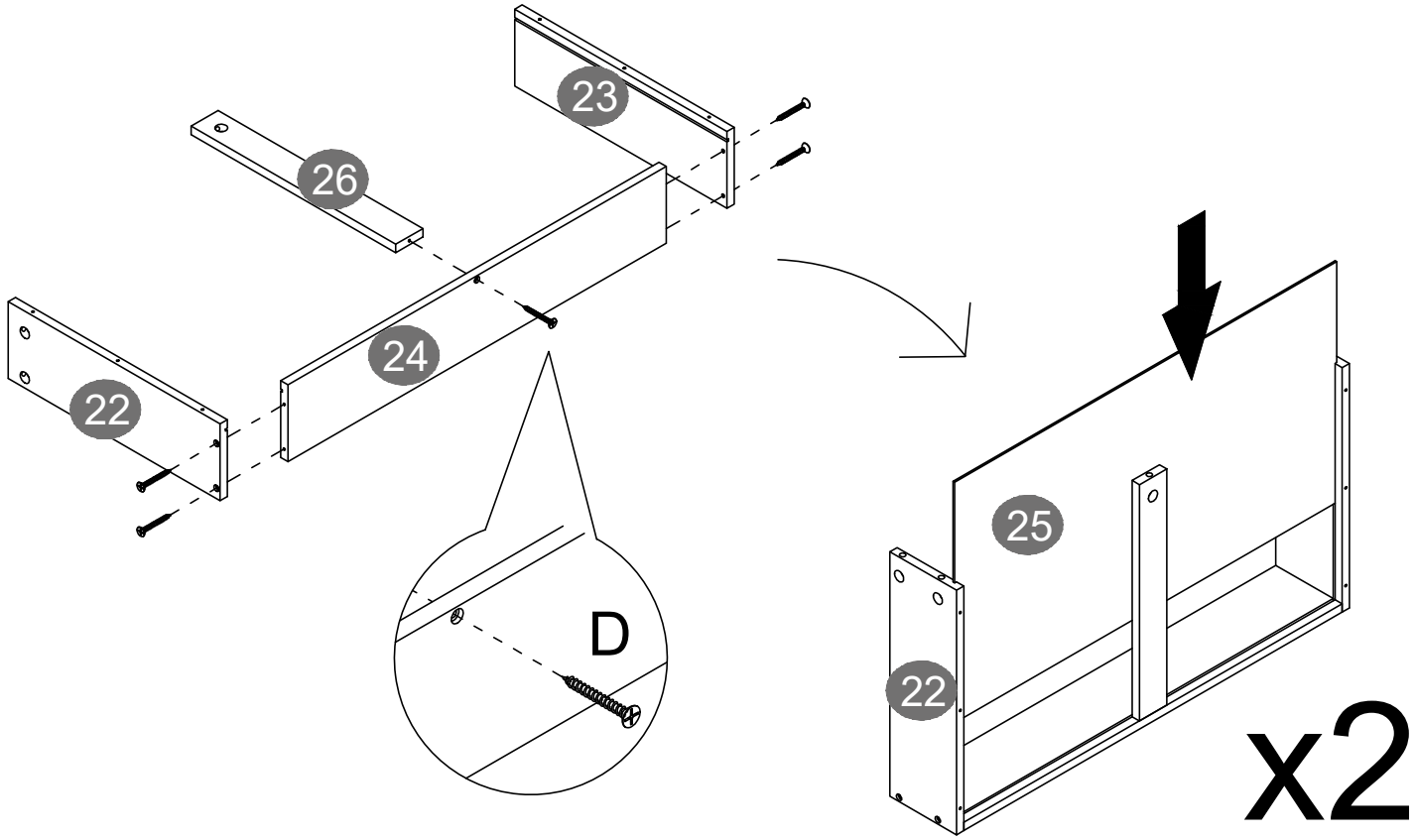

A		10 pcs
B		10 pcs

Step 33

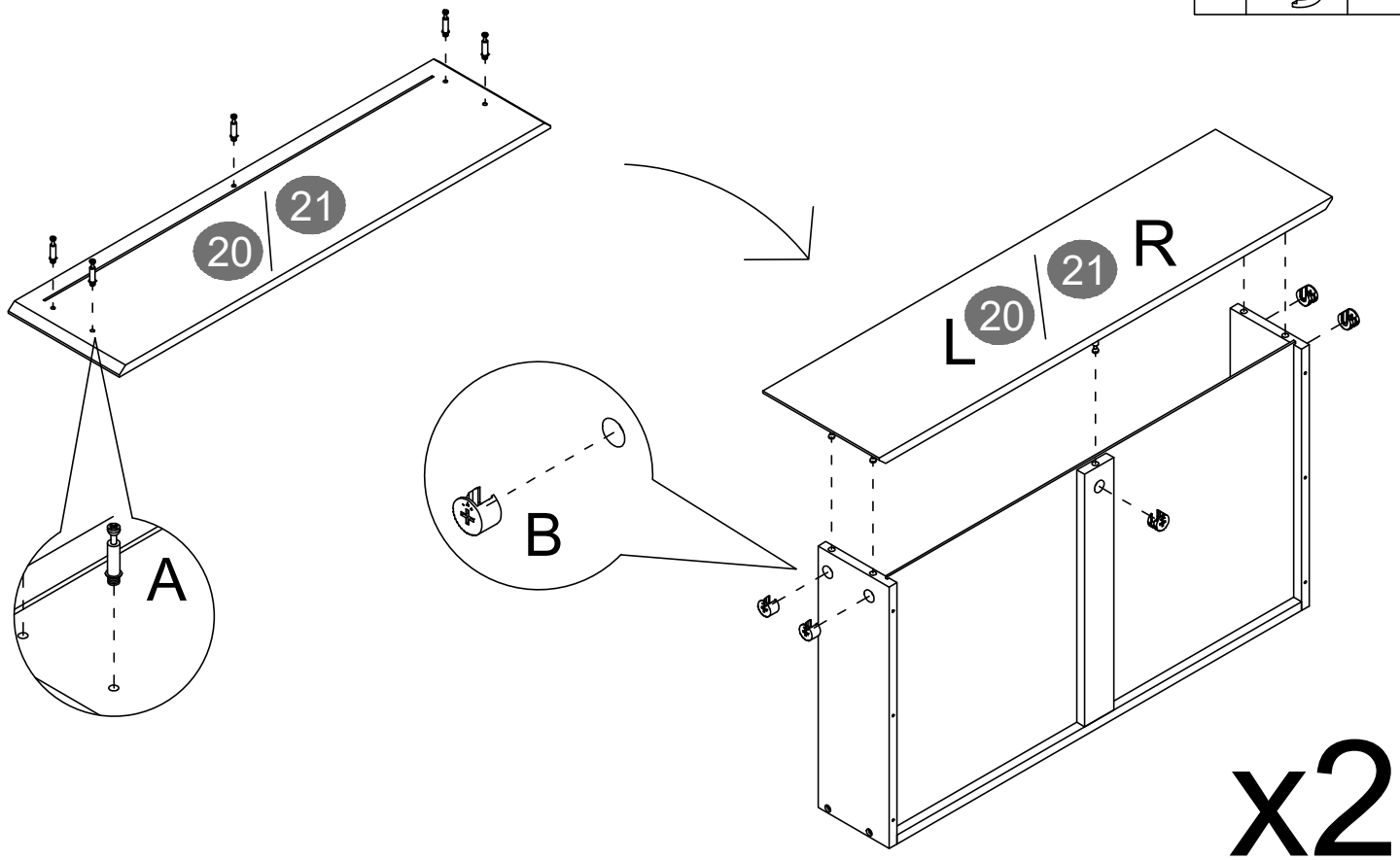

Step 34

E		12 pcs
DL		2 pcs
DR		2 pcs

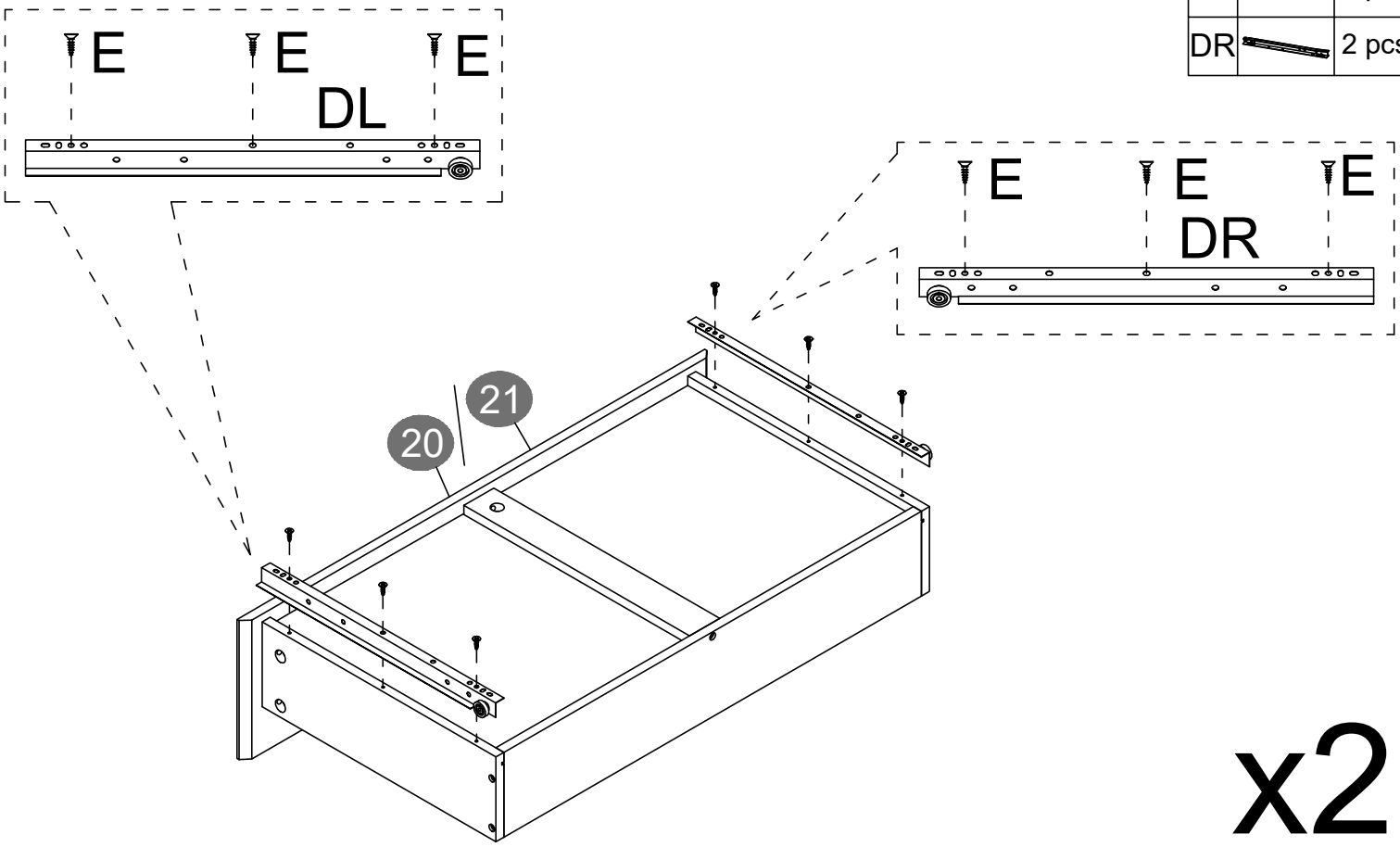

x2

Step 35

D		20 pcs

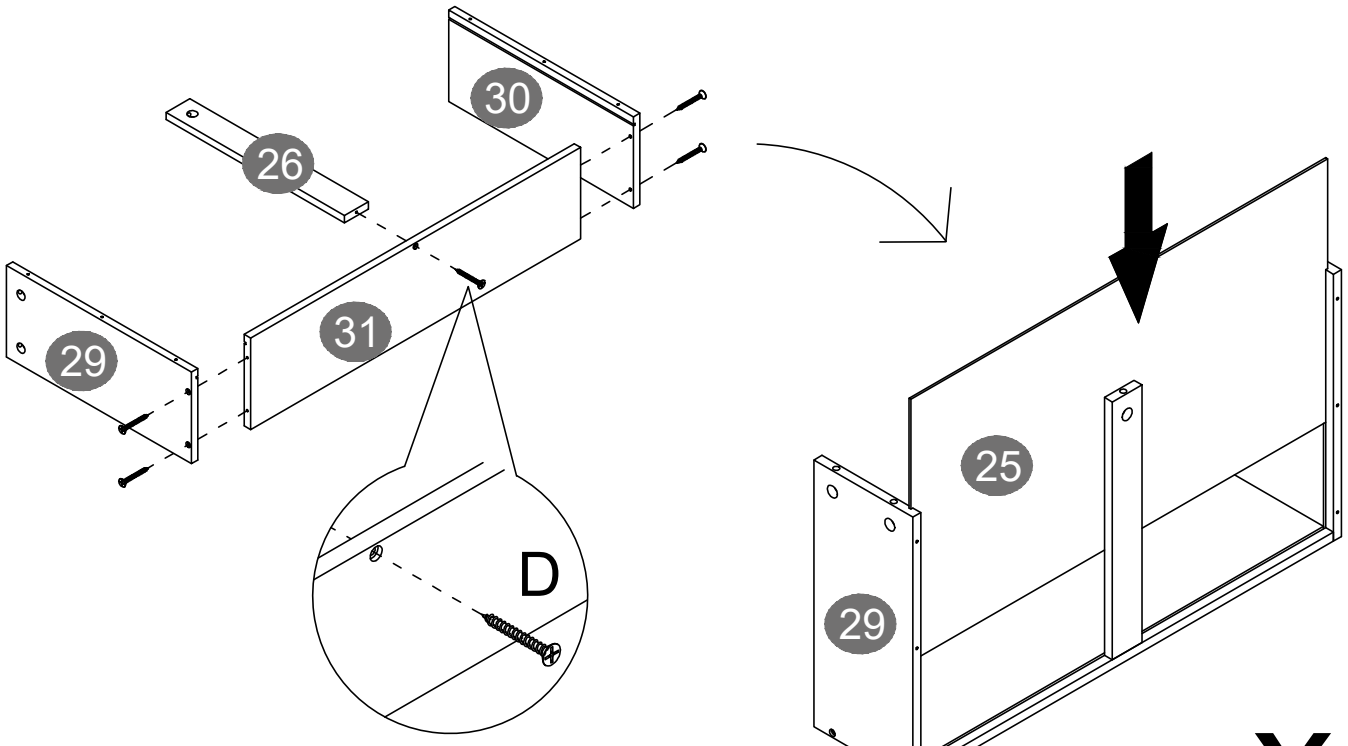

x4

Step 36

A		20 pcs
B		20 pcs

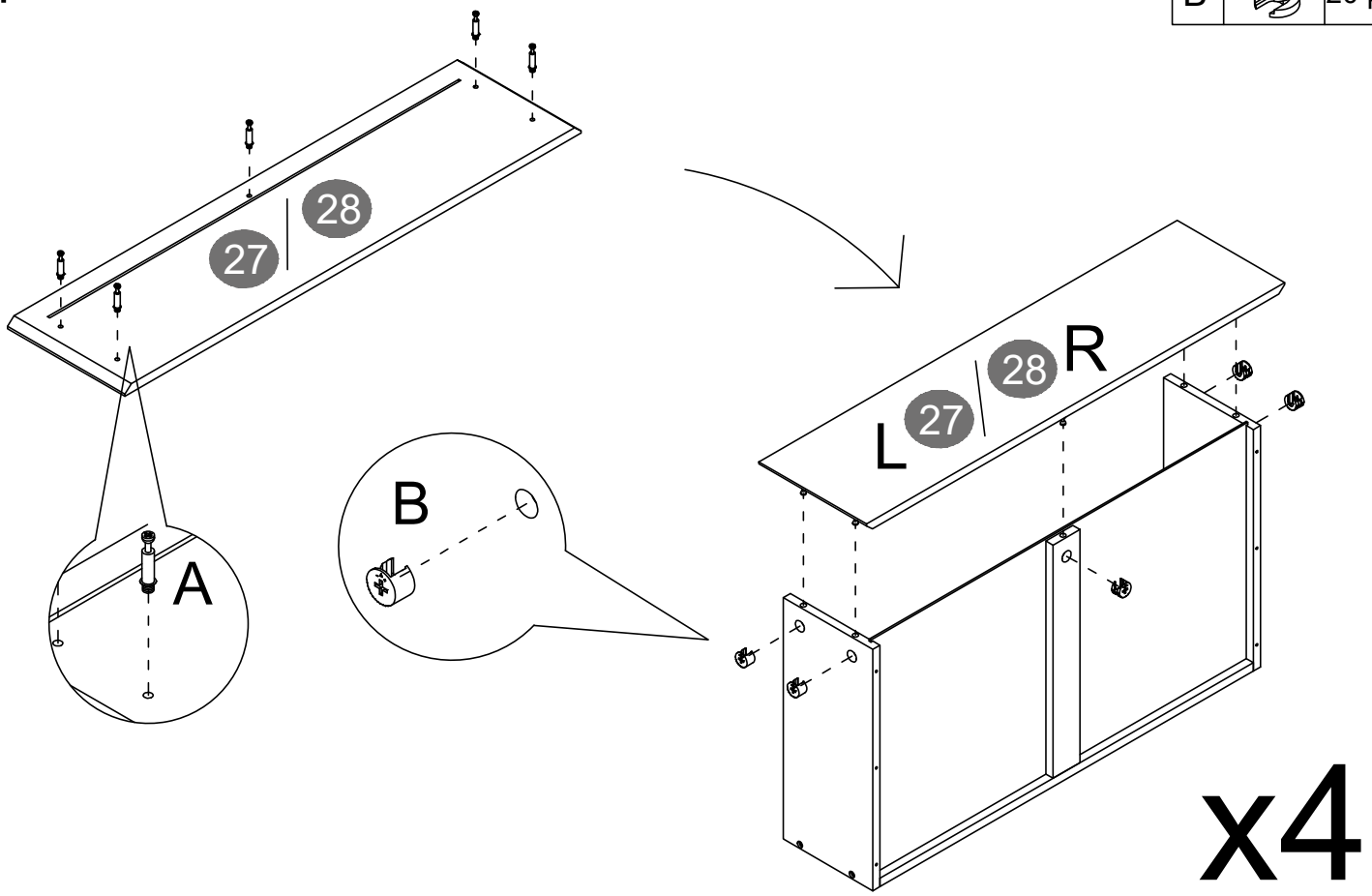

Step 37

E		24 pcs
DL		4 pcs
DR		4 pcs

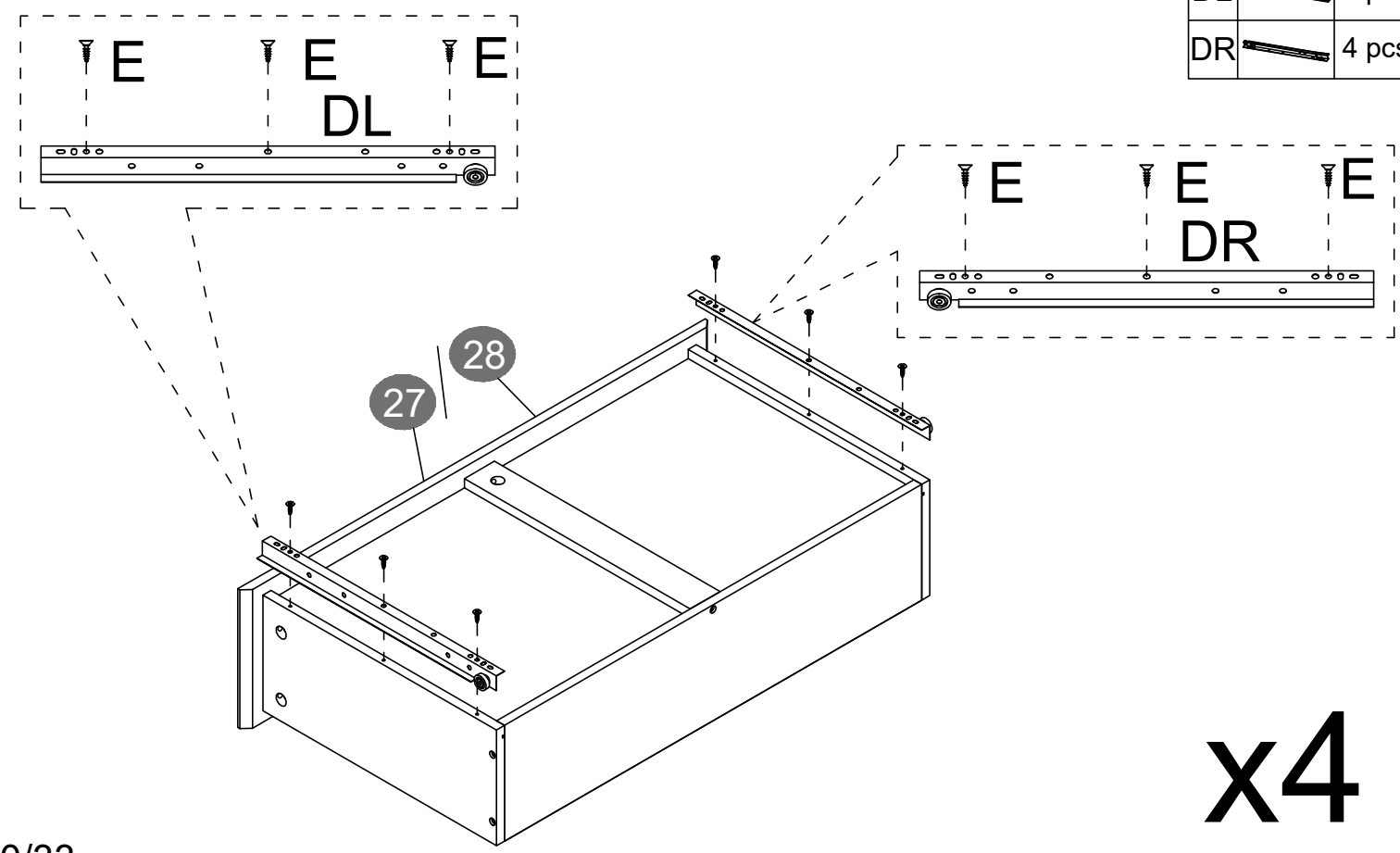

Step 38

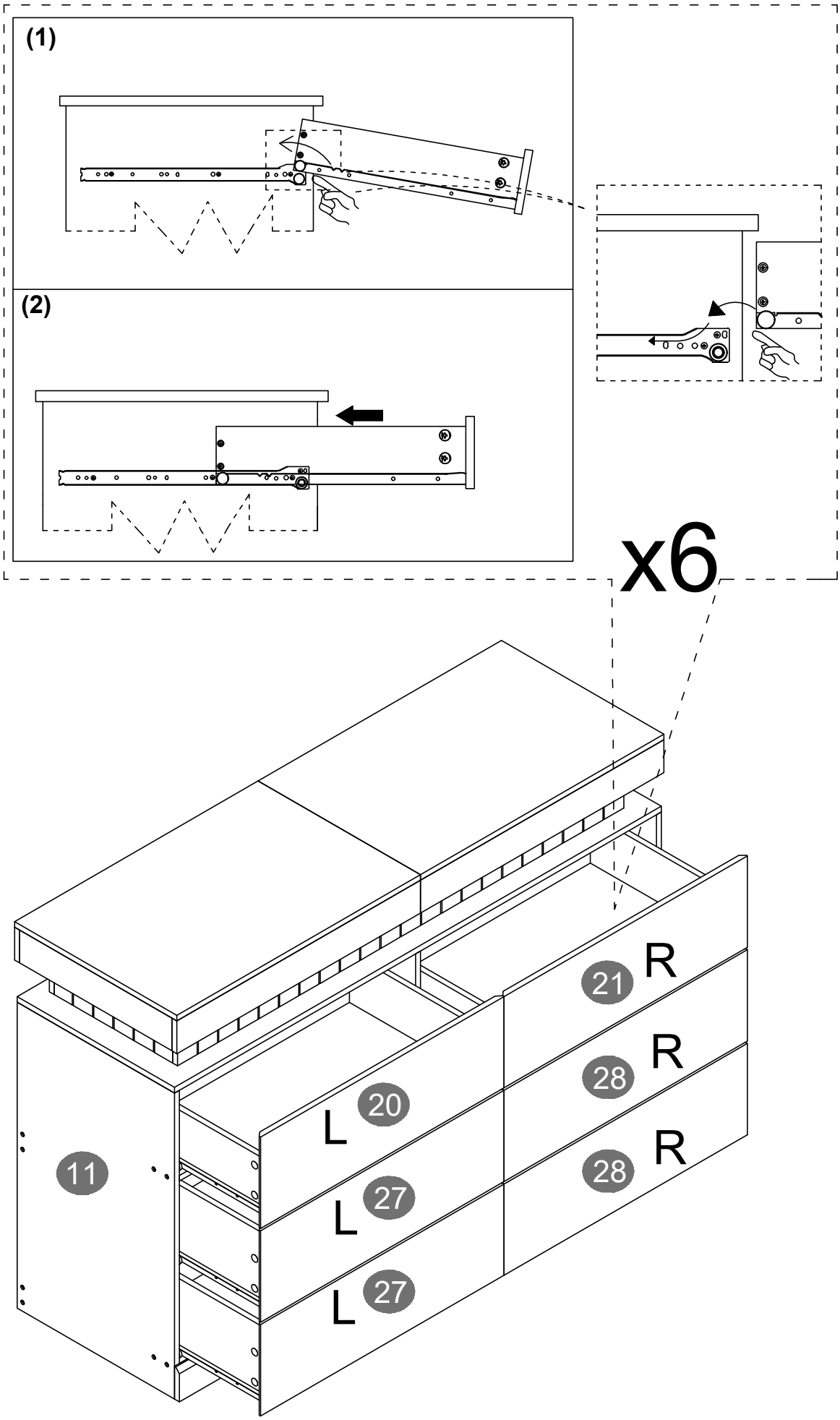

Q	⬭	16 pcs

Step 39

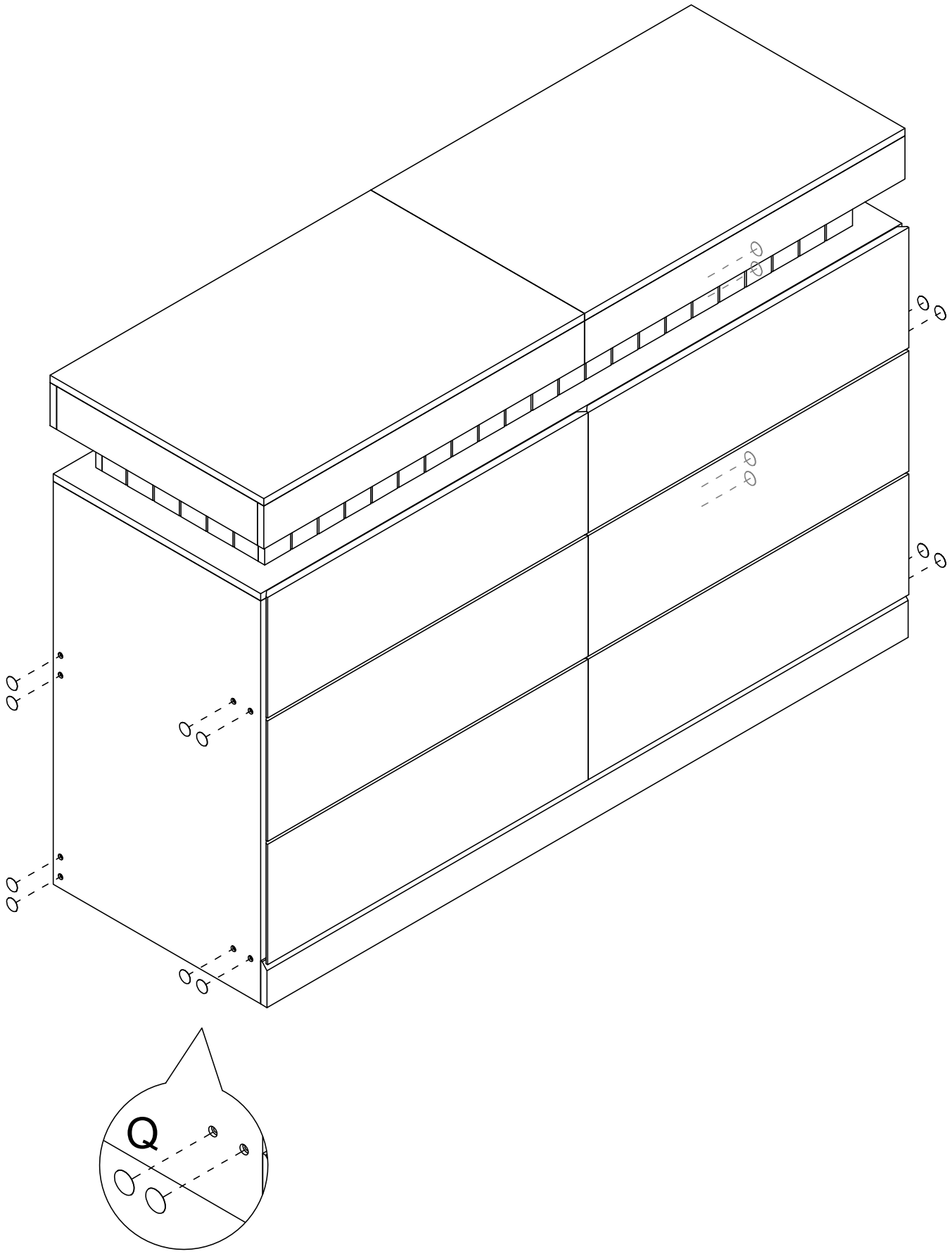

L		2 pcs
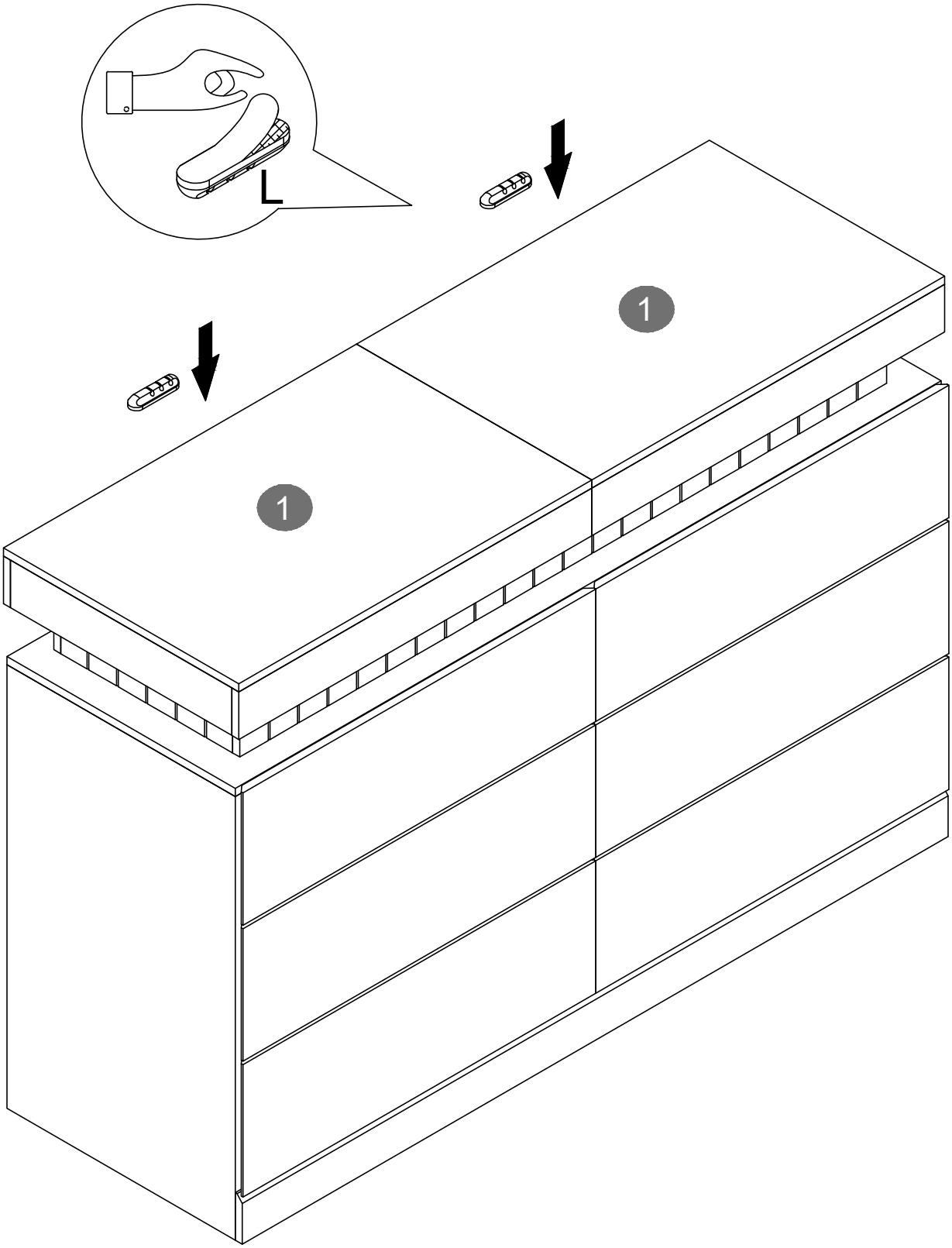
Step 40