outline drawing:

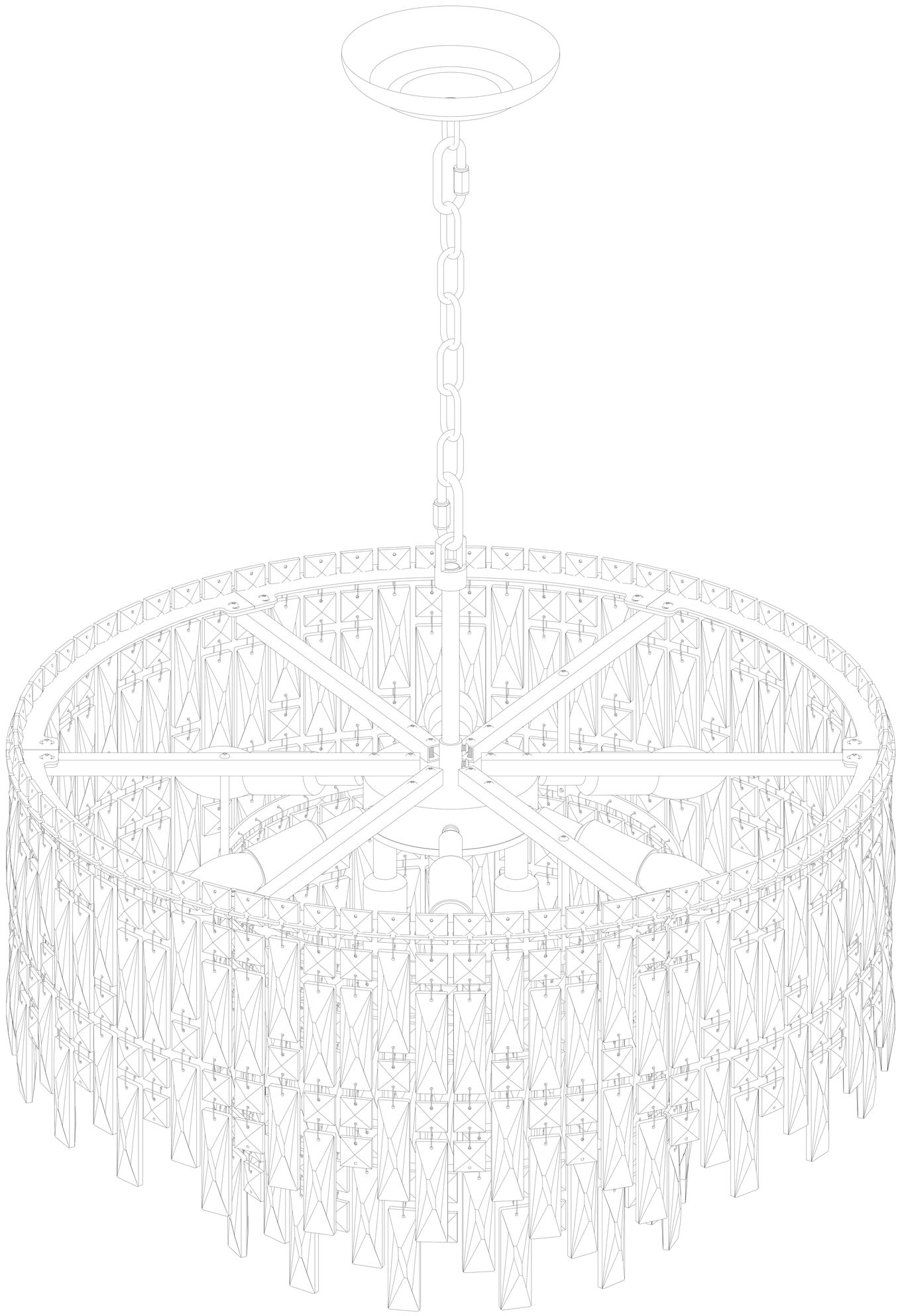

model:

Technical data: Power supply voltage 110-120V, bulb type E12Max40Wx10PCS (not included)

CAUTION

- Before installing the lighting fixtures, please check the insulation of the wires for any cuts, wear, or possible damage during transportation。If the wires are defective, do not attempt installation 。
- In some countries, electrical installation work can only be carried out by authorized electrical contractors。Please contact the local power department for advice。

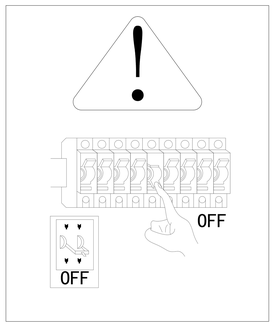

IMPORTANT Before starting the installation work, please make sure to cut off the power supply to the circuit。

IMPORTANT Keep children away from the installation process 。

Required tools (not included):

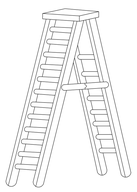

Ladder

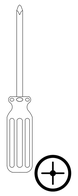

Phillips screwdriver

pincers

Required tools (including):

expension screws

glove

The hardware kit provides:

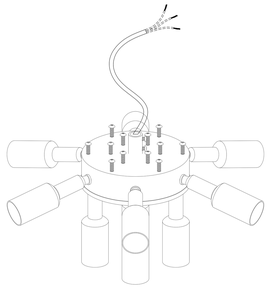

Lights, Ancient

mounting screw

Hanging plate screws

CONNECTORS

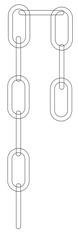

sling chain

tray

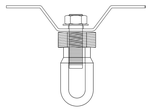

Installation board

ring

carabiner

Square support - 3 PCS

middle pole

Square platoon A - 3 PCS

Square platoon B - 3 PCS

20# square beads * 3 + 76# crystal bars with double holes * 1 + 76# crystal bars with single hole * 1 - 37 pcs

20# square beads * 4 + 76# crystal rods with double holes * 1 - 37 pcs

Line cutting pieces -6pcs

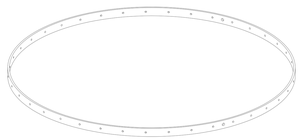

Flat iron ring

20# square beads * 2 + 76# crystal rods with double holes * 1 + 76# crystal rods with single hole * 1 - 37 pcs

cable tie

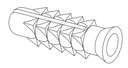

Gecko rubber stopper

Self tapping screws

- The components displayed on each lamp may vary slightly

step 1

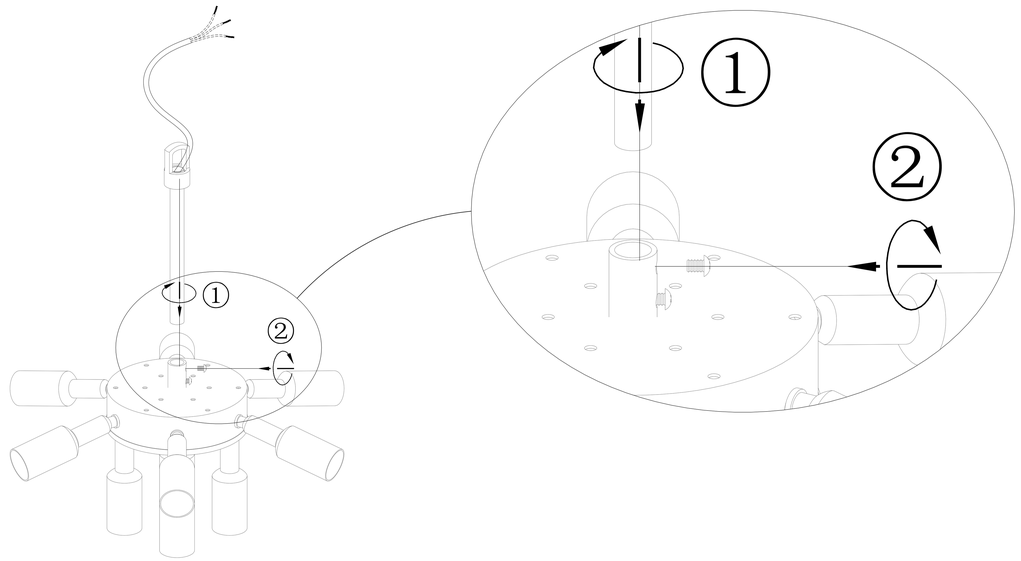

① Connect and tighten the middle rod directly to the lamp post。

② Tighten the safety screw onto the female connector。

Step 2

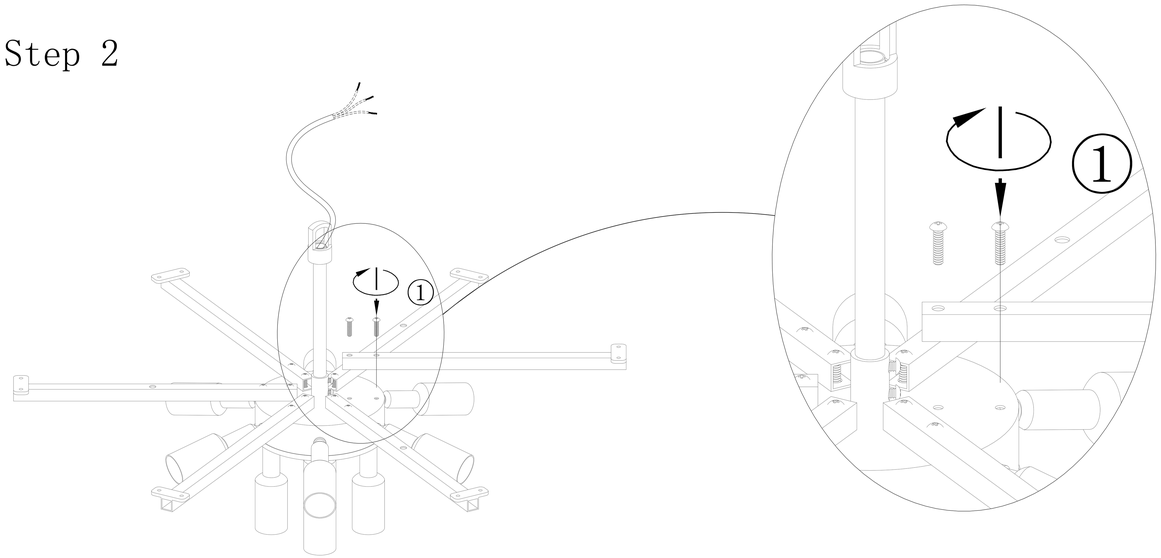

① Insert the screw through the square hole and connect it to the lamp base. Finally, tighten it after completing the installation in step 3。

Step 3

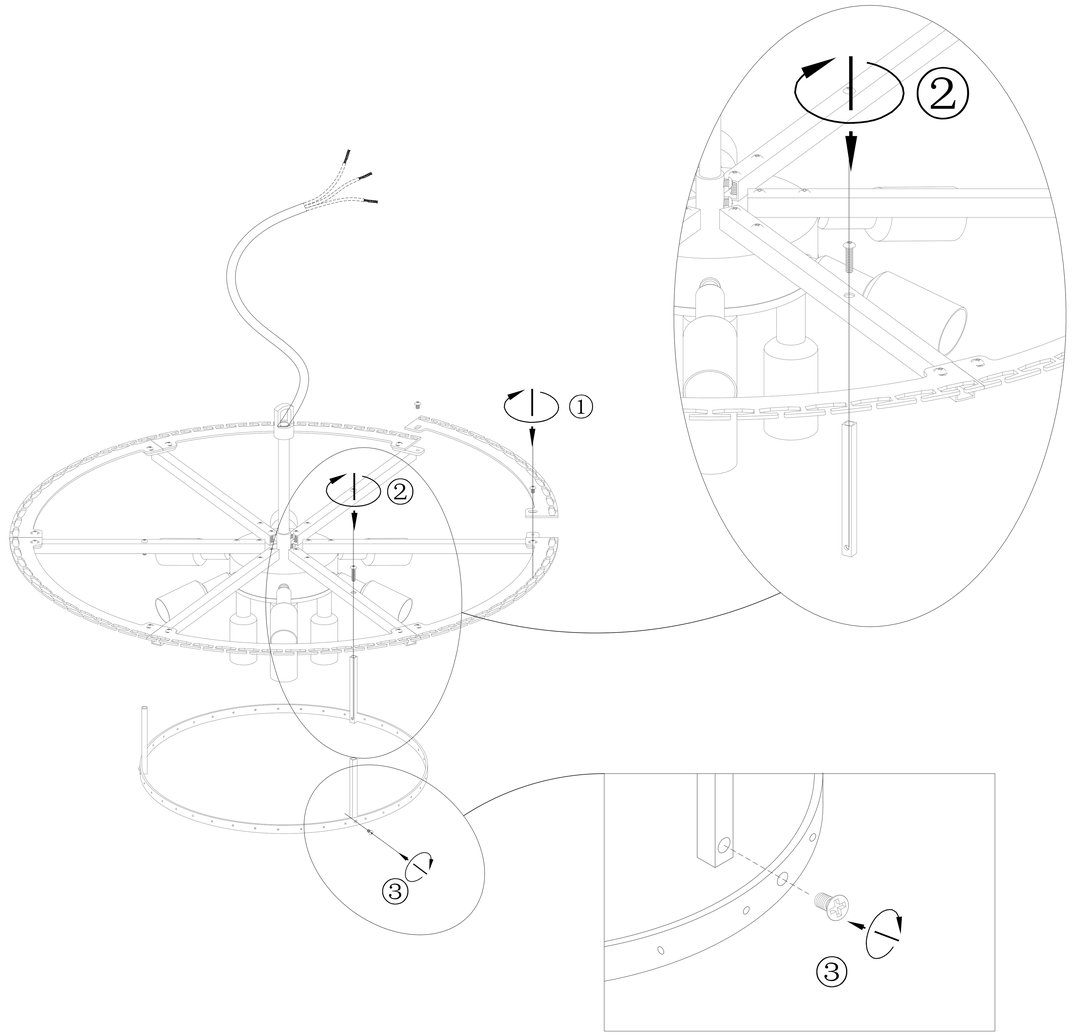

① Place the wire cut pieces on the welding square, align the holes, and tighten with screws。

② Insert the screw through the hole on the square bar and connect it to the square support, tighten it. Follow this step for the remaining square supports。

③ Insert the screw through the flat iron ring and connect it to the square support, then tighten it。

Step 4

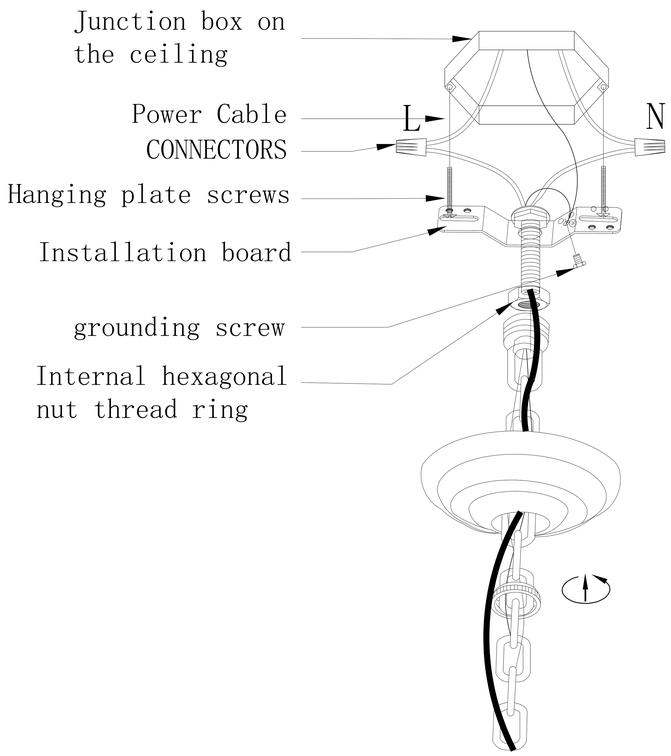

① Thread all the wires through the canopy and installation kit。

② Connect the power cable with two cable connectors。

③ Connect the grounding wire and tighten it with the grounding screw。

④ Install the fixing screws into the mounting plate, install the installation unit under the junction box, and tighten with two mounting screws。

⑤ Fix the canopy in place using a suspension ring. Tighten the screw ring and hex nut with a wrench to tighten the hex nut。

⑥ Tighten the fixing screws on the rain shelter holes。

⑦ Swivel the lid onto the canopy。

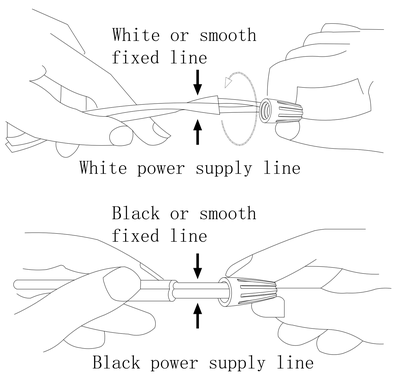

Connect the black or red wire (with an L sticker on the wire) to:	Connect the white wire (with N stickers on the wire) to:
black	white
Parallel lines - pti&l (circular and smooth)	Parallel lines - spri&l (square and ridge shaped)
Transparent, brown, gold or black (without tracer)	Transparent, brown, gold or black (with tracer)
Copper core insulated wire (excluding GREEN)	Silver conductor insulated wire (excluding GREEN)

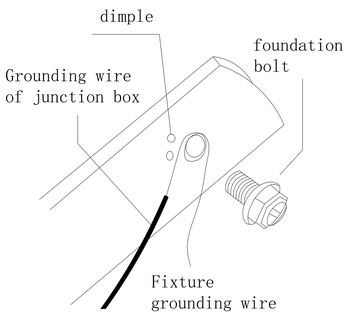

Step 5

Kind reminder:Before installing the crystal, please clean it thoroughly 。

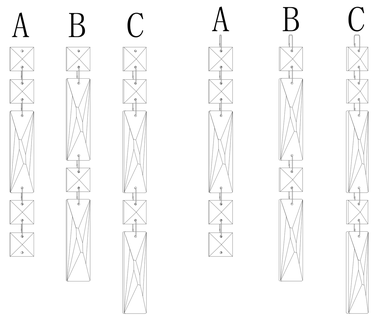

Crystal Installation:Three types of crystal strings are grouped together and installed in sequence

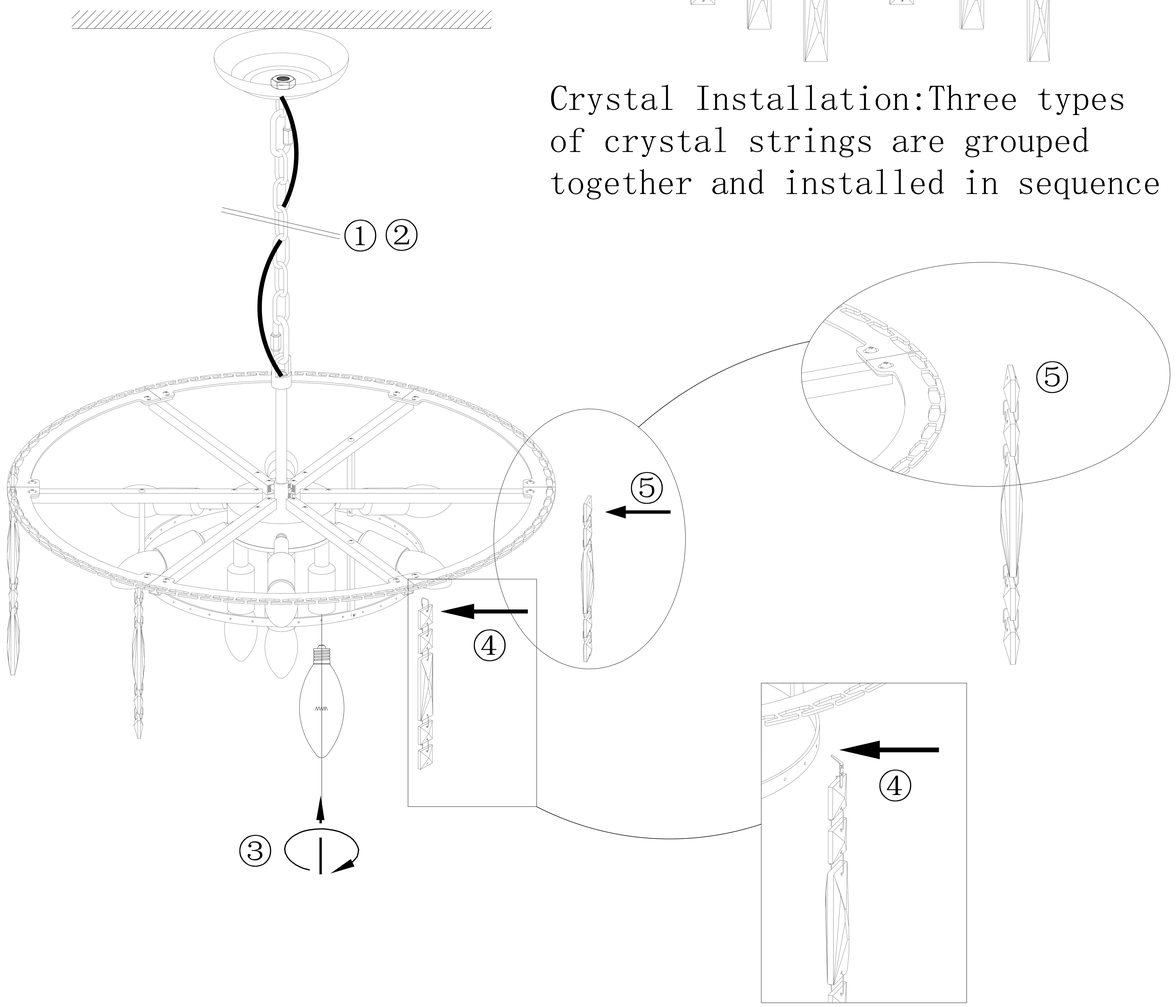

①② This depends on the height of your ceiling and the desired suspension length. You can measure the chain and adjust the locking buckle to achieve the desired chain length。

③ Tighten the light bulb (E12 maximum 40W, not included)。

④ Thread the hanging needle through the long crystal hole and hang it on the loop hole。

⑤ Hang the crystal on the wire-cutting hole。