Installation Instructions

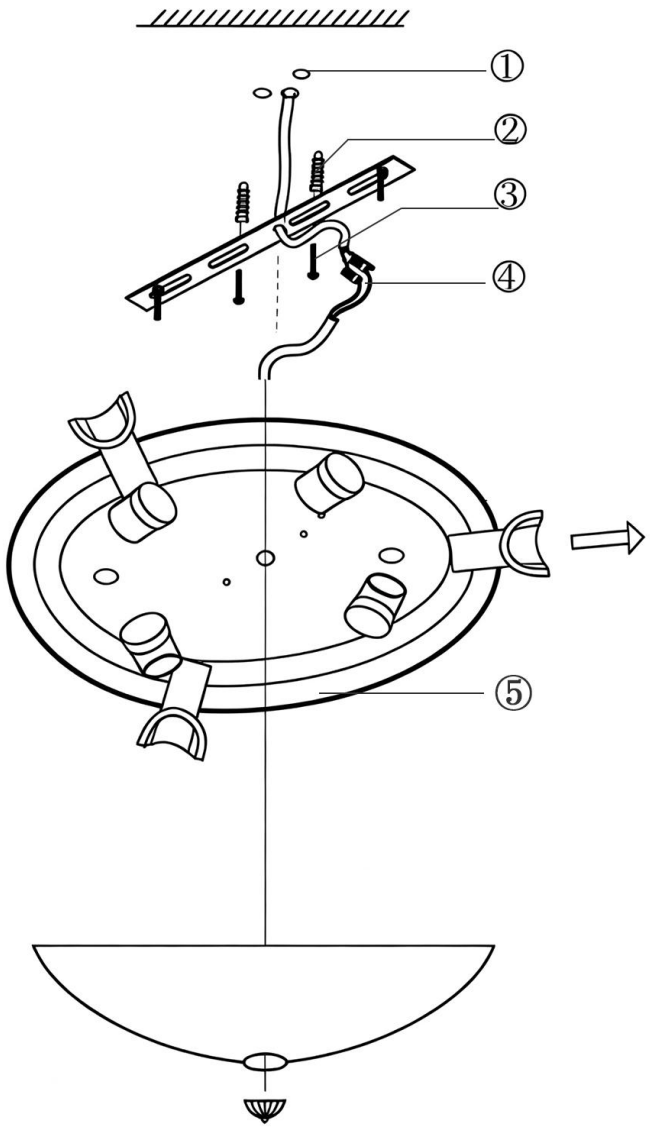

Please follow the steps in the order shown in the diagram: ①②③④⑤⑥.

1. Drill a hole in the ceiling.
2. Insert the expansion bolt in the ceiling.
3. Mount the crissbar by screws.
4. Connect the cable.
5. Place the lampshade and the light source together, then insert the lampshade onto the hook, pull the spring hook firmly, close the lampshade, and release the hook.-source.