Installation Instruction

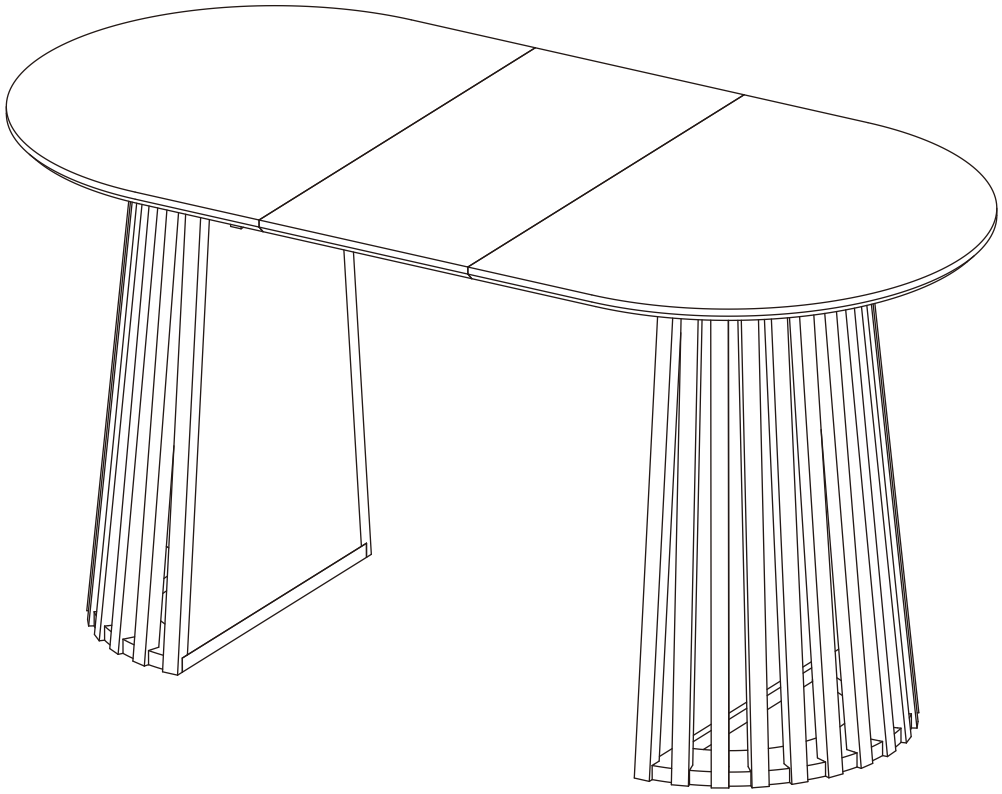

Product Name

Table

Ver.1.0 20250103

Assembling

What you need

- **Use the packaging carton as a working surface to prevent product damage during assembly**

- **Phillips head screwdriver**

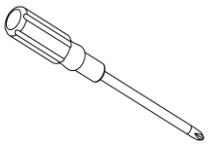

Weight Limitation



120
lbs table top



2 PERSONS

What's included

Code	Description	Qty
A	Bolt M6x30mm	30
B	Metal Plate	36
C	Allen Key	1
D	Screw M4x50mm	60
E	Wooden Dowel ø6x30mm	30
F	Wooden Dowel ø10x40mm	6
G	Bolt M6x30mm	8
H	Bolt M6x35mm	6
I	Mat	6

The Hardwares

A

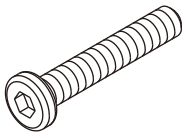

B

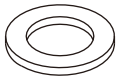

C

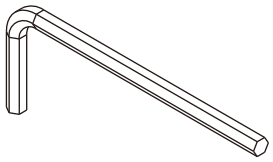

D

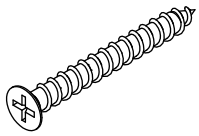

E

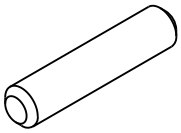

F

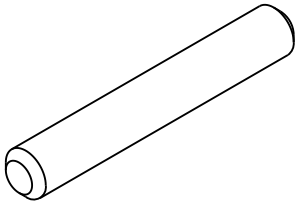

G

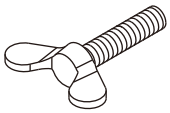

H

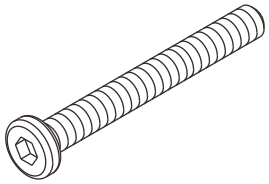

I



IMPORTANT:

1.Do not tighten bolts / screws completely until all bolts / screws are lined up and inserted into holes.

2.Do not over tighten screws and bolts to avoid stripping.

3.Please use hand tools to assemble this product. Do not use power tools.

4. Must need 2 people to assemble this product.



2 PERSONS

Included Accessories

Code	Description	Qty
1	Semicircle Table Top	2
2	Middle Table Top	1
3	Intermediate Laminate	2
4	Support Panel	2
5	Support Feet	26
6	Bottom Panel	2
7	Metal Pipe	4

The Accessories

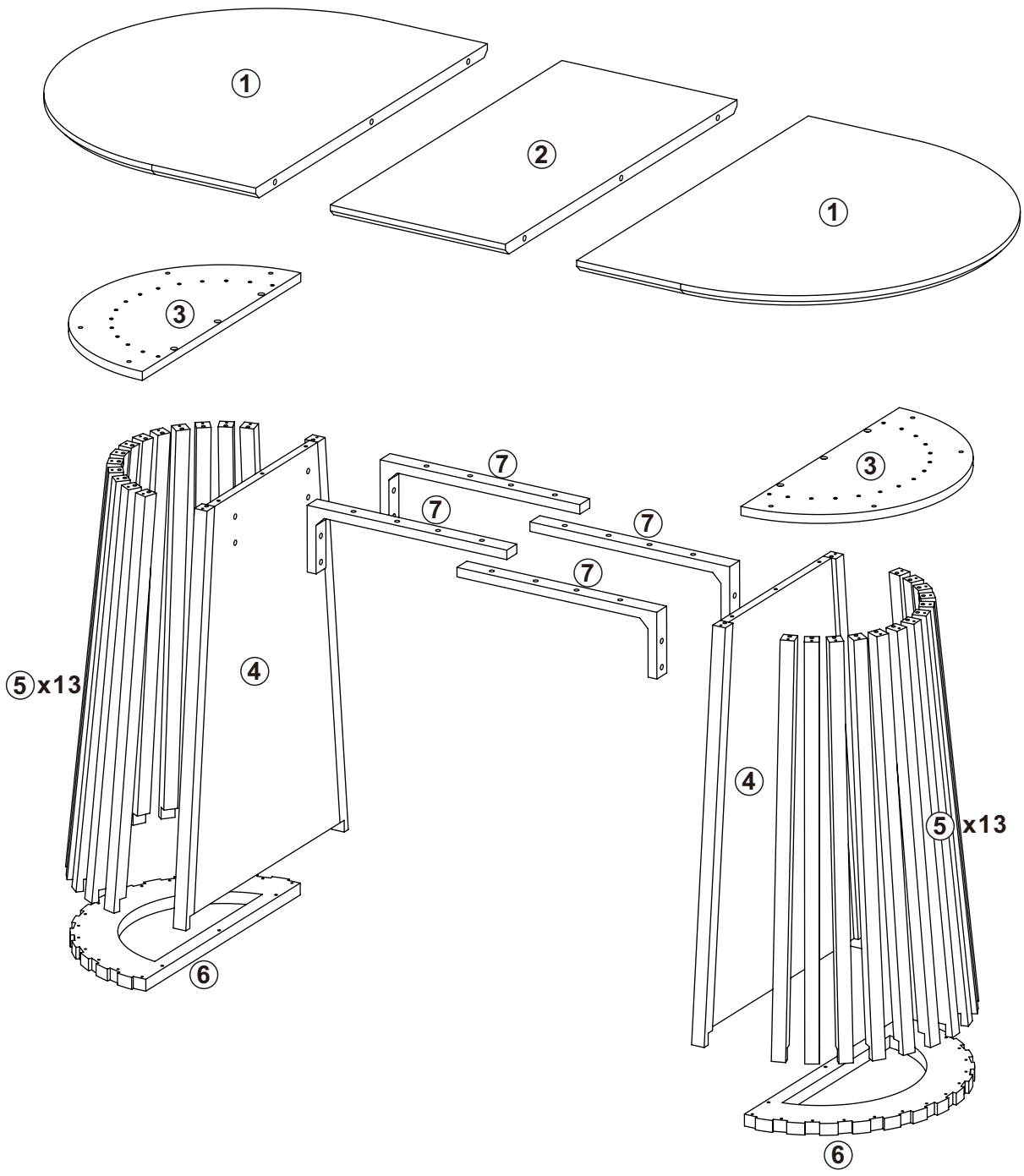

STEP1

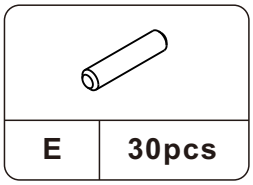

E	30pcs

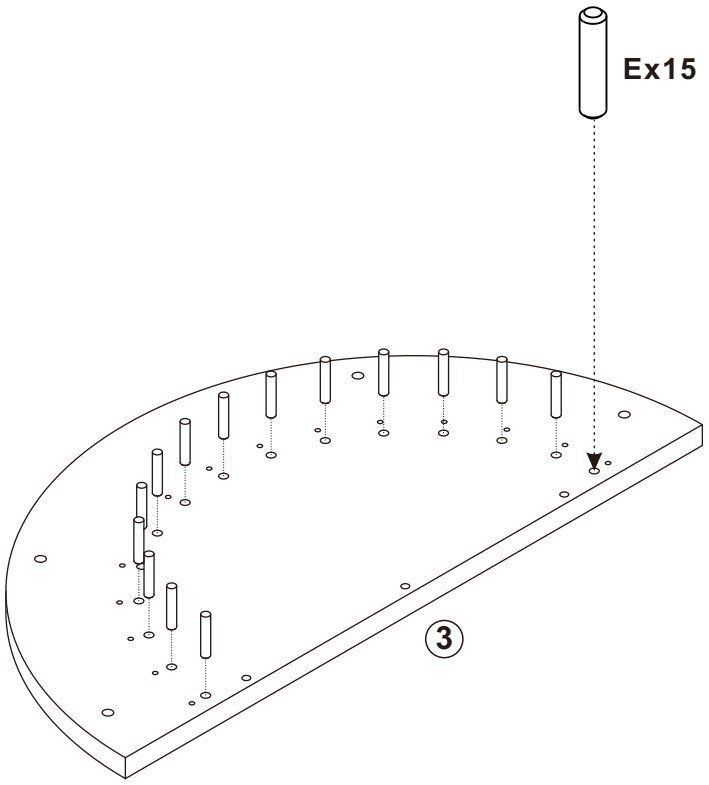

x2

STEP2

A	6pcs	B	12pcs	H	6pcs	C	1pc

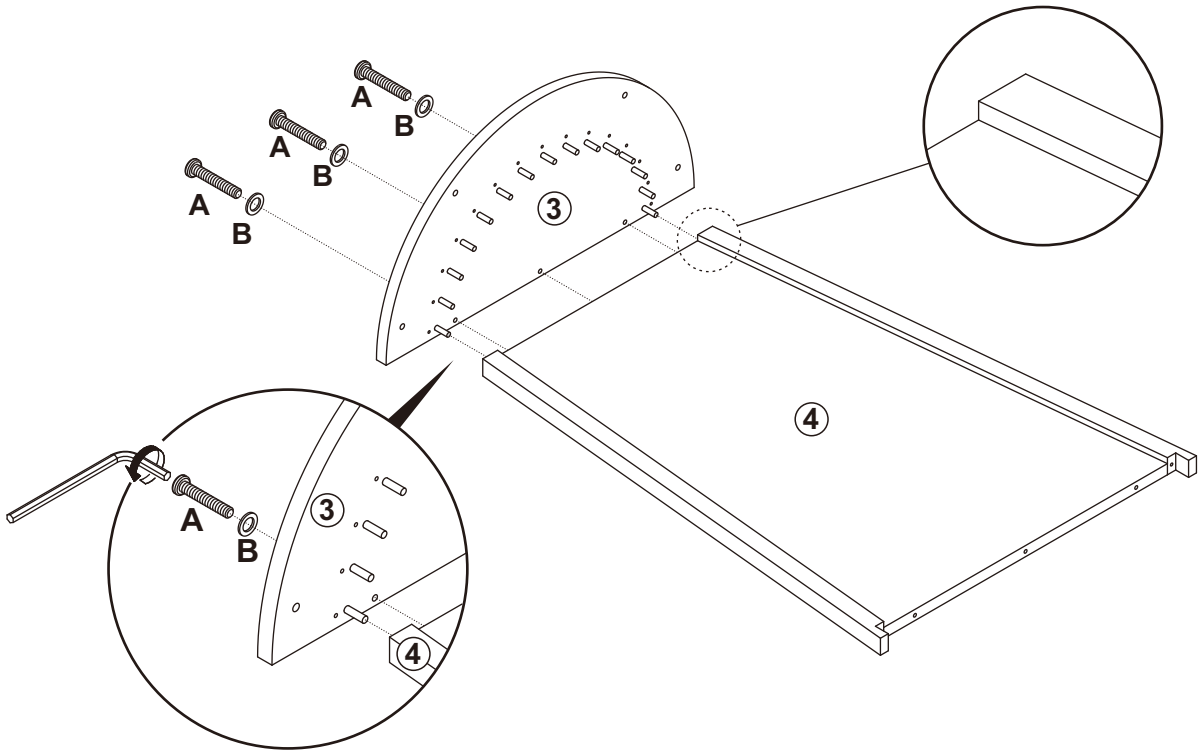

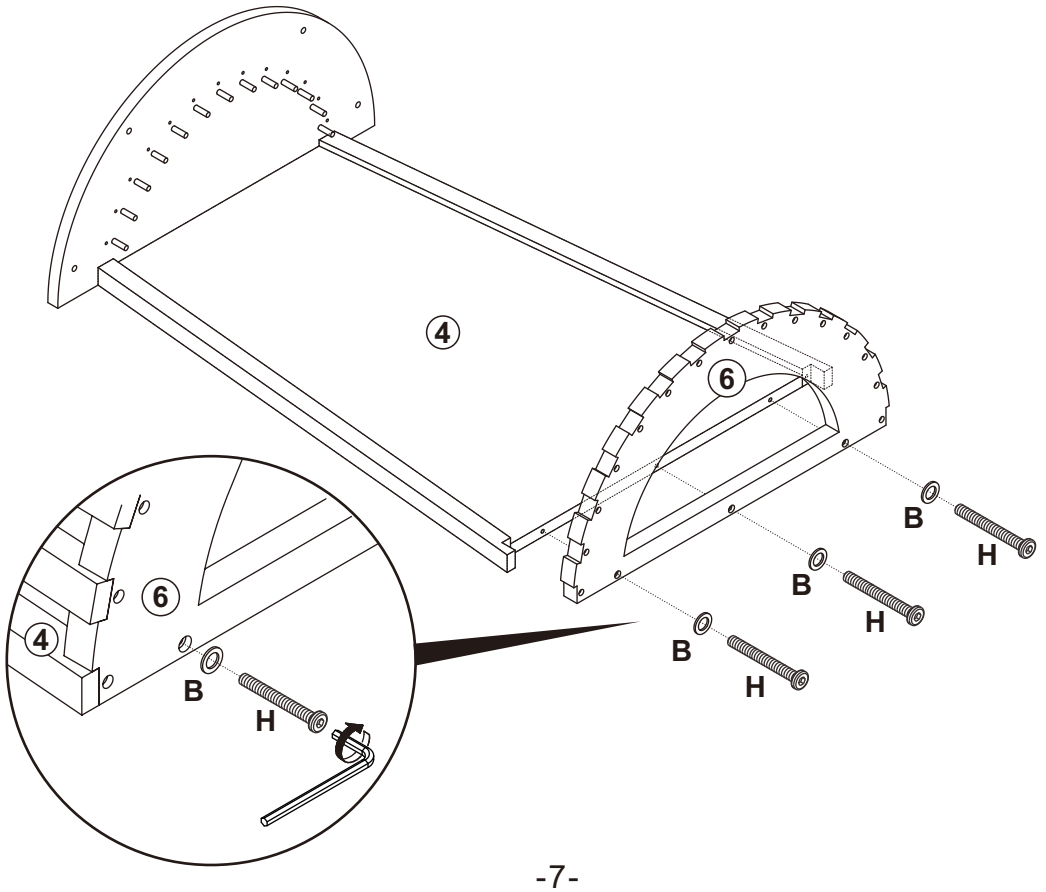

x2

STEP3

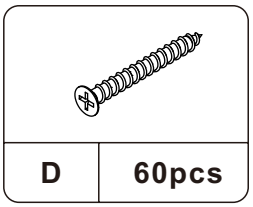

D	60pcs

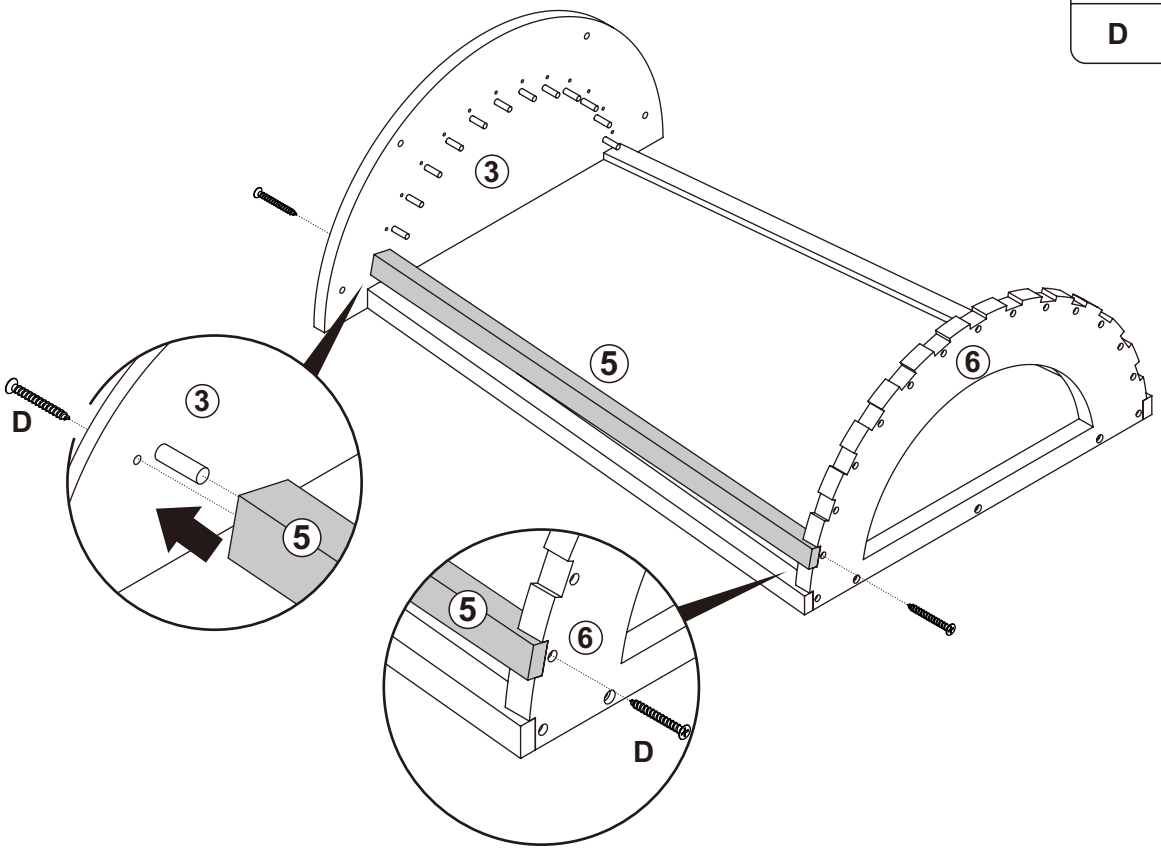

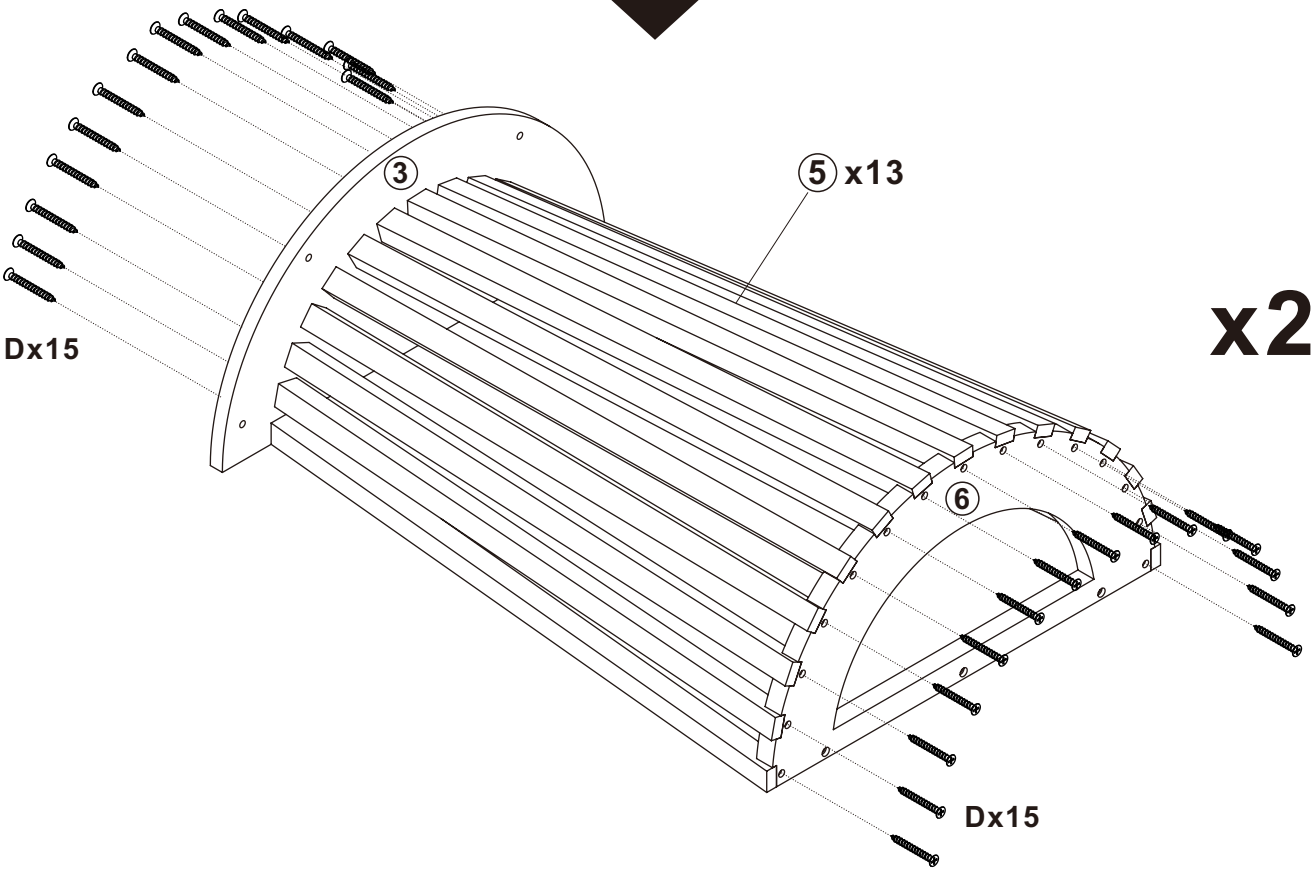

x2

STEP4

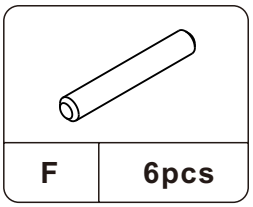

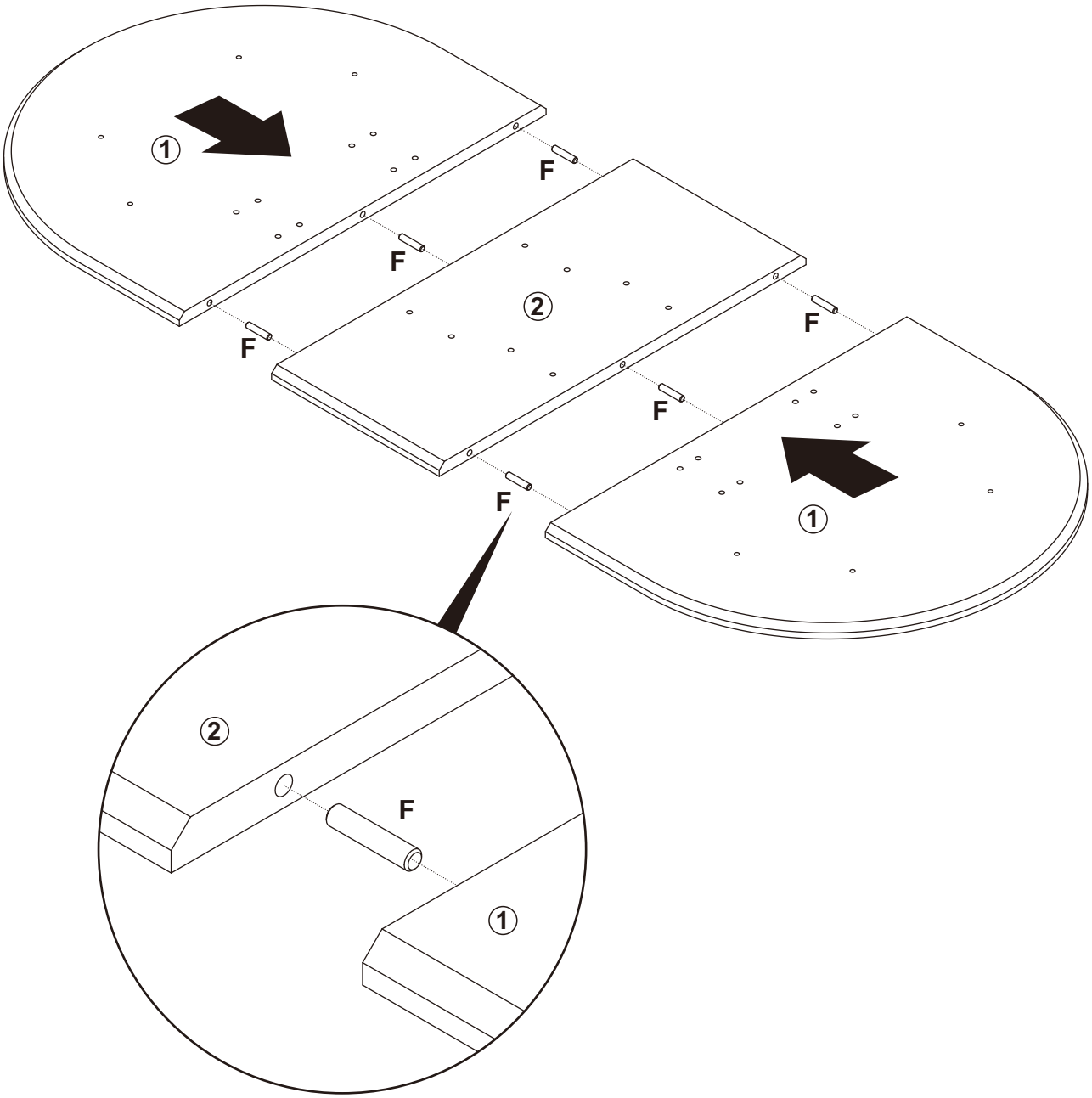

STEP5

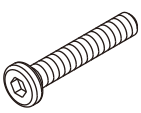				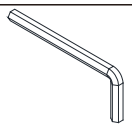	
A	8pcs	B	8pcs	C	1pc

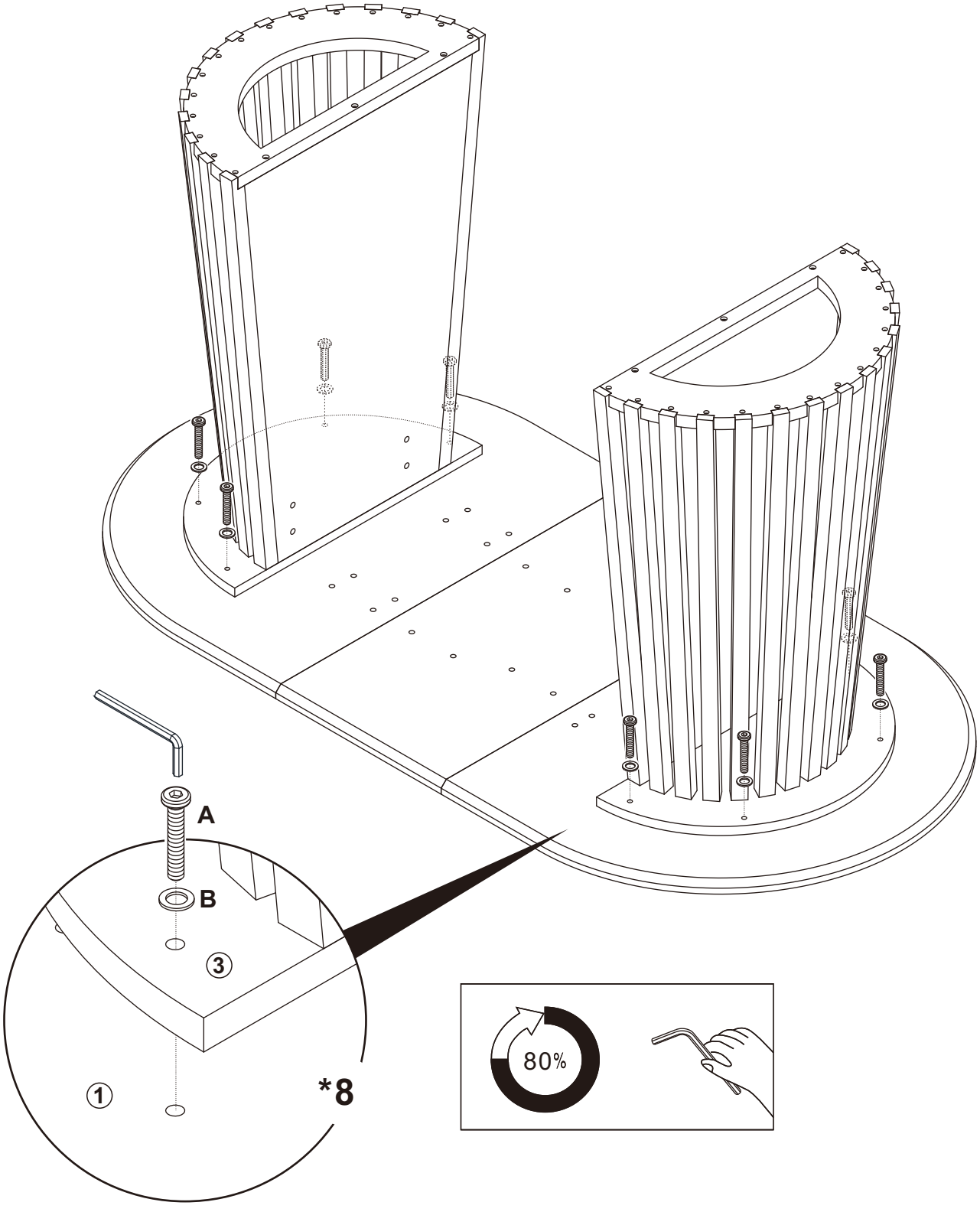

STEP6

G	8pcs

A	16pcs

B	16pcs

C	1pc

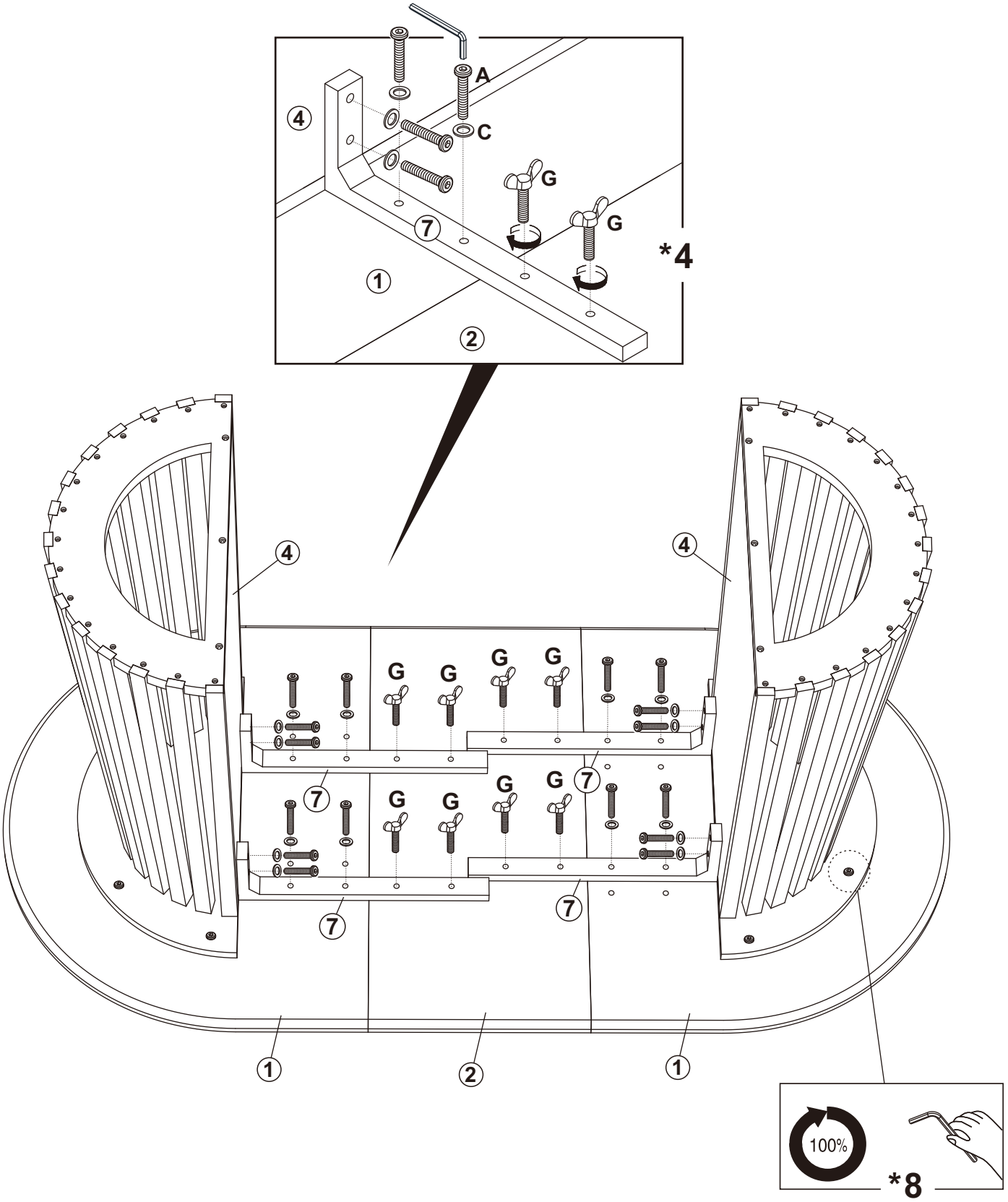

STEP7

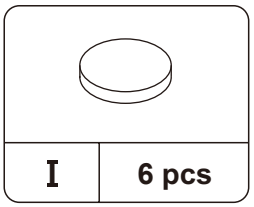

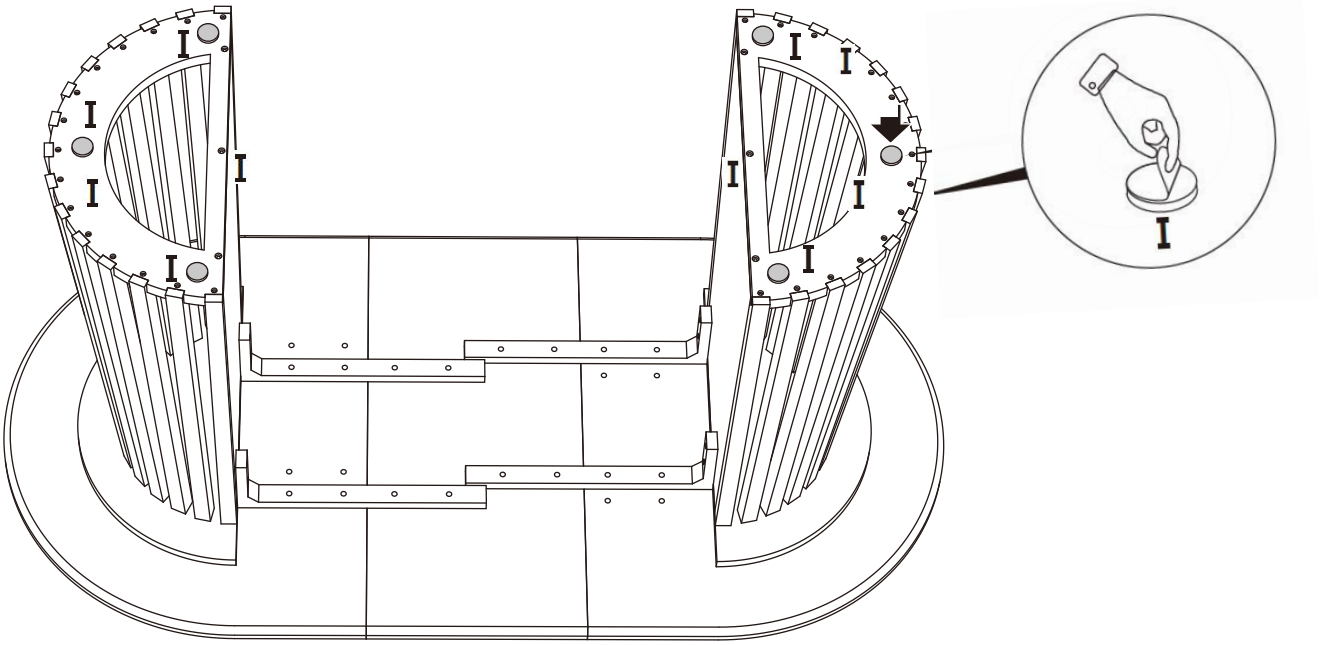

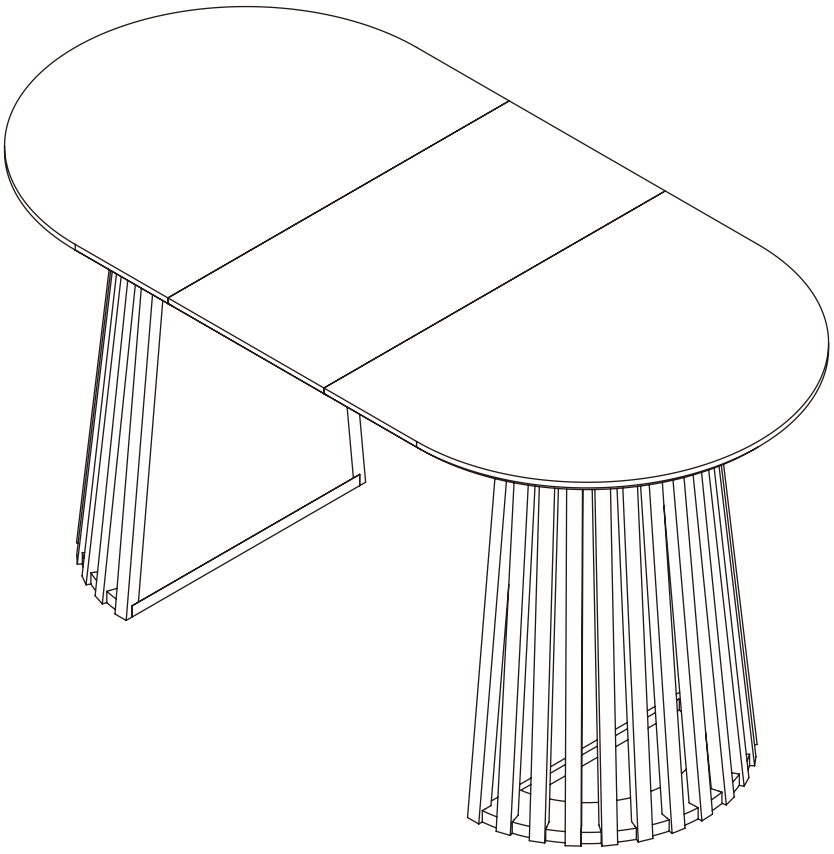

STEP8

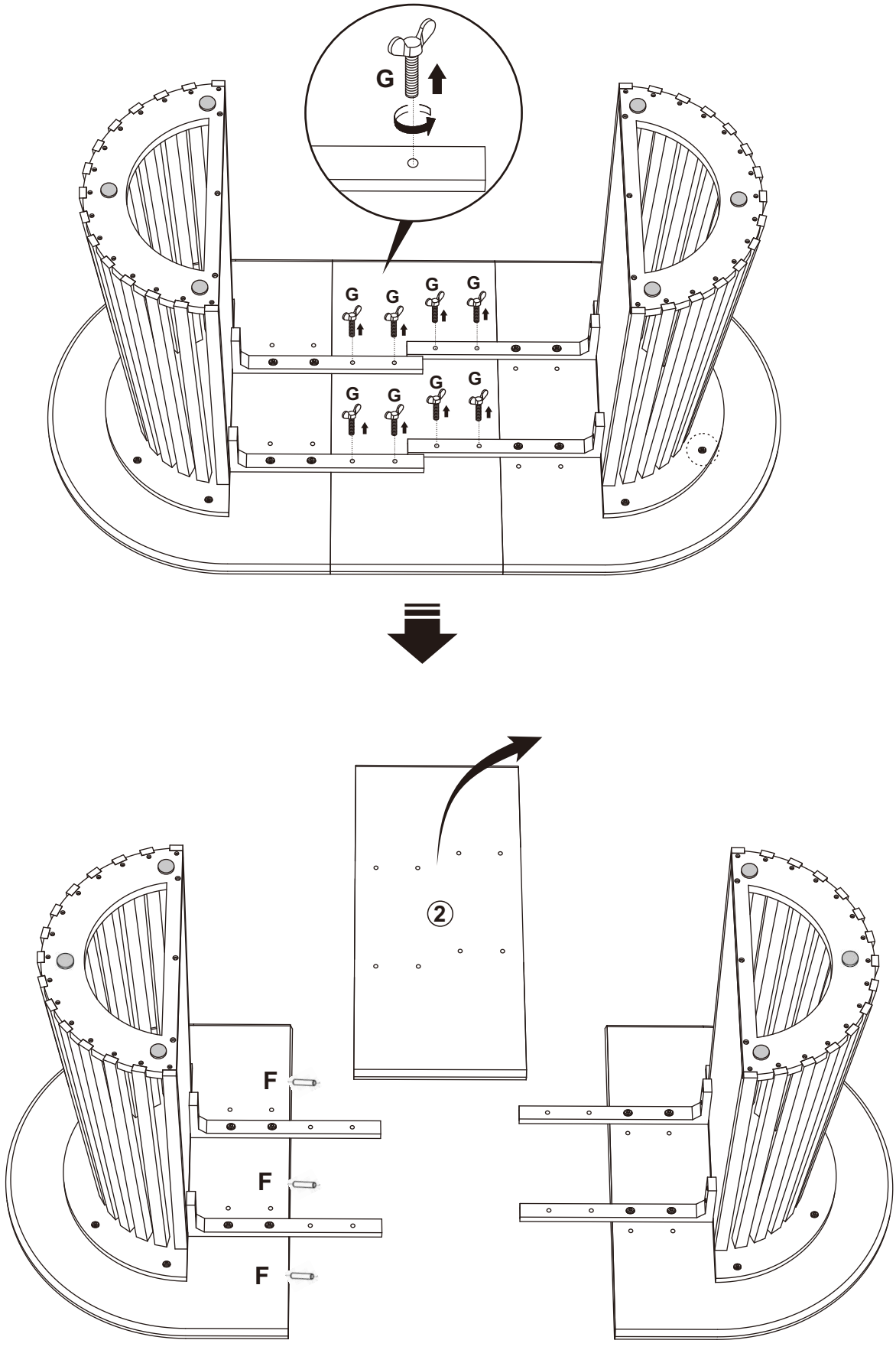

STEP9

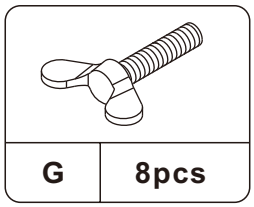

G	8pcs

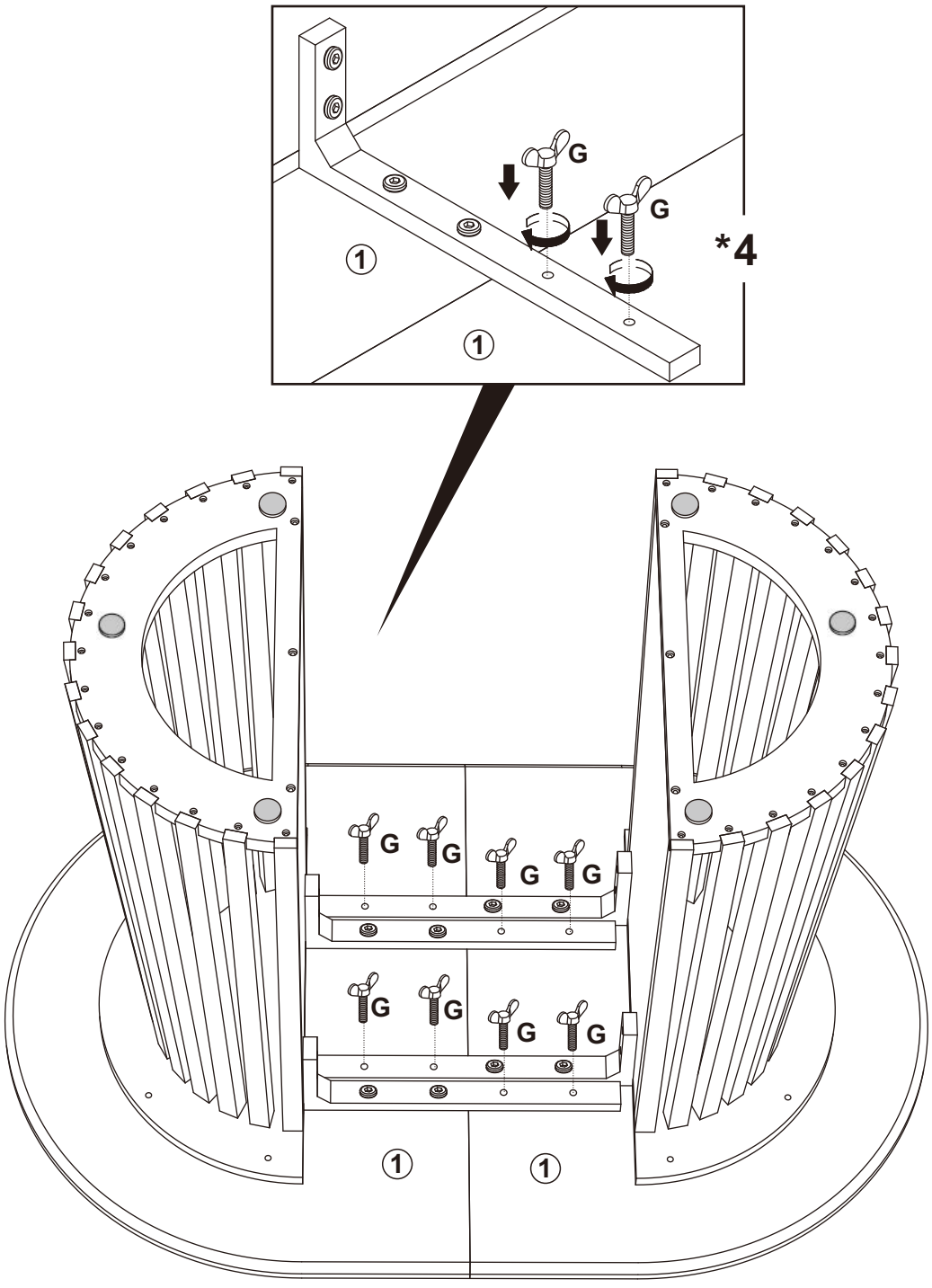

STEP10



Proper Use

DO NOT use for commercial purposes

DO NOT use as a step stool or stand on table

DO NOT put hot serving liquid directly on the table top

DO NOT leave spilled liquid on the table top

DO NOT use table if damaged

DO NOT exceed weight limit

DO NOT make temporary repairs

DO NOT use outdoor

Dear Customer:

Thank you for purchasing our product, we wish you satisfy our service, if you have any further questions or any quality issues, please show the belows number and don't hesitate to contact our Customer Service People：

W688202501