Assembly instructions

Product code: BW00481AAB

full XL over (Twin + Twin)

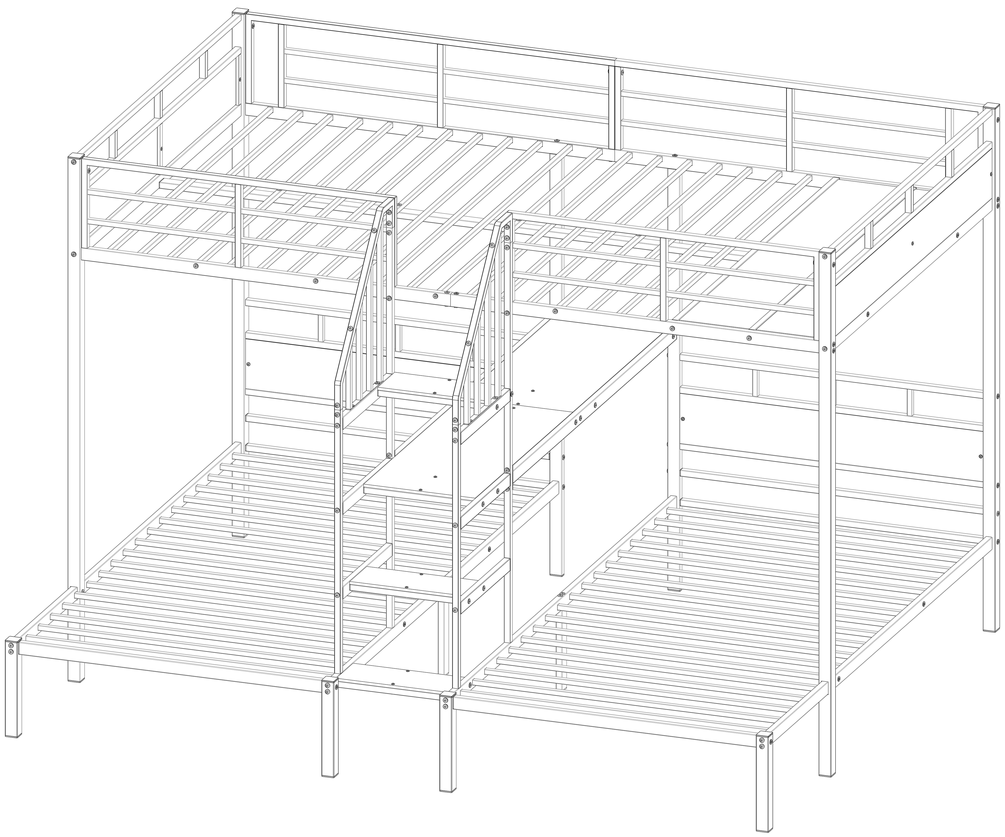

SAFETY WARNINGS AND GENERAL NOTES:

1. Follow the information on the warnings on the bunk bed end structure and on the carton. Do not remove the waming label from the bed.
2. Always use the recommended size mattress on mattress support,or both, to help prevent the likelihood of entrapment or falls.
3. Do not allow children under 6 years of age to use the upper bunk.
4. Periodically check and ensure the guardrail, ladder and other components are in their proper position, free from damage, and all connectors are tight.
5. Do not allow horseplay on or under beds.
6. Always prohibit jumping on the bed.
7. Prohibit more than one person on upper bunk.
8. Always use the ladder for entering and leaving the upper bunk.
9. Do not use substitute parts. Contact the manufacturer or dealer for replacement parts.
10. Use of a night-tight may provide added safety precaution for a child using the upper bunk.
11. Always use guardrails on both long sides of the upper bunk.
12. If the bunk bed will be placed next to a wall, the guardrail that runs the full length of the bed should be placed against the wall to prevent entrapment between the bed and the wall.
The use of water or sleep flotation mattresses is prohibited.
13. **STRANGULATION HAZARD**-Never attach or hang items to any part of the bunk bed that are not designed for use with the bed ; for example, but not limited to, hooks, belts and jump ropes.
14. Keep these instructions for future reference.
15. We recommend assembling your bunk bed on the shipping carton to protect your floor or carpet.
16. Be certain all staples are out of the box before beginning assembly on the shipping carton.
17. USE ONLY MATTRESSES WHICH ARE AS THE TABLE BELOW ON UPPER AND ON LOWER BUNKS.

Down bed

Bed type	Length	Width	Thickness
Twin Standard	74″ - 75″	38 ½"	8″ max

Up bed (bunk bed and tribed included)

Bed type	Length	Width	Thickness
full XL Standard	79″ -80″	54 ½"	6″ max

(A storage board has been added, so you can put both the twin mattress and the twin xl mattress, and there is also an additional storage space.)

18. SURFACE OF MATTRESS MUST BE AT LEAST 5"(127MM) BELOW THE UPPER EDGE OF GUARDRAILS.
19. Replacement Parts:
Replacement Parts, including additional guardrails, may be obtained from any of our (Shenzhen Yuefeng Zhiqi Technology Co., Ltd) dealers.

Release preview of bed components

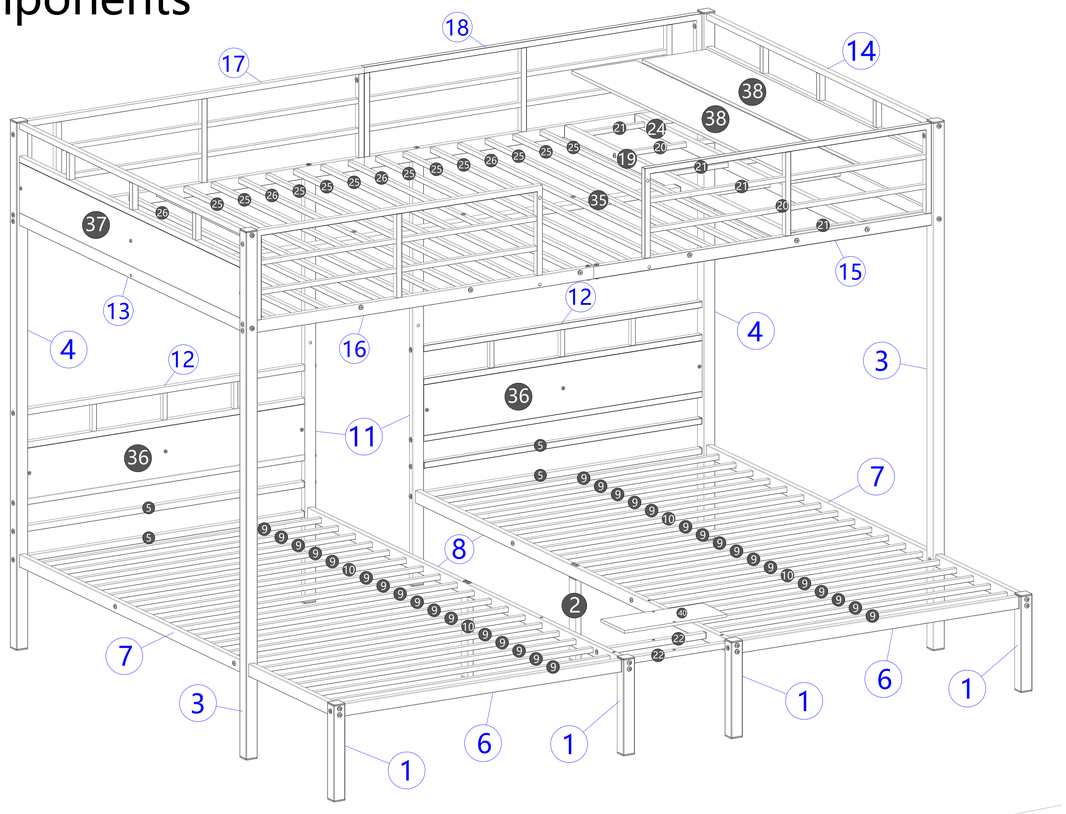

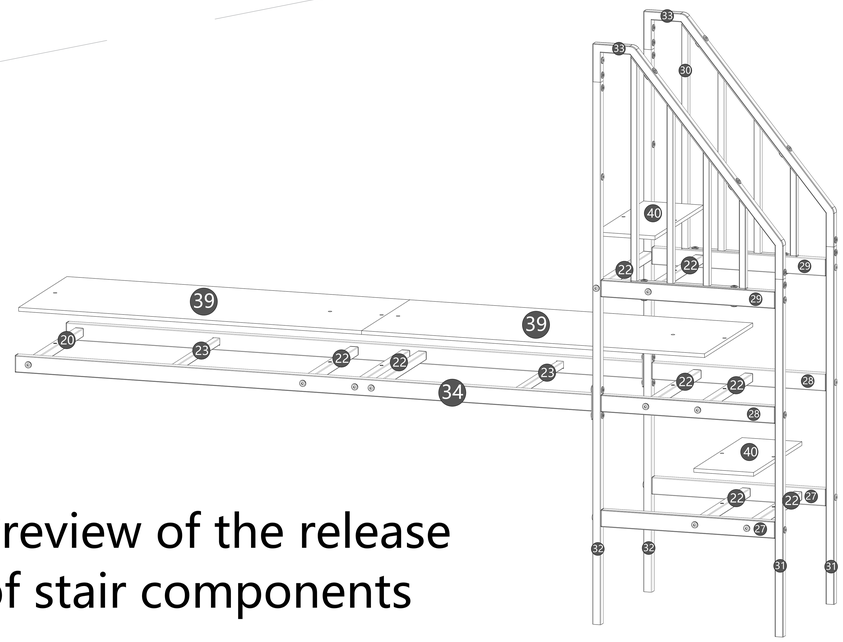

Preview of the release of stair components

List of components

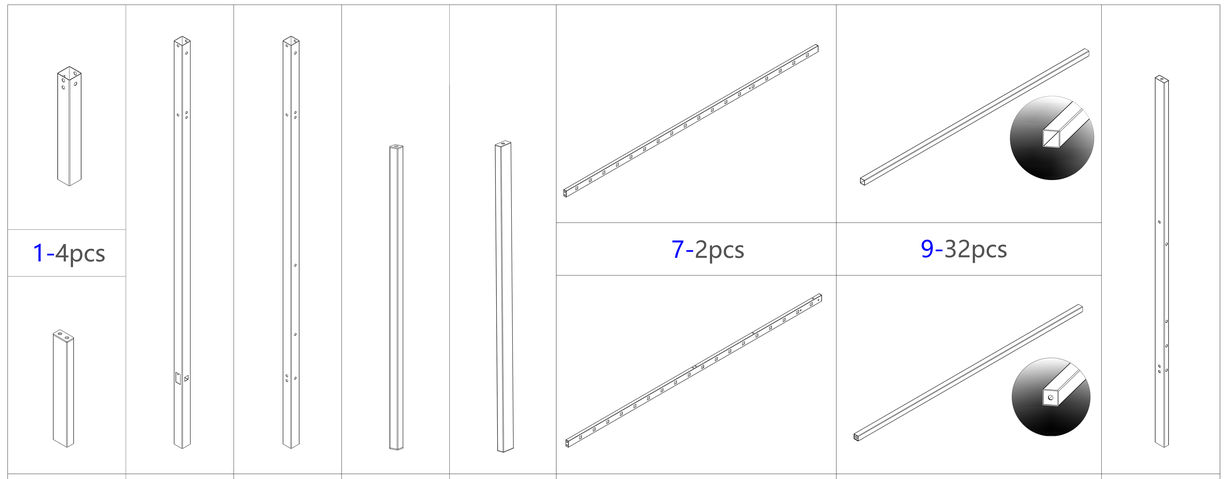 1-4pcs					7-2pcs	9-32pcs	
					8-2pcs	10-4pcs	
2-2pcs	3-2pcs	4-2pcs	5-4pcs	6-2pcs			11-2pcs
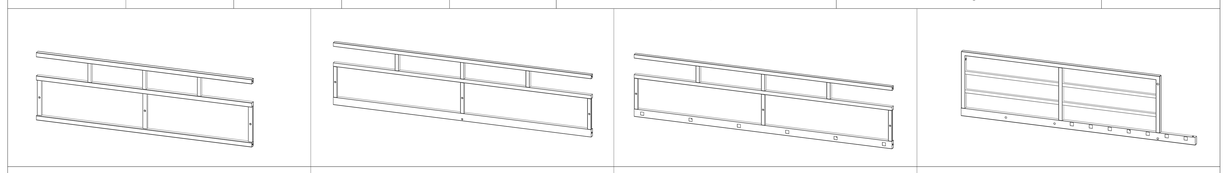							
12-2pcs	13-1pcs	14-1pcs	15-1pcs				
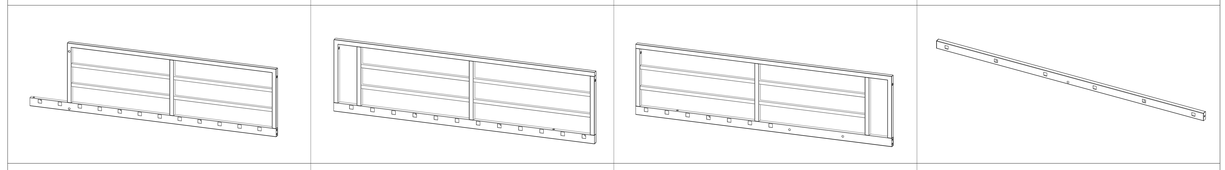							
16-1pcs	17-1pcs	18-1pcs	19-1pcs				
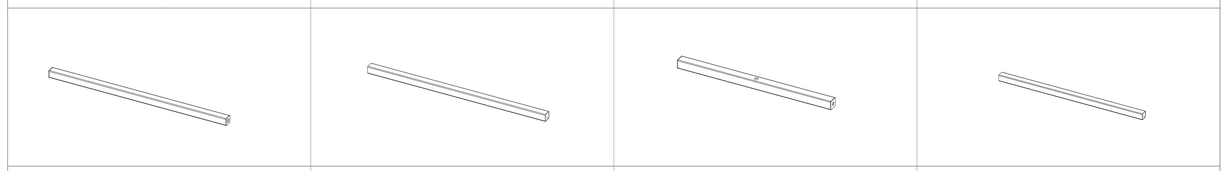							
20-2pcs	21-4pcs	22-12pcs	23-2pcs				
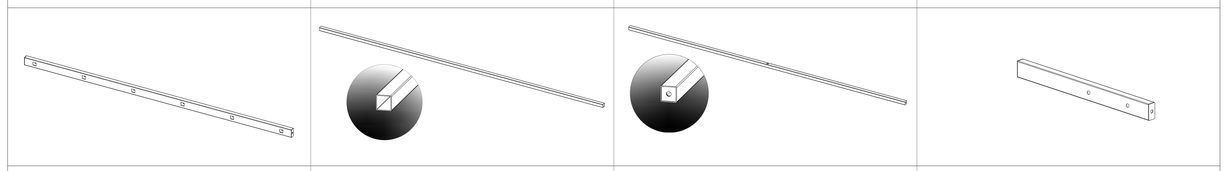							
24-1pcs	25-15pcs	26-4pcs	27-2pcs				
28-2pcs	29-2pcs	30-2pcs	31-2pcs				

Board list

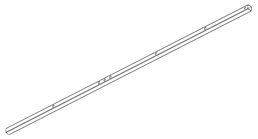		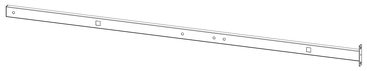
32-2pcs	33-2pcs	34-2pcs
	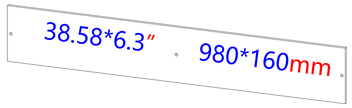	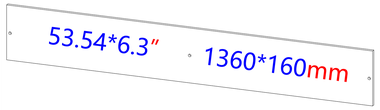
35-1pcs	36-2pcs	37-2pcs
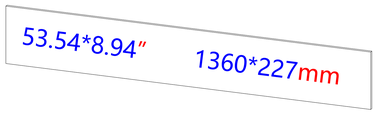	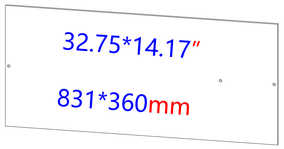	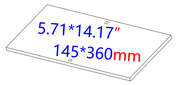
38-2pcs	39-2pcs	40-3pcs

HARDWARE LIST

A	B	C	D	E	F	G
M8*55-62pcs	M8*30-58pcs	M8*15-44pcs	ΦM8*16-25pcs	M6*15-12pcs	M6*25-12pcs	ΦM6*10-24pcs
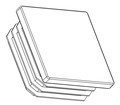 T	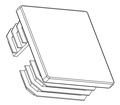 Q	Y	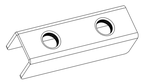 H	W	L M5*25-2pcs M	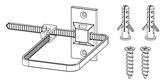 k
40*40F-8pcs	40*40FQ-8pcs	20*40-4pcs	18*60 -7pcs	M8*35-4pcs	M4*25-2pcs	2pcs

Step 1: Use hardware A, T, Q , L to connect #1 and #6 together.Get 2 1# components

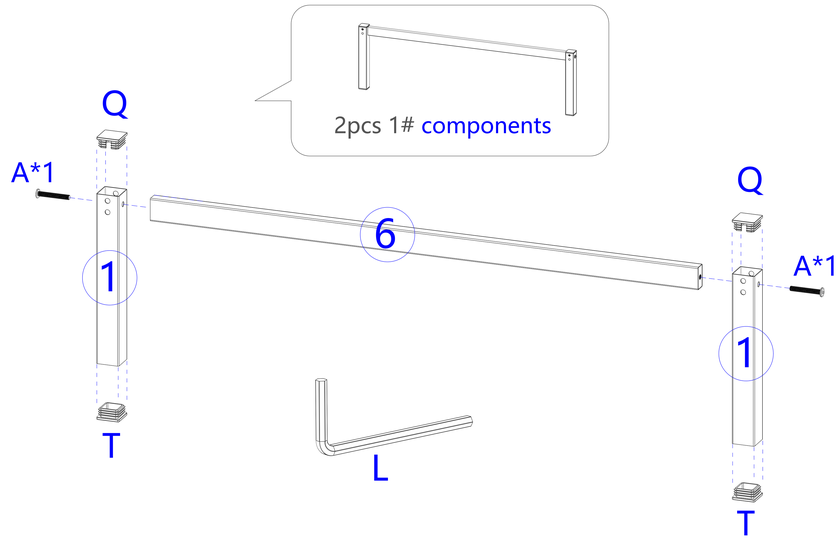

		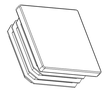 T	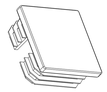 Q	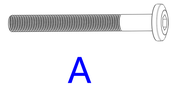 A
6-2pcs	1-4pcs	40*40F-4pcs	40*40FQ-4pcs	M8*55-4pcs

Step 2: Use hardware E, G, M to connect #12 and #36 together.Get 2 12# components

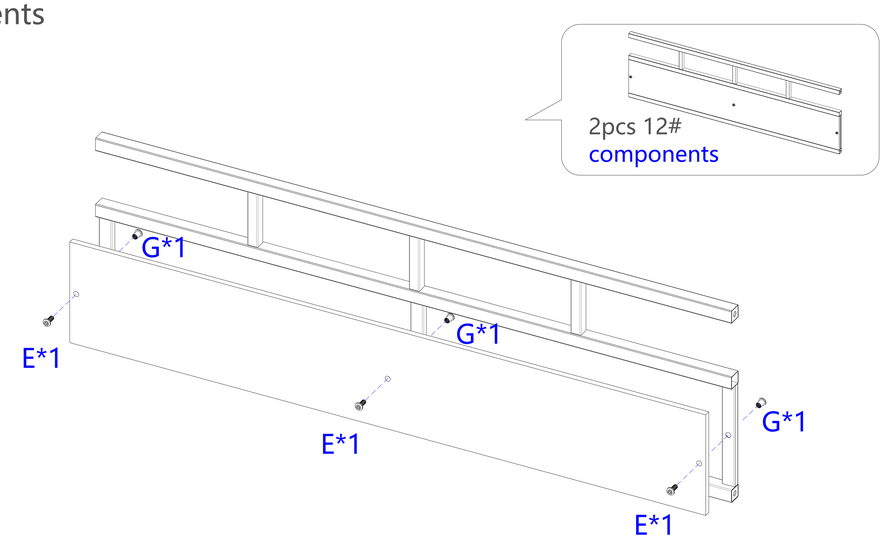

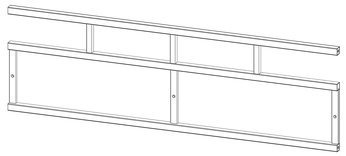	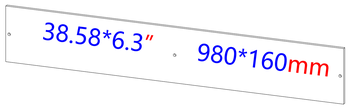	E	G	M
12-2pcs	36-2pcs	M6*15-6pcs	ΦM6*10-6pcs	

Step 3: Use hardware A,Q, Y ,F, L to connect #4,#11,#5 and #12 components together.

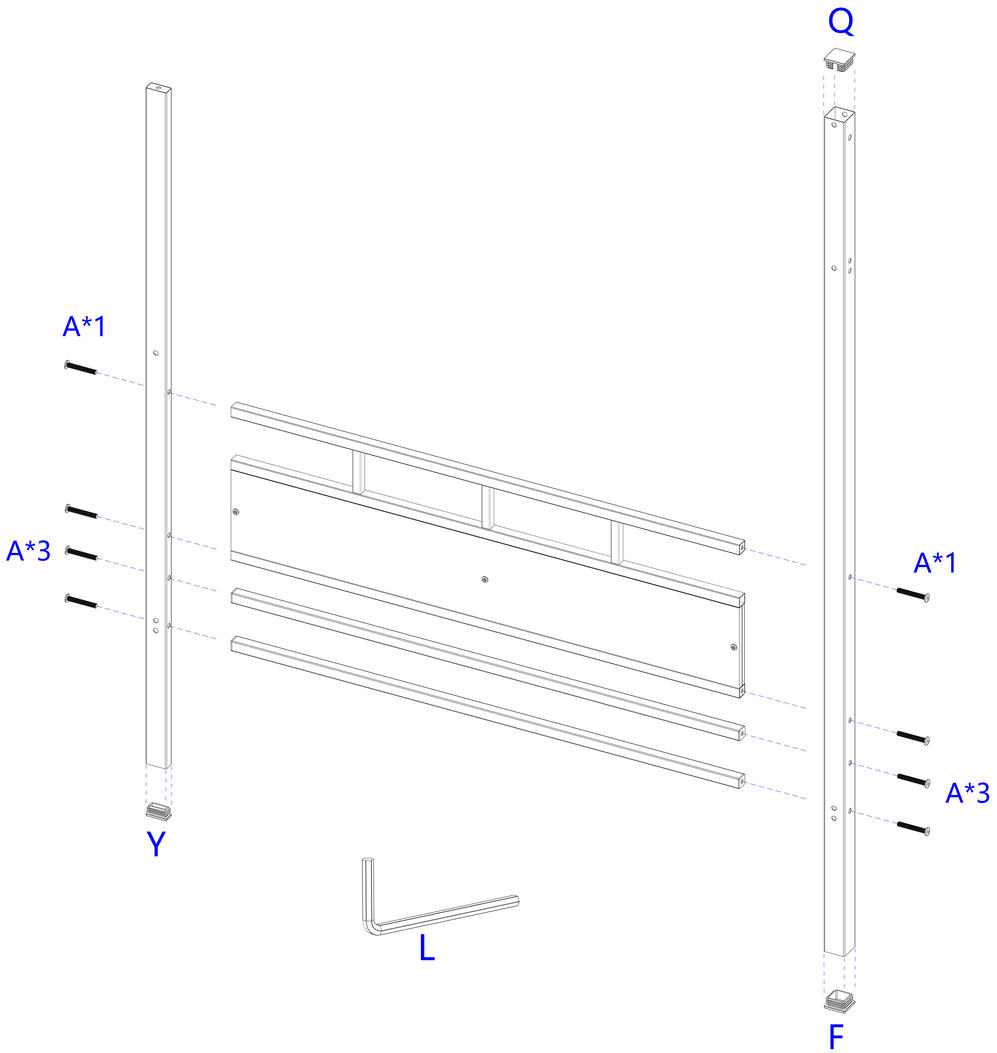

4-1pcs	11-1pcs	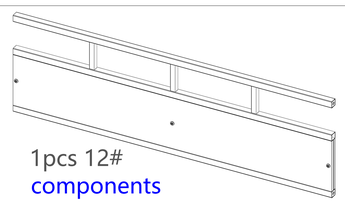 1pcs 12# components	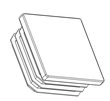 F 40*40F-1pcs	Y 20*40-1pcs
		5-2pcs	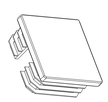 Q 40*40FQ-1pcs	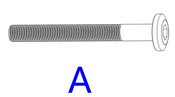 A M8*55-8pcs

Step 4: Use hardware A,Q, C ,F, L to connect #3, and #7 together.Pay attention to the installation direction of hole #7

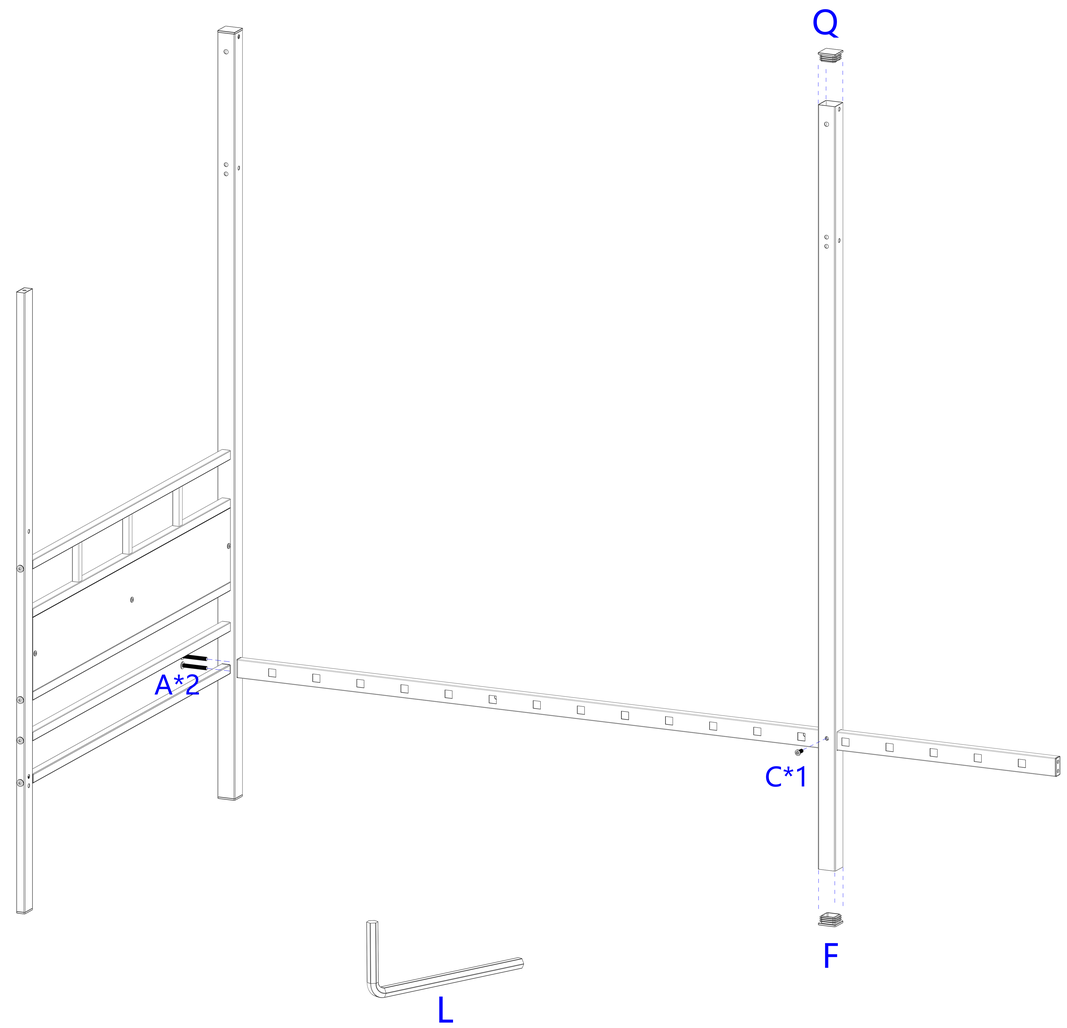

	3-1pcs	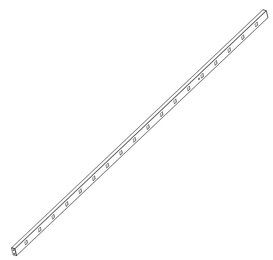 7-1pcs	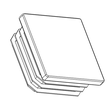 F 40*40F-1pcs	A M8*55-2pcs
			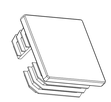 Q 40*40FQ-1pcs	C M8*15-1pcs

Step 5: Use hardware A, B,C,Y, L to connect #2, #8, #9 and #10 together.

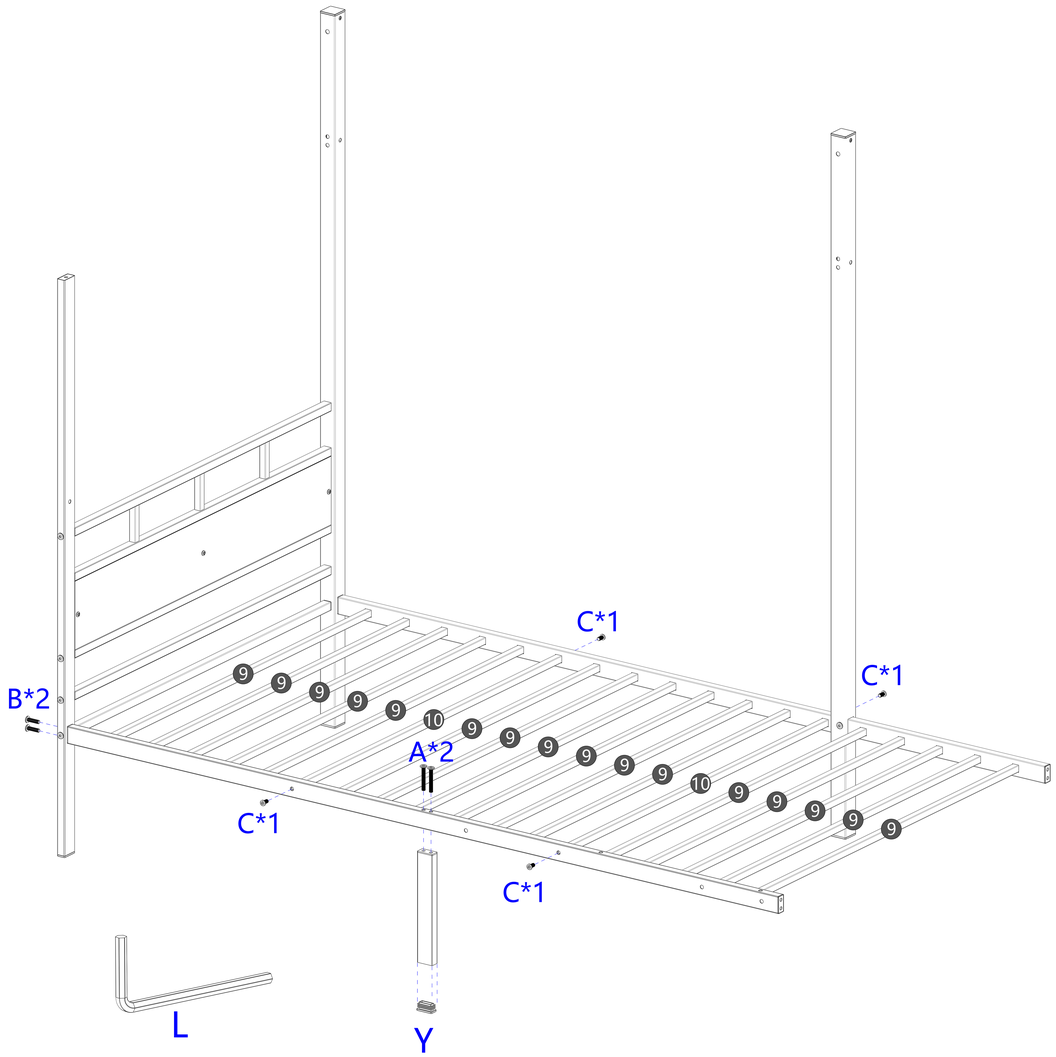

2-1pcs	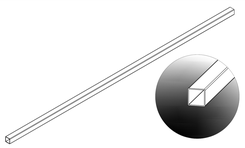 9-16pcs	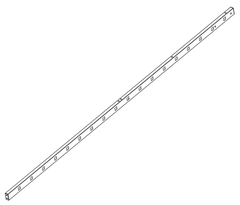 8-1pcs	Y 20*40-1pcs	A M8*55-2pcs
	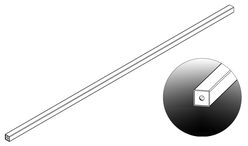 10-2pcs		B M8*30-2pcs	C M8*15-4pcs

Step 6: Use hardware A, L to connect1# components together.

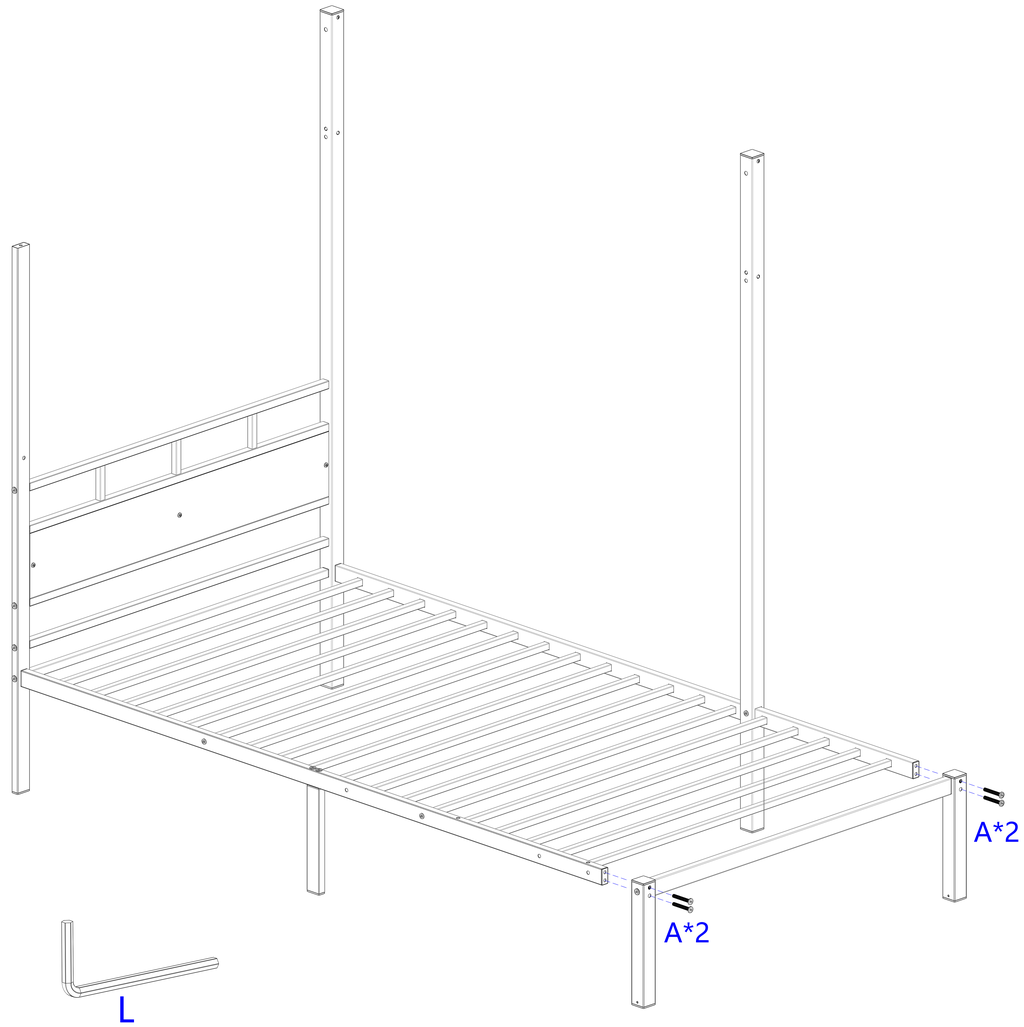

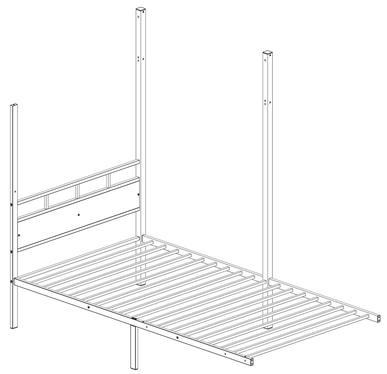	1# components	A M8*55-4pcs

Step 7: Use hardware A,Q, Y ,T, L to connect #4,#11,#5 and #12 components together.

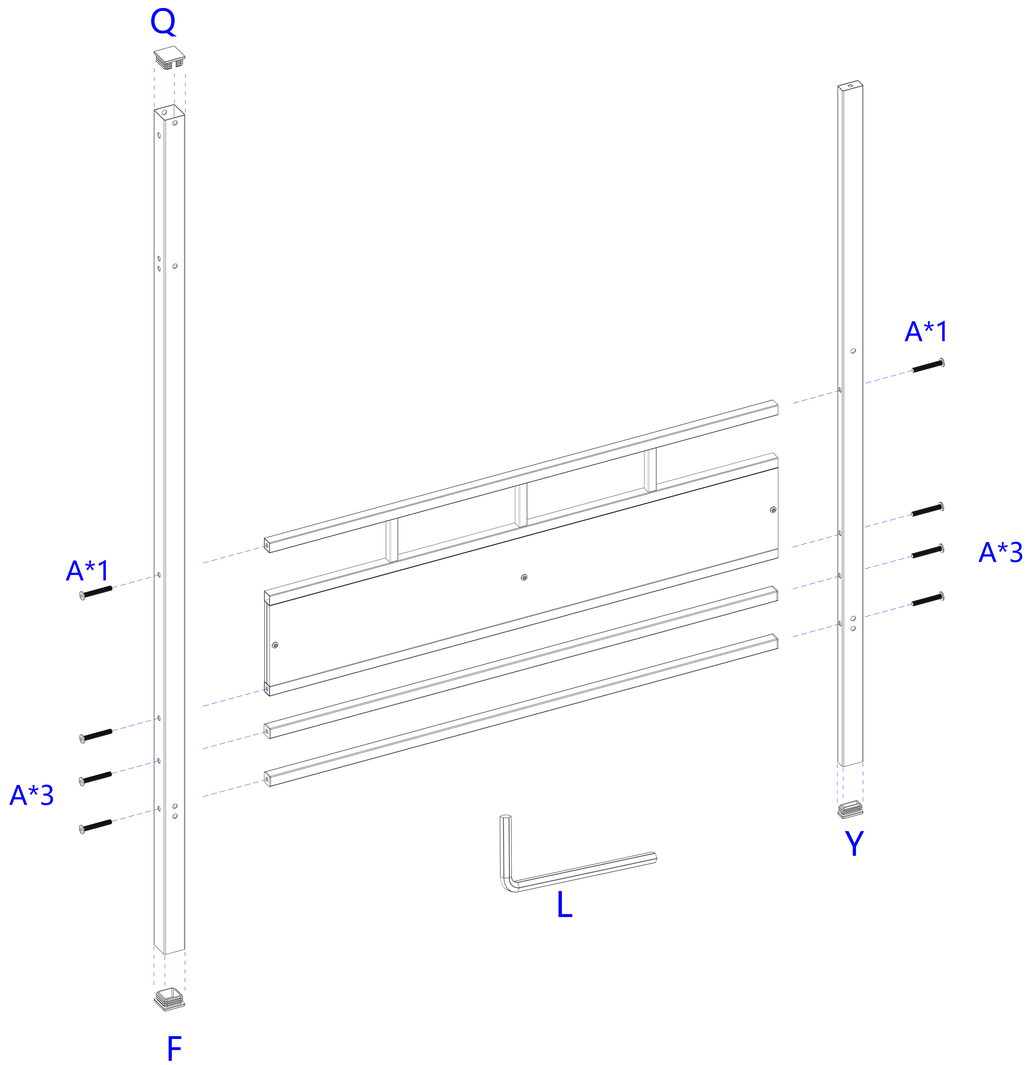

4-1pcs	11-1pcs	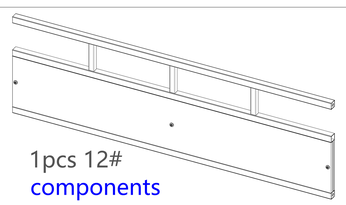 1pcs 12# components	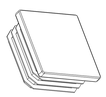 T 40*40F-1pcs	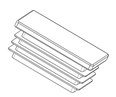 Y 20*40-1pcs
		5-2pcs	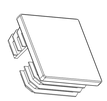 Q 40*40FQ-1pcs	A M8*55-6pcs

Step 8: Use hardware A,Q, C ,T, L to connect #3, and #7 together.Pay attention to the installation direction of hole #7

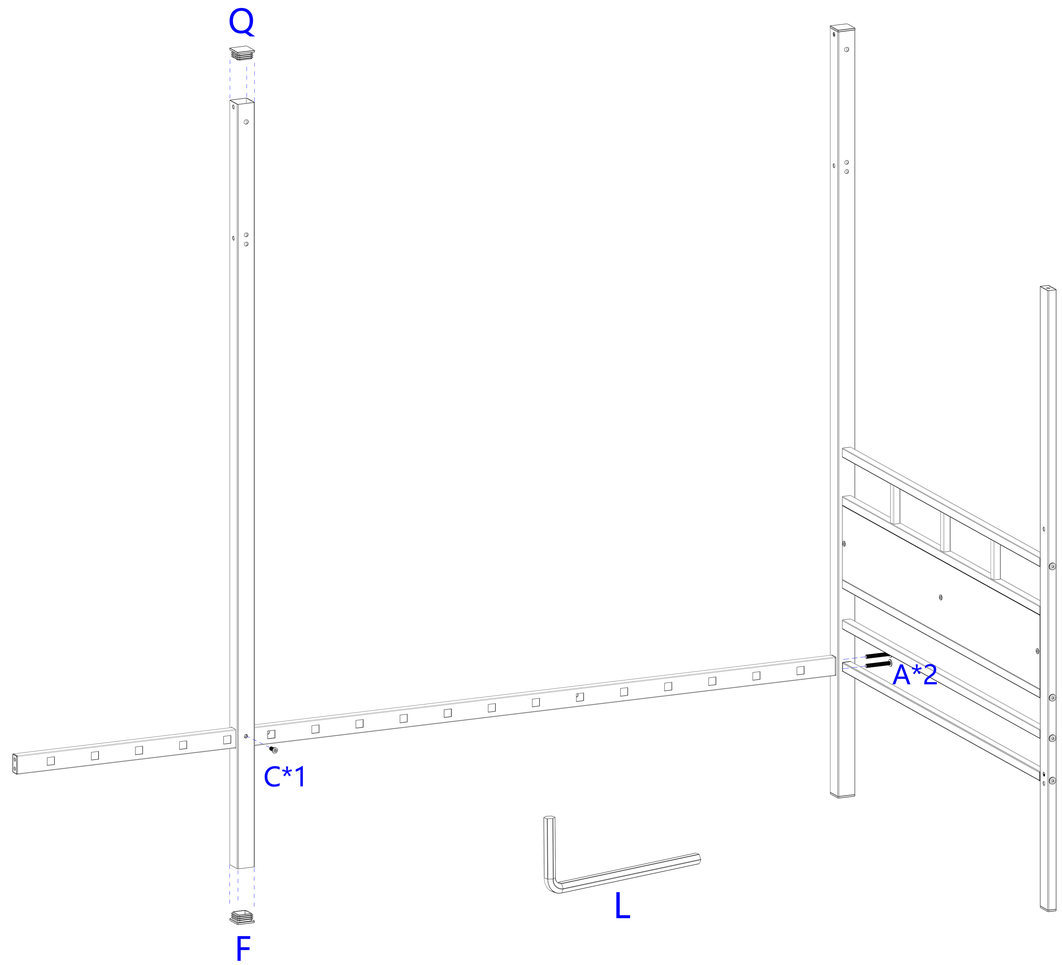

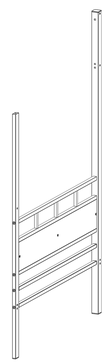	3-1pcs	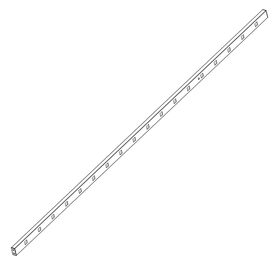 7-1pcs	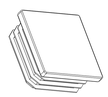 T 40*40F-1pcs	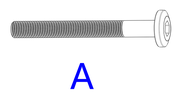 A M8*55-2pcs
			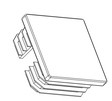 Q 40*40FQ-1pcs	C M8*15-1pcs

Step 9: Use hardware A, B,C,Y, L to connect #2, #8, #9 and #10 together.

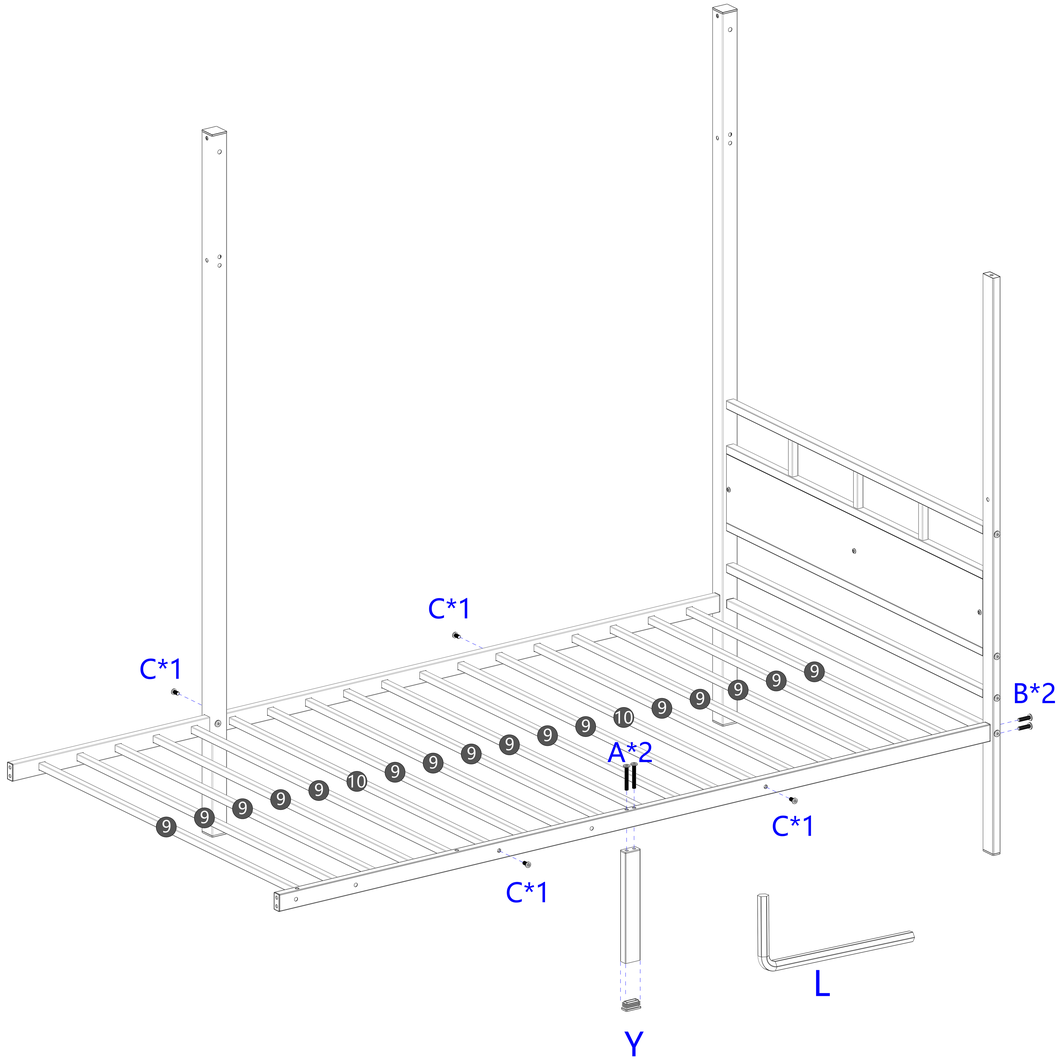

2-1pcs	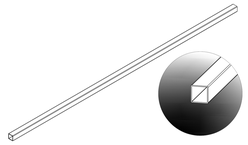 9-16pcs	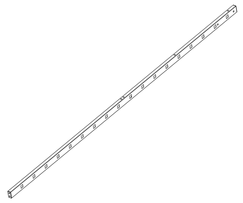 8-1pcs	Y 20*40-1pcs	A M8*55-2pcs
	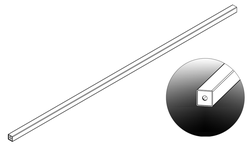 10-2pcs		B M8*30-2pcs	C M8*15-4pcs

Step 10: Use hardware A, L to connect1# components together.

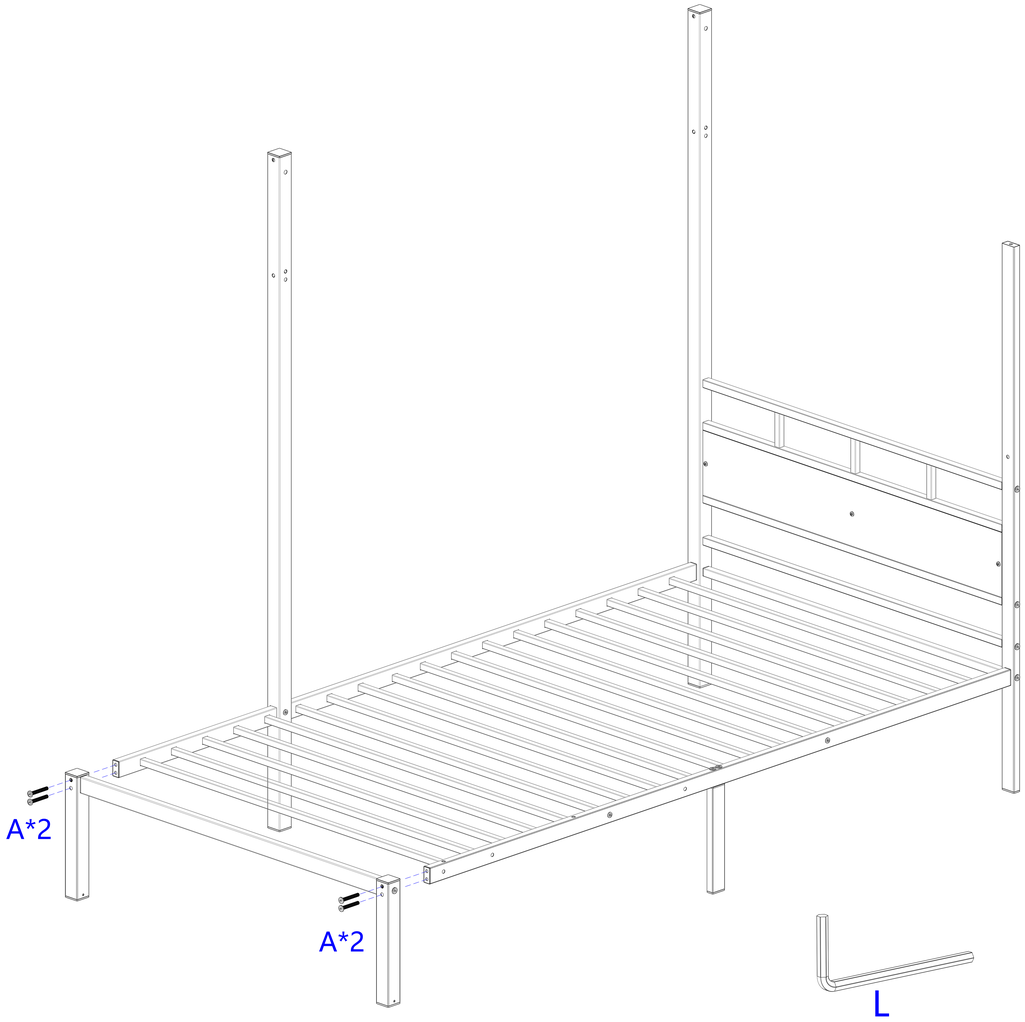

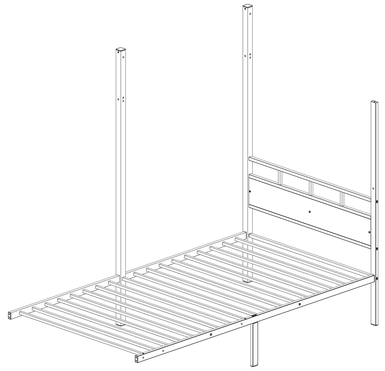	1# components	A M8*55-4pcs

Step 11: Use hardware E, G, M to connect #13 and #37 together.Get 1 13# components

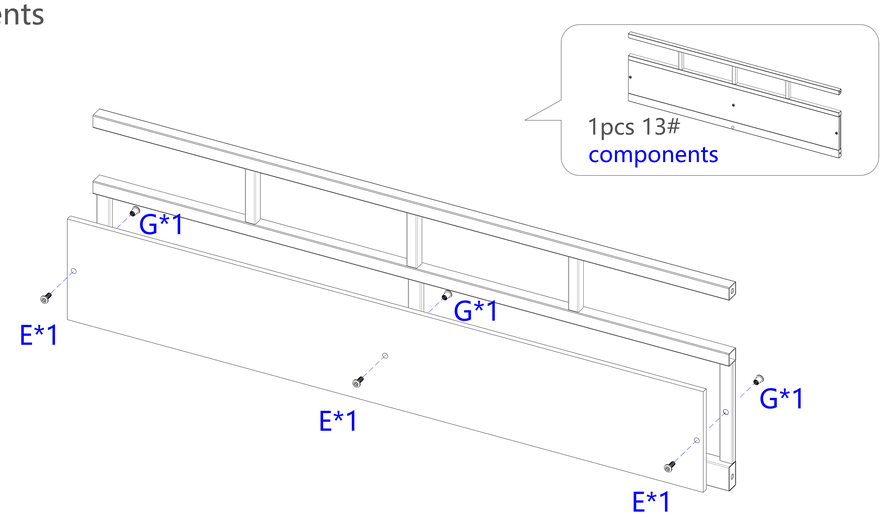

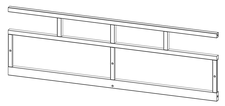 13-1pcs	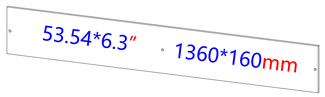 37-1pcs	E M6*15-3pcs	G ΦM6*10-3pcs	M

Step 12: Use hardware E, G, M to connect #14 and #37 together.Get 1 14# components

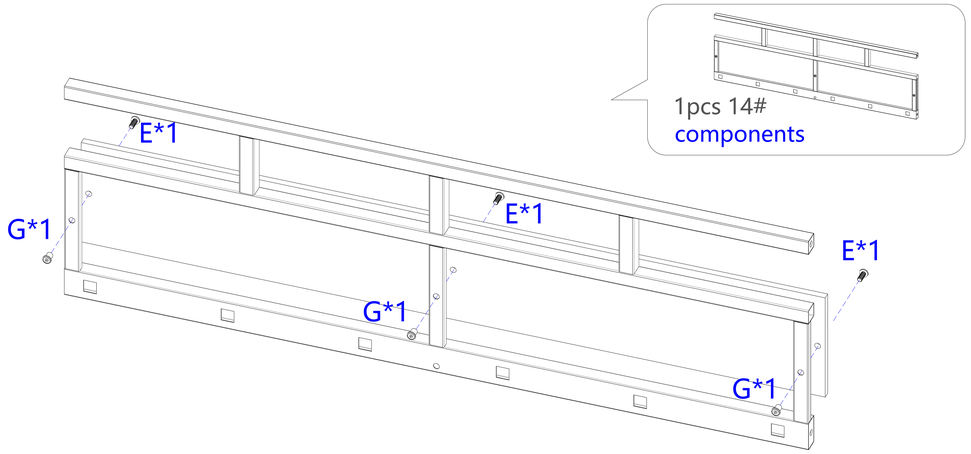

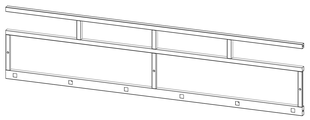 14-1pcs	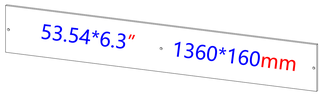 37-1pcs	E M6*15-3pcs	G ΦM6*10-3pcs	M

Step 13: Use hardware C,H , L to connect #15 and #16 together.

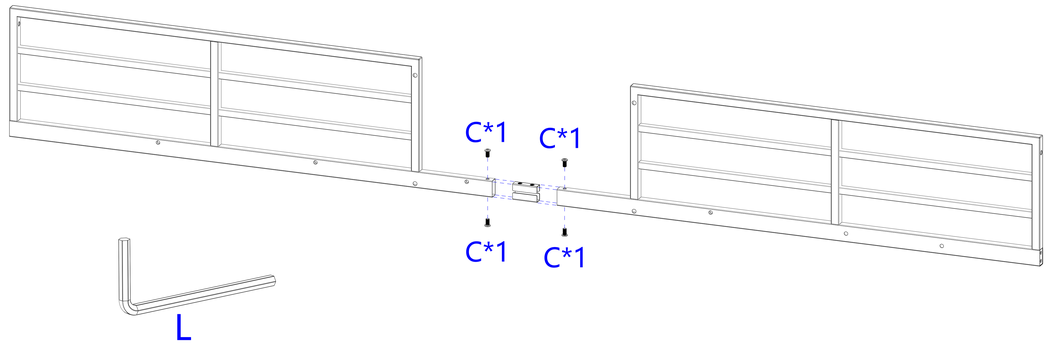

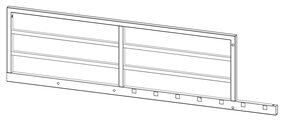 15-1pcs	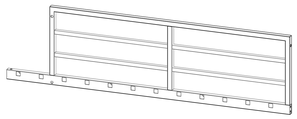 16-1pcs	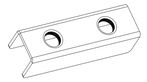 H 18*60 -2pcs	C M8*15-4pcs

Step 14: Use hardware B, C, D, H , L to connect #17 and #18 together.

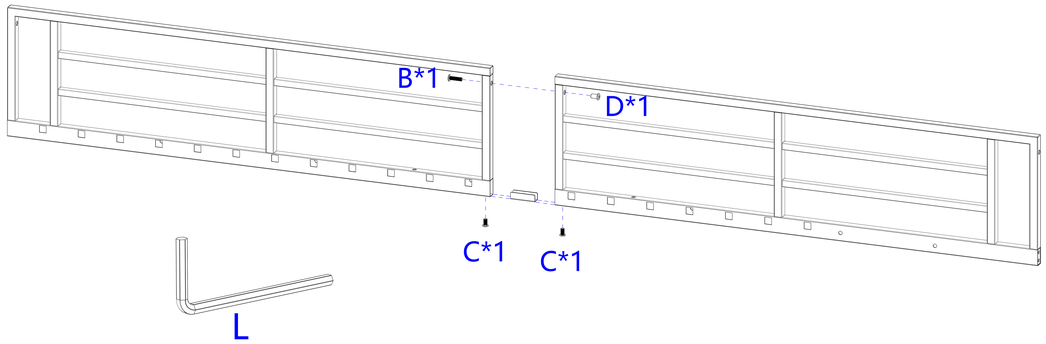

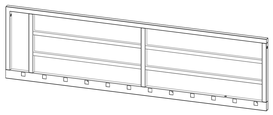 17-1pcs	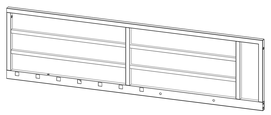 18-1pcs	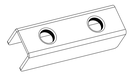 H 18*60 -1pcs	B M8*30-1pcs	D ΦM8*16-1pcs	C M8*15-2pcs

Step 15: Use hardware B, F, M , L , G to connect #40 and #22 together.

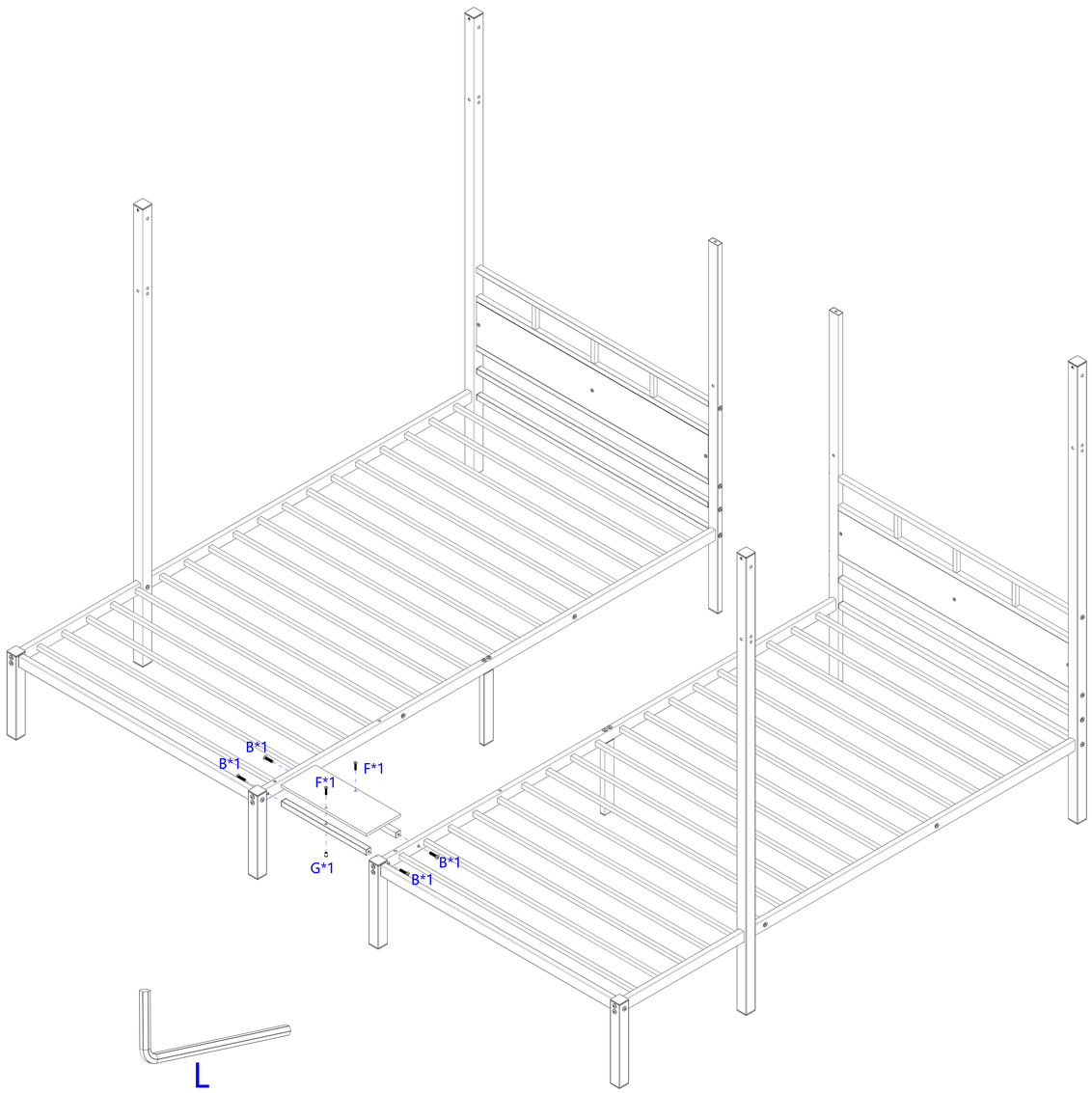

Step 16: Use hardware A, D and L to connect the previously assembled shelves #15, #16, #17 and #18

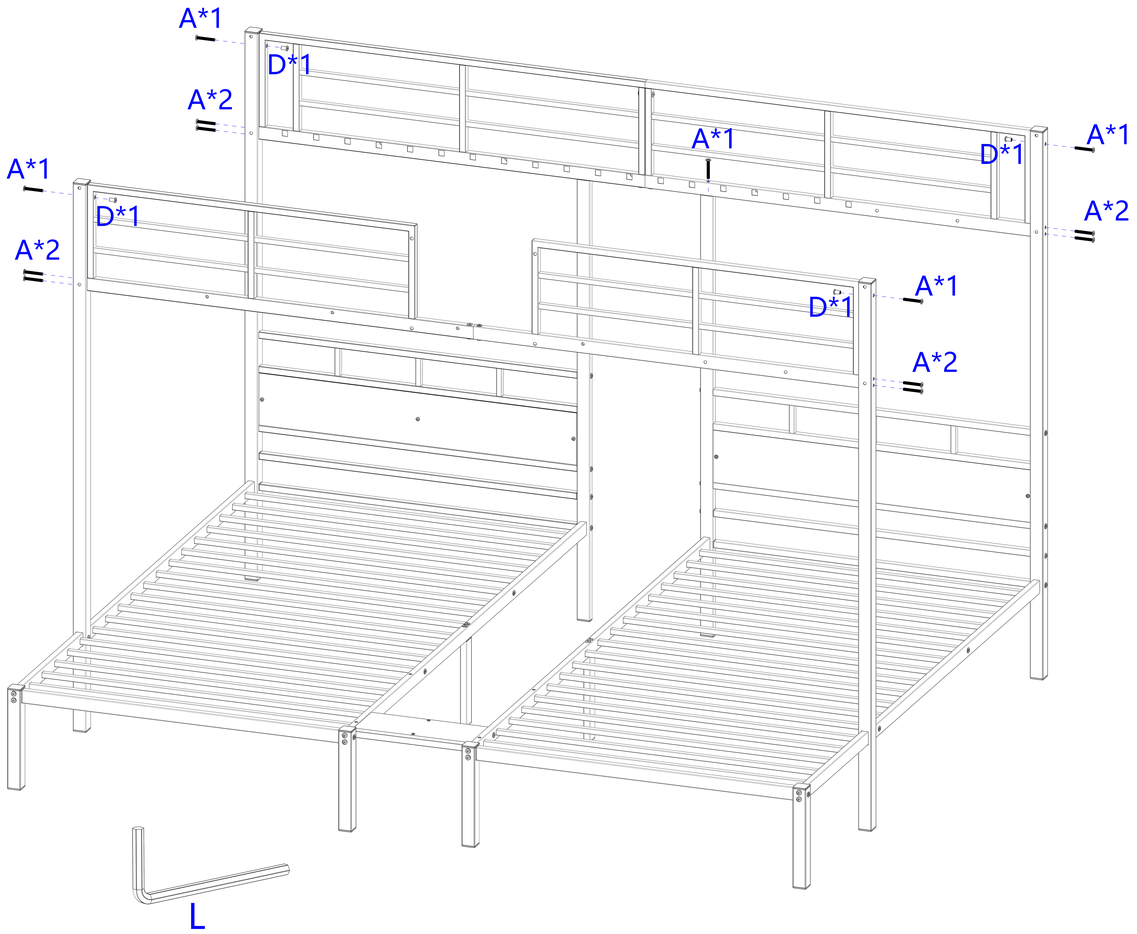

5.71*14.17″ 145*360mm 40-1pcs	22-3pcs	B M8*30-6pcs	F M6*25-3pcs	G ΦM6*10-3pcs	M

		A M8*55-14pcs	D ΦM8*16-4pcs

Step 17: Insert #25 and #26 into the corresponding hole in order, and use hardware C and L to tighten the screws while inserting to prevent them from falling off.

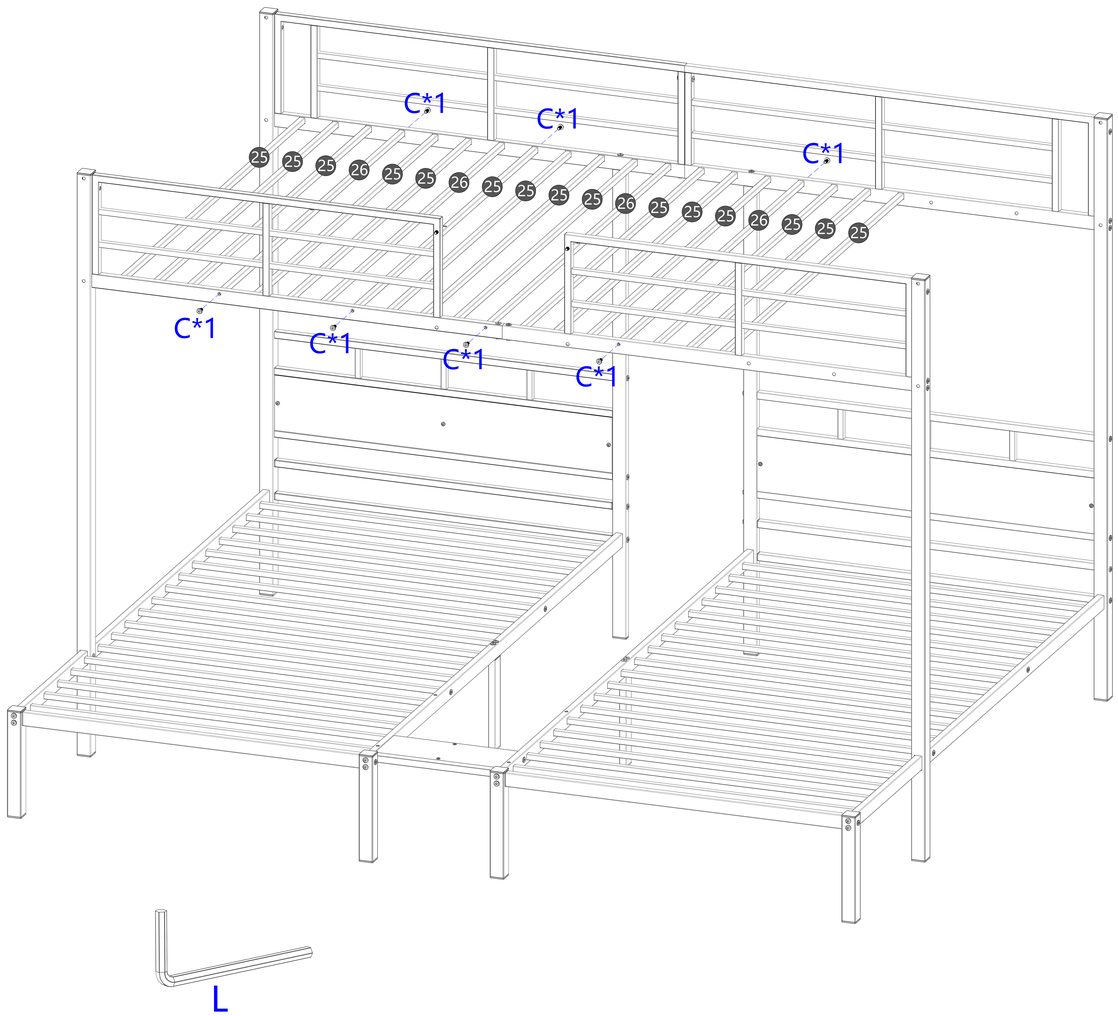

25-15pcs	26-4pcs	C M8*15-8pcs

Step 18: Use hardware L , A, B, D to connect #35,#19 and #13components together.

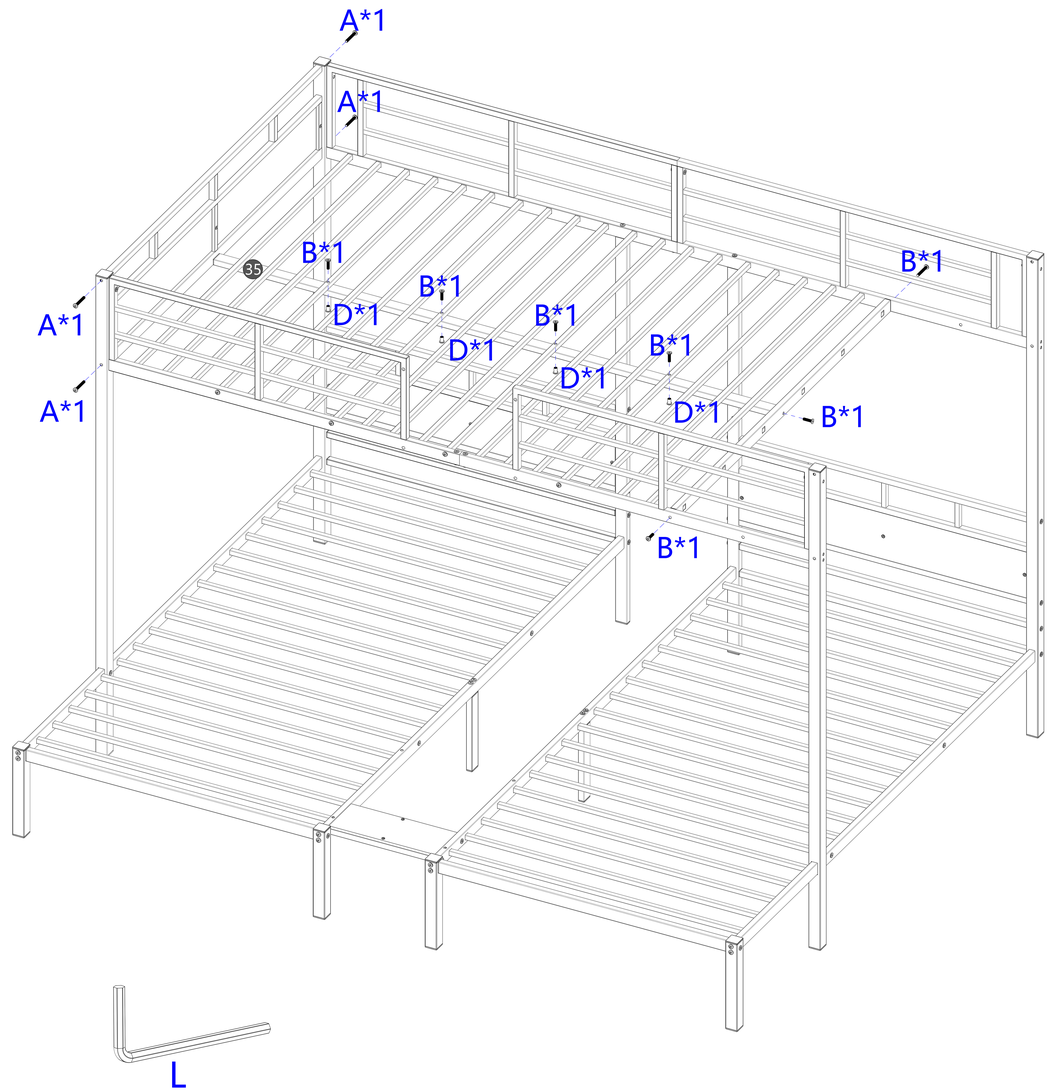

1pcs 13# components	35-1pcs	19-1pcs	A M8*55-4pcs	B M8*30-8pcs D ΦM8*16-4pcs

Step 19: Use hardware L , A, B, C to connect #20,#21,#24 and #14components together.

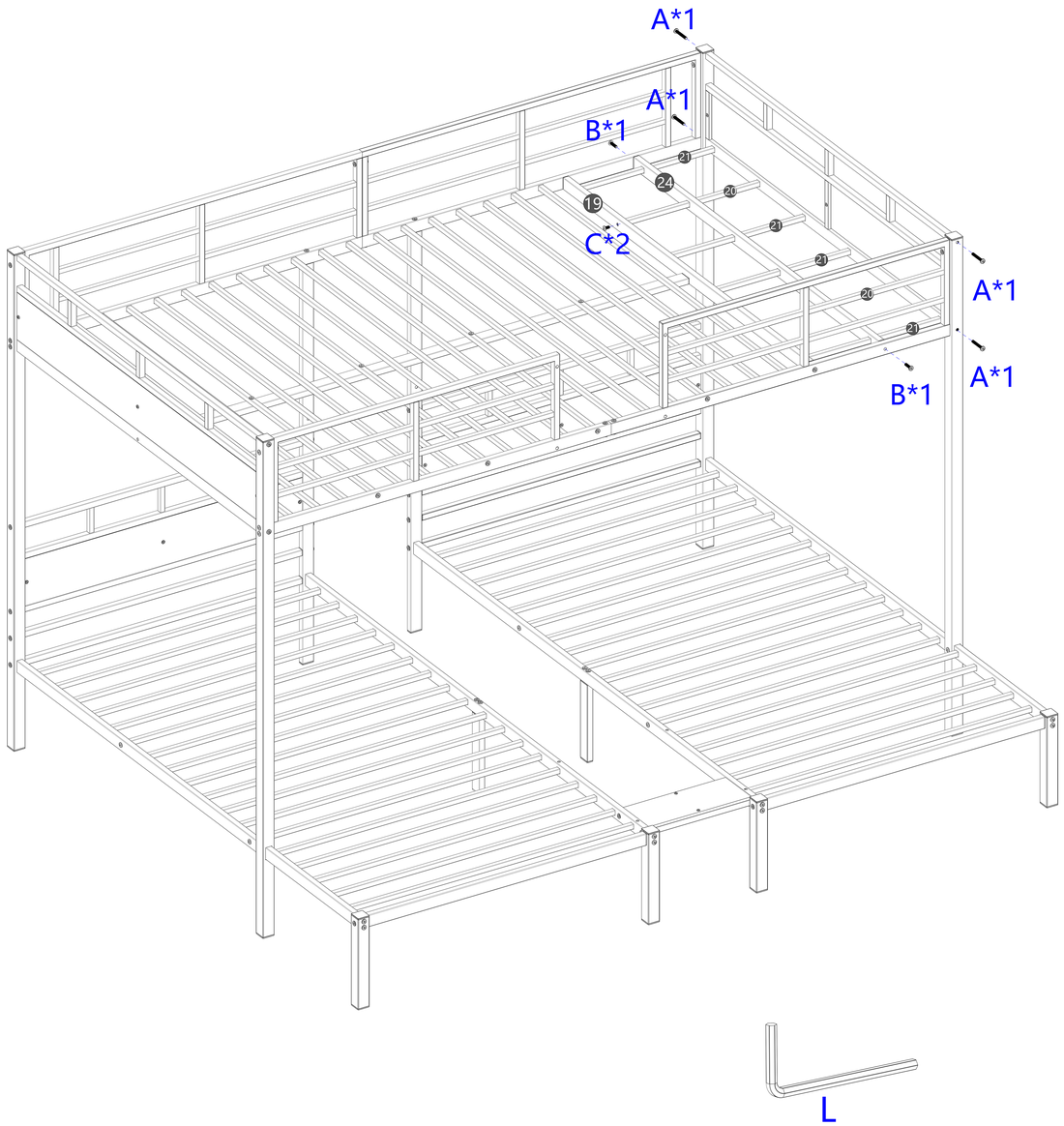

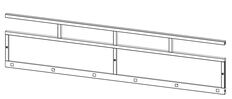 1pcs 14# components	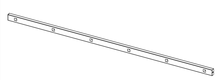 24-1pcs	20-2pcs 21-4pcs	A M8*55-4pcs	B M8*30-2pcs C M8*15-4pcs

Step 20: Put the two layers of #38 into the empty position on the bed and tighten the #20 screw.

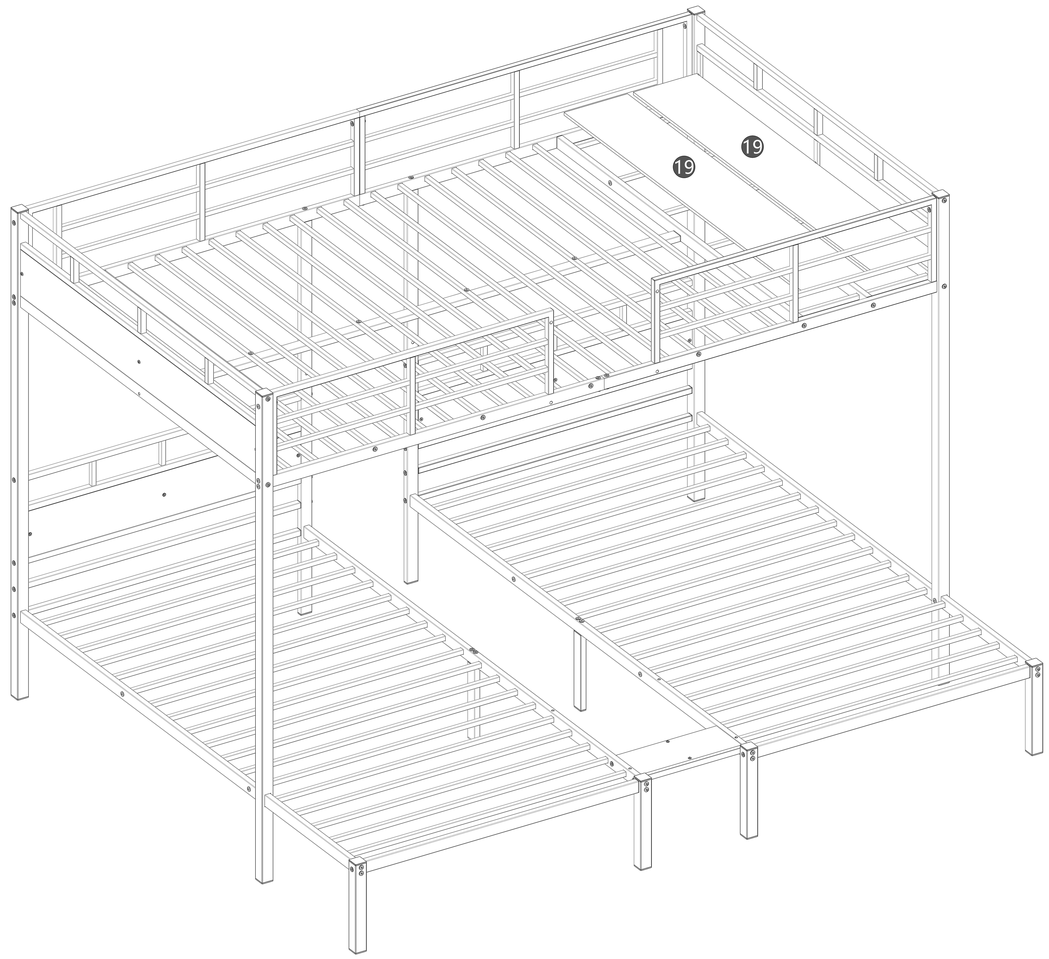

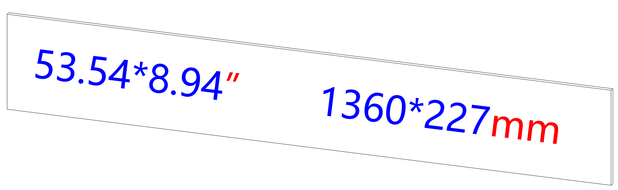

38-2pcs

Step 21: Use hardware B, C, D, H, W, L to connect #27#28#29#30#31#32and #33 together.Get 2pcs Stair bracket

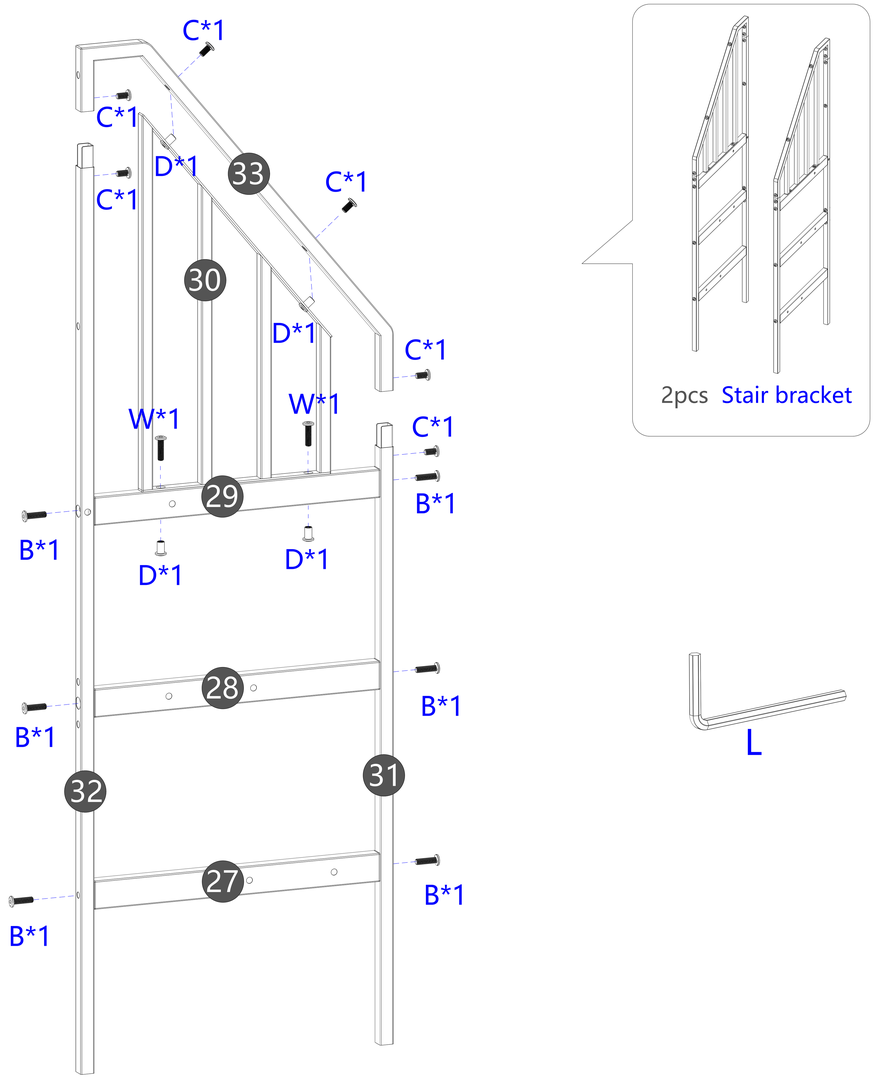

27-2pcs	28-2pcs	33-2pcs	30-2pcs	W M8*35-4pcs	D ΦM8*16-8pcs
29-2pcs	31-2pcs	32-2pcs	H 18*60 -4pcs	B M8*30-12pcs	C M8*15-12pcs

Step 22: Use hardwareF, B, M, G, L to connect #22 #40and 2pcs Stair bracket together.Get 1pcs Stair components

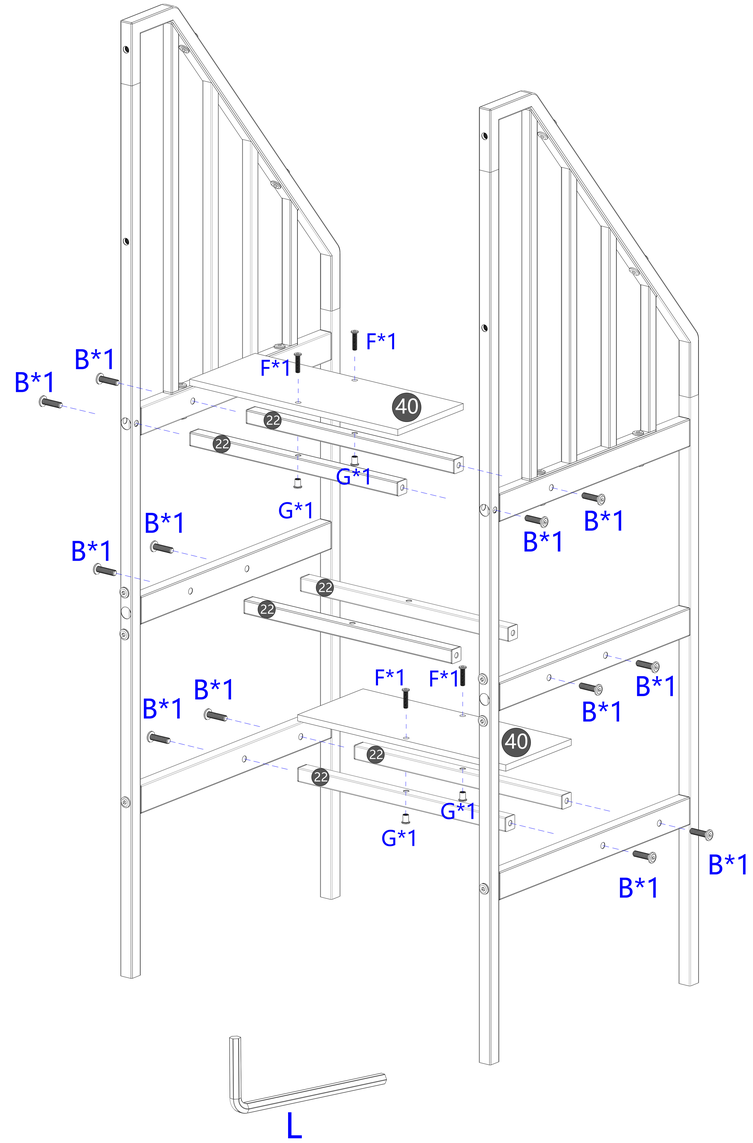

2pcs Stair bracket	40-2pcs	22-6pcs	B M8*30-12pcs	M
			F M6*25-5pcs	G ΦM6*10-4pcs

5.71*14.17"
145*360mm

Step 23: Use hardwareA, B, D, L to connect The stair components are combined with the bed connection.

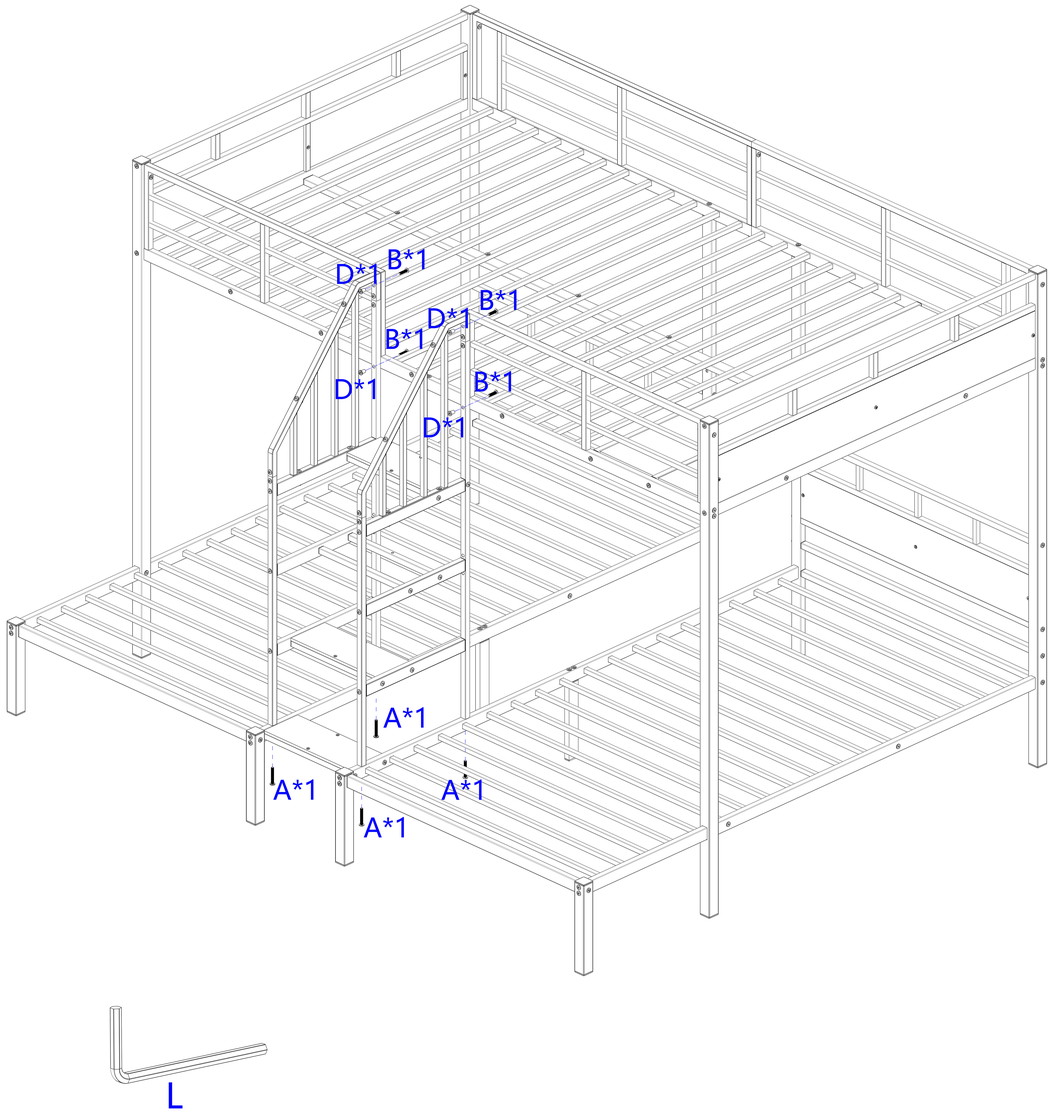

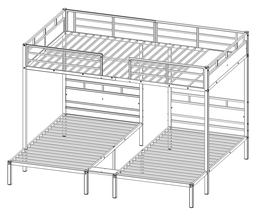		A M8*55-4pcs	B M8*30-4pcs	D ΦM8*16-4pcs

Step 24: Use hardware B,C,D,F,G,M, L to connect #22, #23, #34 and #39 together.

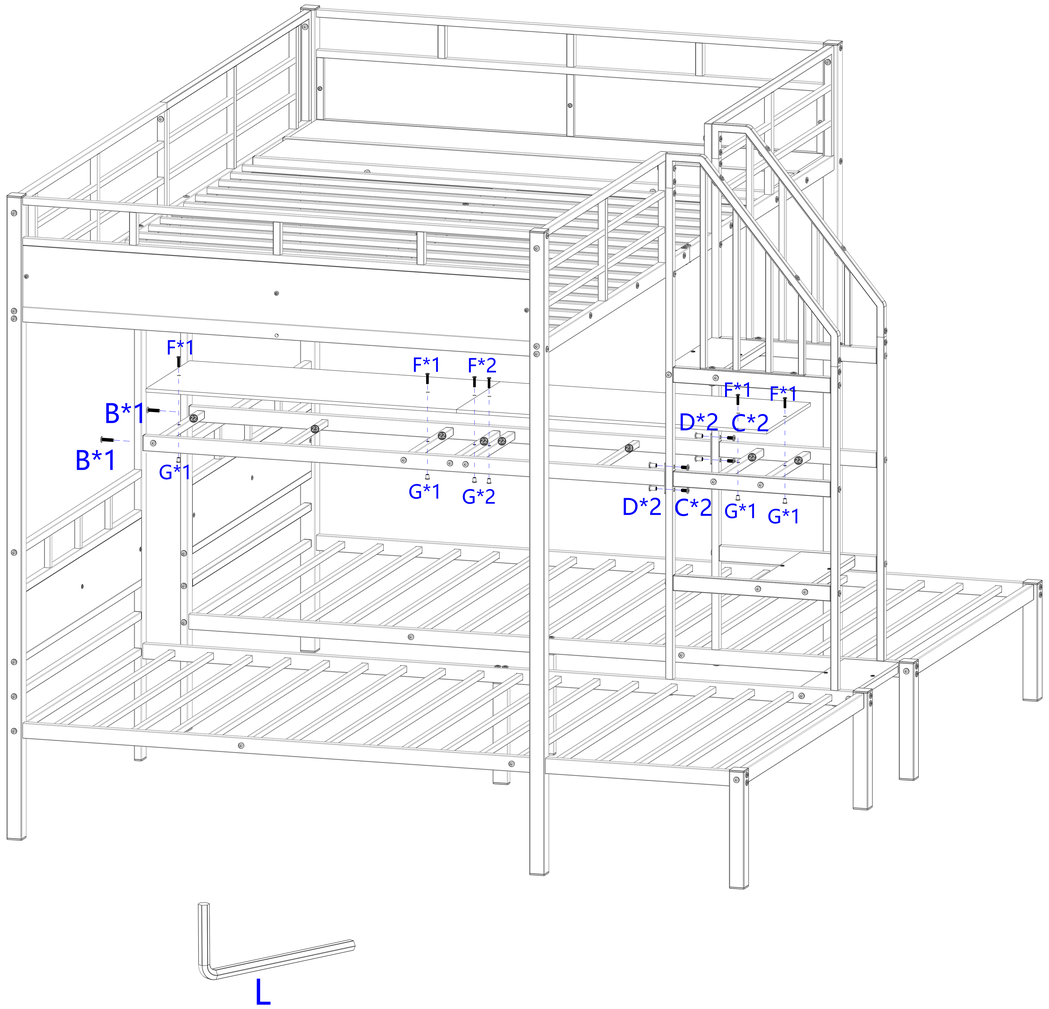

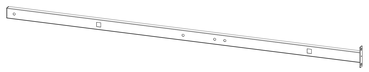 34-2pcs	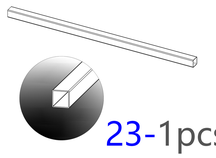 23-1pcs	C M8*15-4pcs	D ΦM8*16-4pcs	M
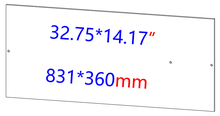 39-2pcs	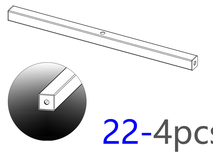 22-4pcs	B M8*30-10pcs	F M6*25-6pcs	G ΦM6*10-6pcs

Fix the wall, prevent movement,
selective installation

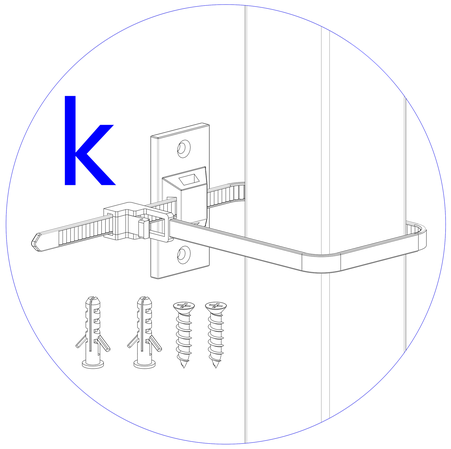

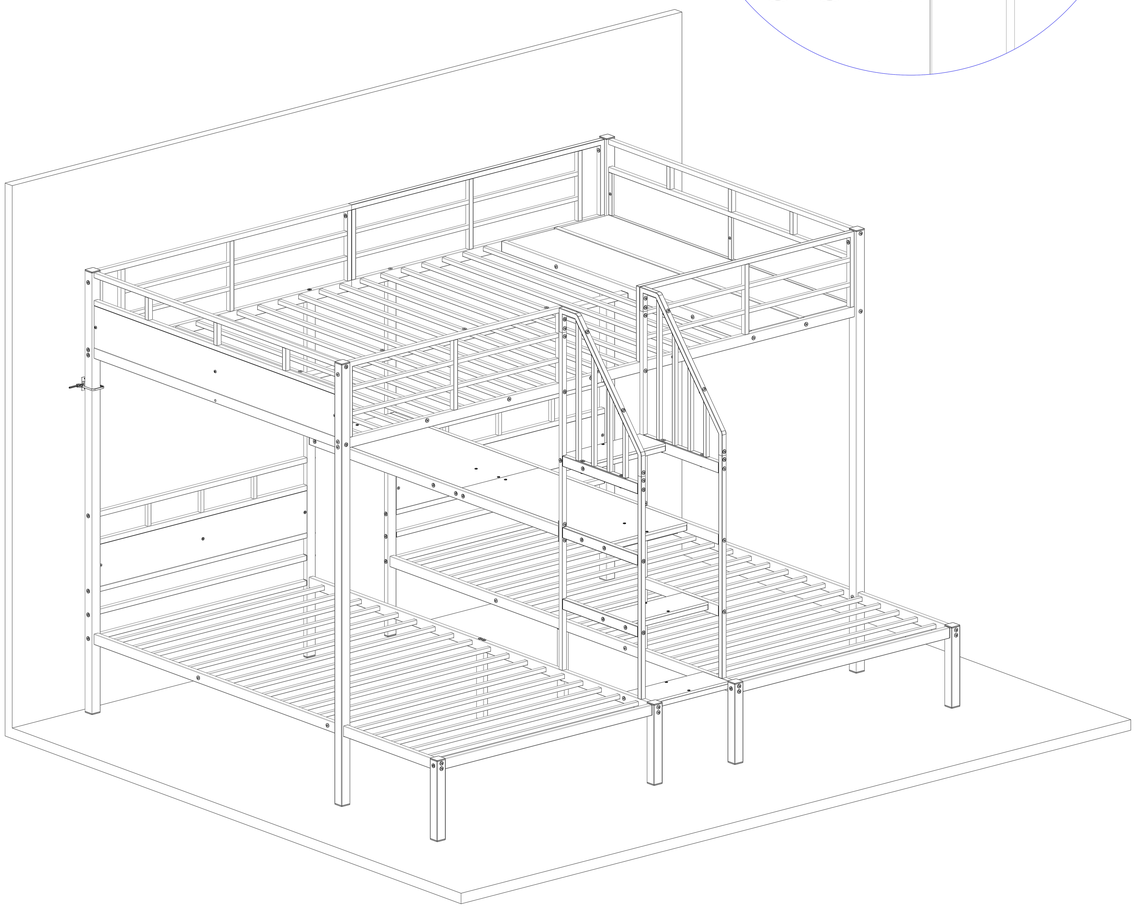

Note: Tighten all the steps before use, thank you.

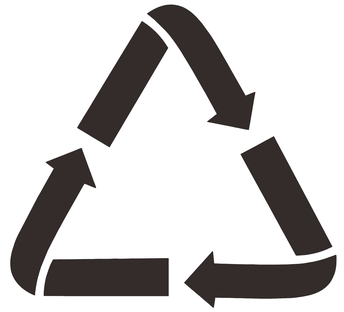

Recyclable garbage