FLUTED SHOE CABINET

Assembly Instruction

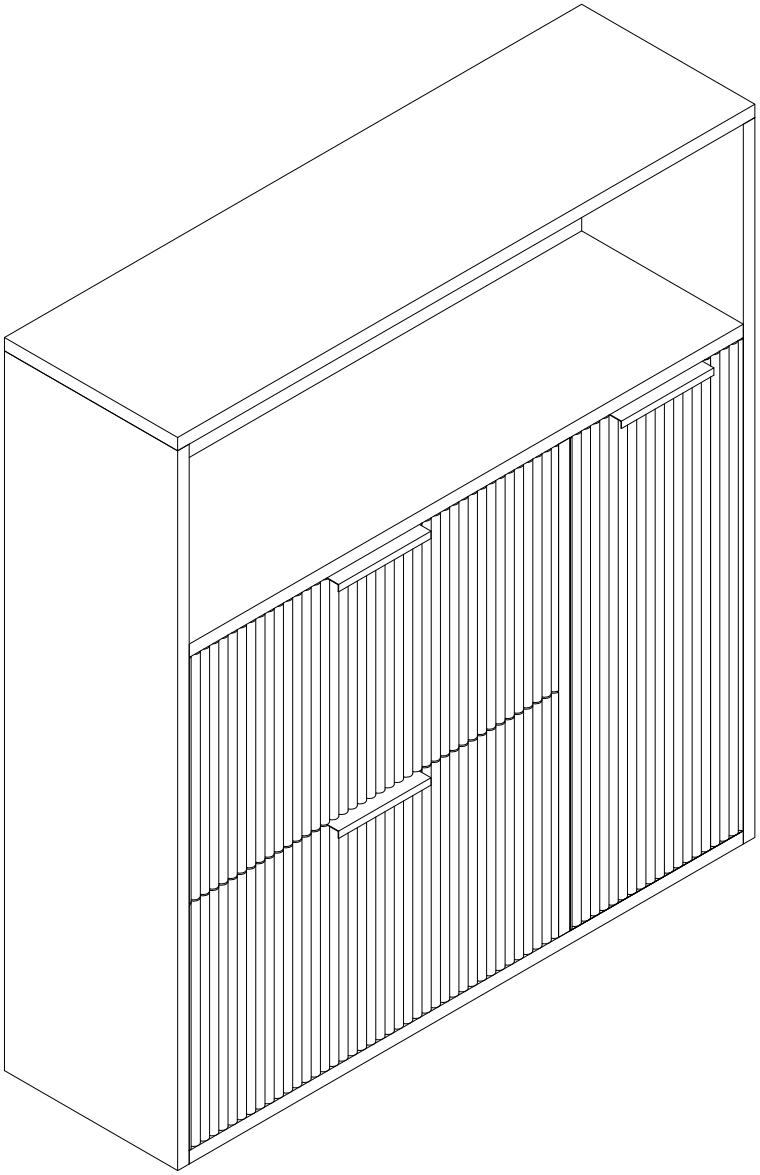

Model: SCT-KQ002

INTRODUCTION

Thank you for purchasing our products. Please read the instructions carefully before installation and keep it in a safe place for future reference. If you need any assistance or support, please feel free to contact our customer support team.

PRECAUTIONS

1. There are many components and accessories in the package. Each component and accessory is labeled with a letter or a number, check carefully before using any of them. Keep them away from children to prevent accidents.
2. Please install the product on a clean and soft underlay (such as carpet or cardboard) to avoid scratching or damaging the surface of the product.
3. The main components of the product is relatively heavy. Please pay attention to safety during installation.
4. The product is not stable during installation. Please do not move it randomly before it is completely installed.
5. If you have any questions during installation, please contact the customer service in time.

*PLEASE BE SURE TO FOLLOW THE INSTALLATION STEPS IN C10THE MANUAL TO AVOID UNNECESSARY LOSSES CAUSED BY IMPROPER INSTALLATION.
*IF YOU NEED FURTHER ASSISTANCE, PLEASE CONTACT THE CUSTOMER SERVICE ONLINE.

Exploded View

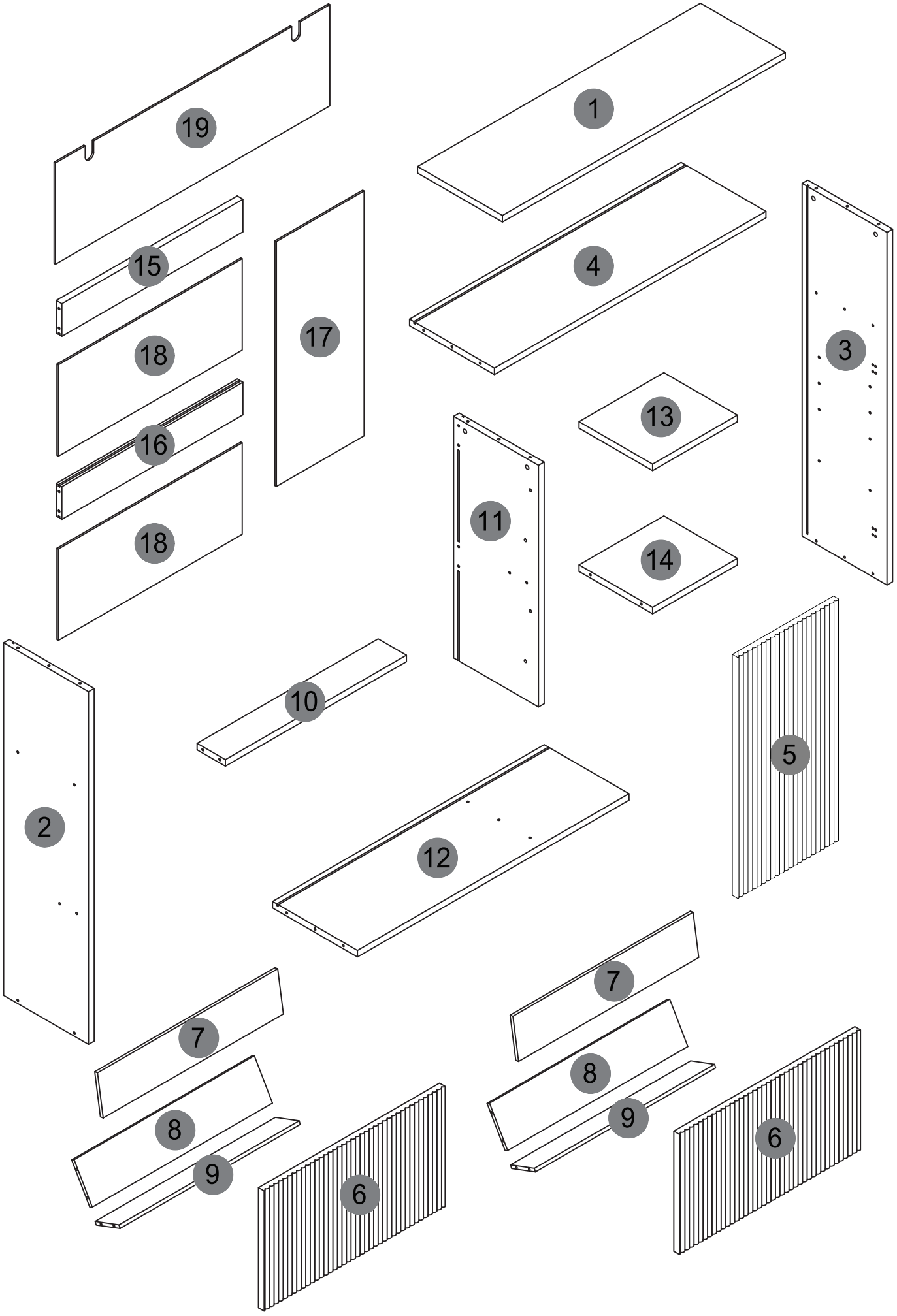

Hardware Provided

A 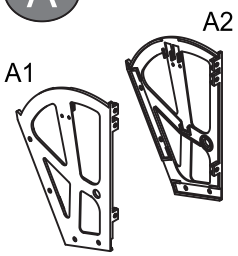 X2	B 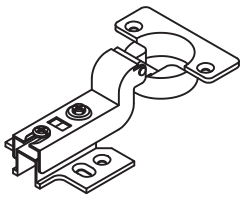 X2	C 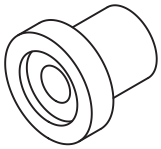 X4	D 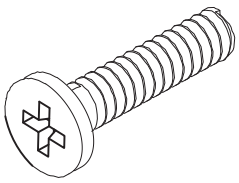 Ø6 x 16 mm X4	E 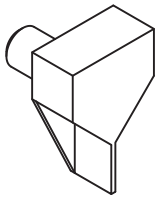 X4
F 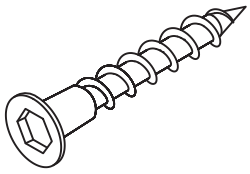 Ø5 x 35 mm X14	G 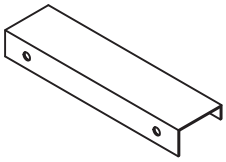 X3	H 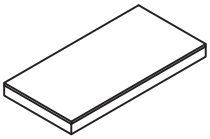 X6	I 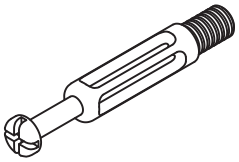 X18	J 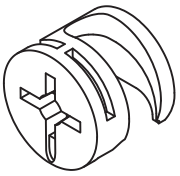 Ø12 x 9.5 mm X18
K 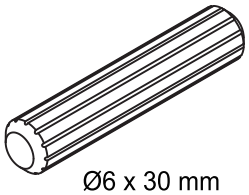 Ø6 x 30 mm X8	L 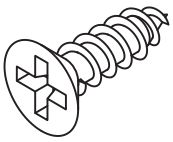 Ø3 x 12 mm X10	M 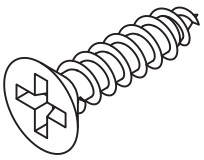 Ø3.5 x 16 mm X28	N 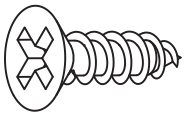 Ø3.5 x 12 mm X18	O 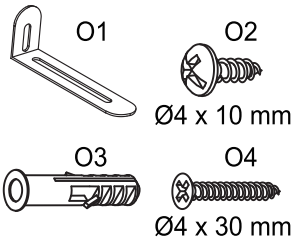 X2
P 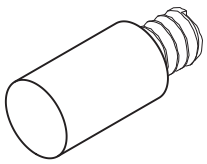 X4	Q 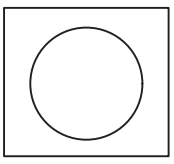 X10	R 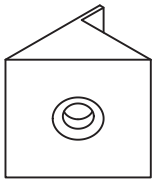 X10	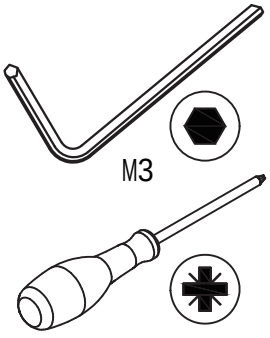 	

Parts Identification

1

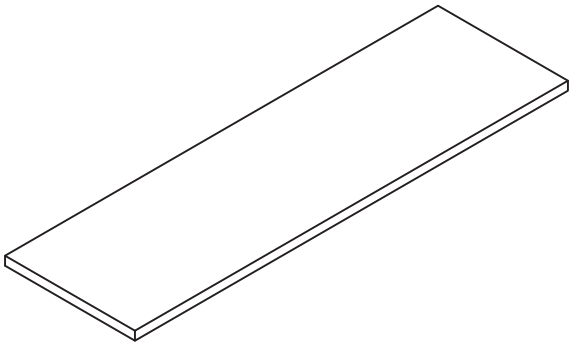

2

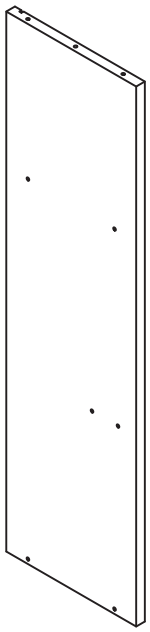

3

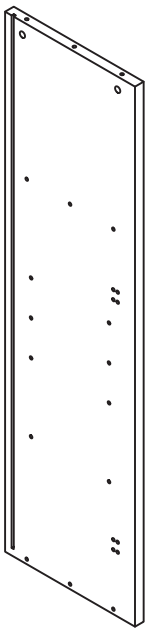

4

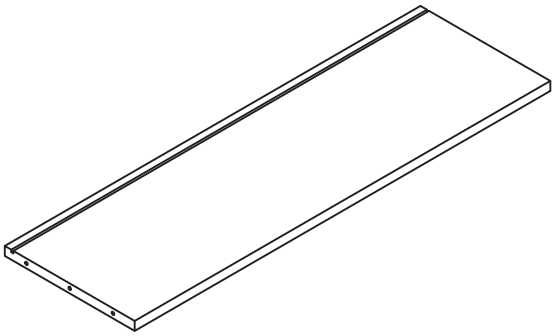

5

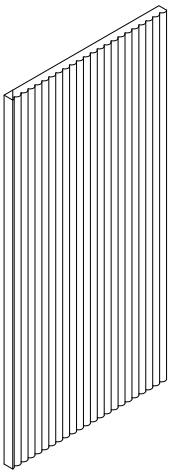

6

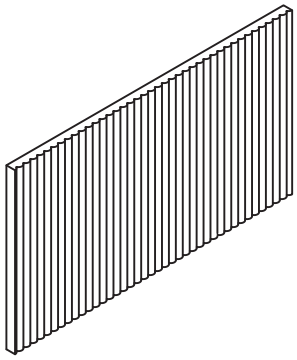

X2

Parts Identification

7

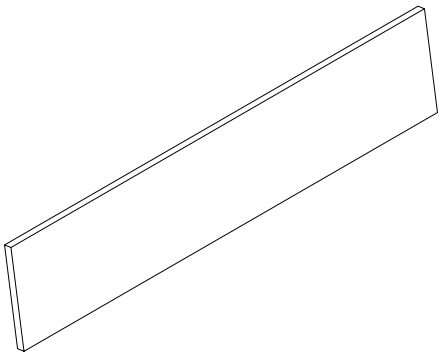

X2

8

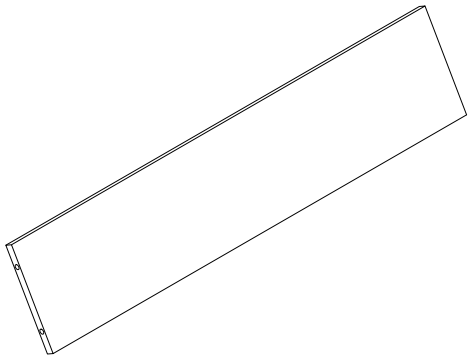

X2

9

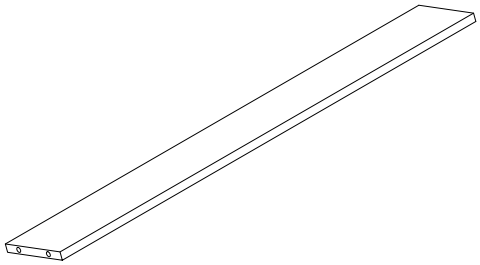

X2

10

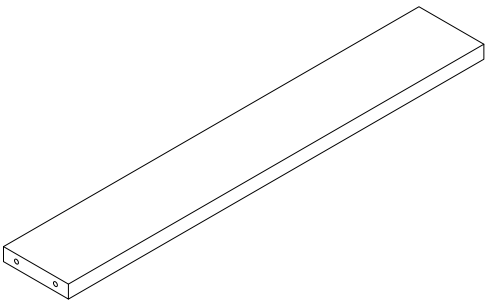

11

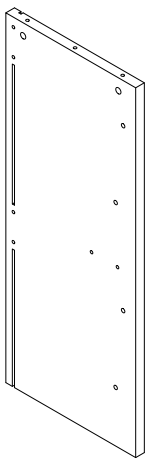

12

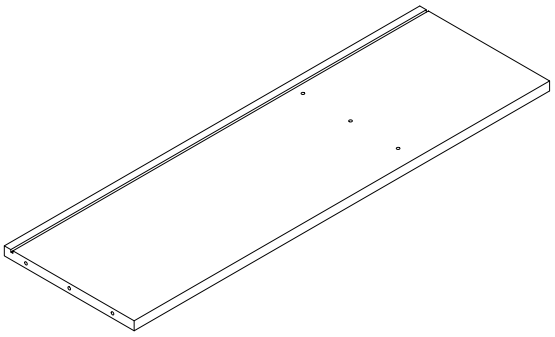

Parts Identification

13

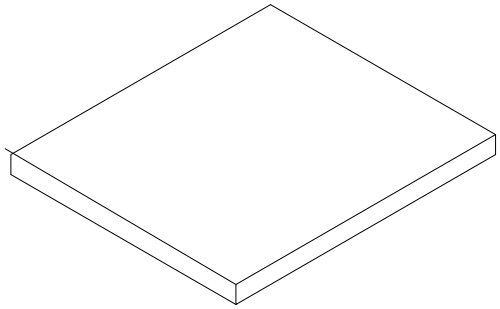

14

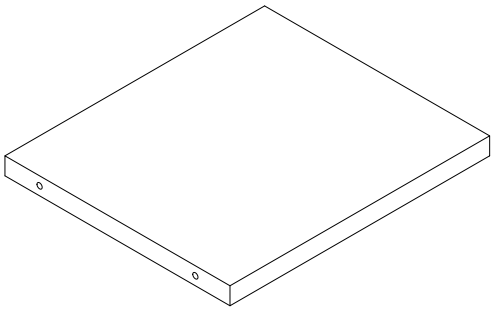

15

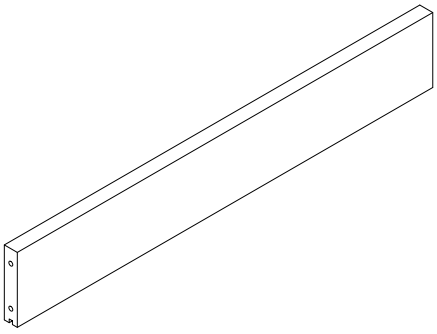

16

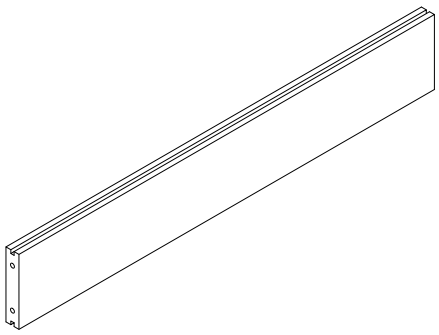

17

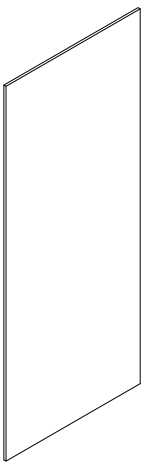

18

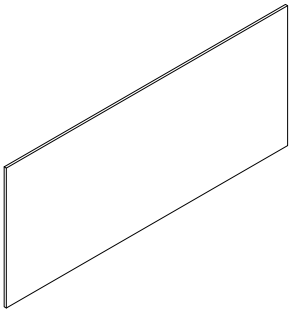

X2

Parts Identification

19

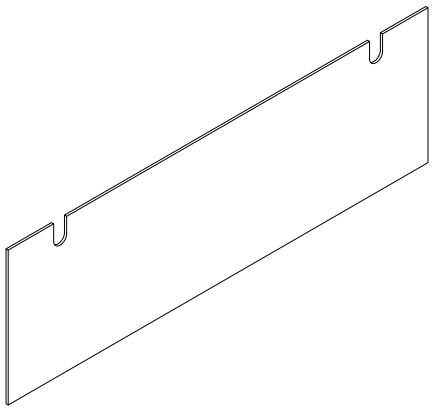

MADE IN CHINA

Installation of Cams and Pins

Screw the pin into the hole. To set the cams correctly, ensure that the arrow on the cam is opening to the hole of the pin it is locking. Lock the cam by turning the cam head with a screwdriver until it is tightened. Please do not use an electric screwdriver to assemble the unit.

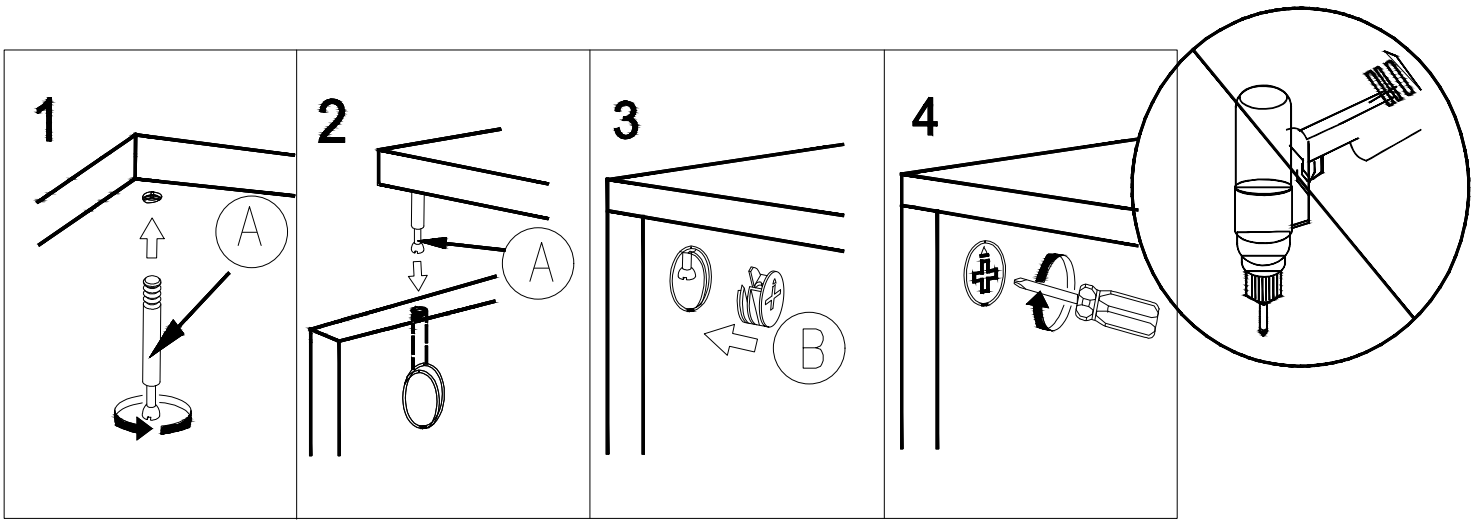

Read each step carefully before starting. It is very important that each step of instruction is performed in the correct order. If these steps are not followed in sequence, assembly difficulties will occur.

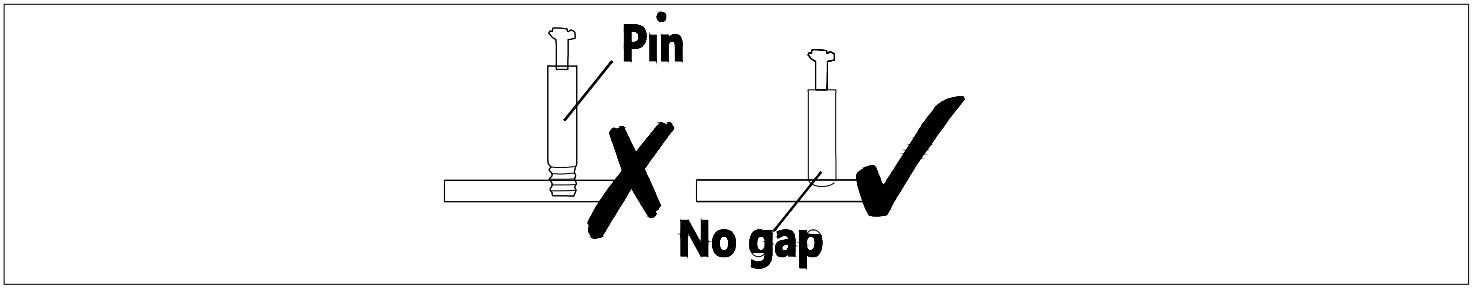



This furniture requires 2 people to assemble.
Make sure no parts missing or damaged before assembly.

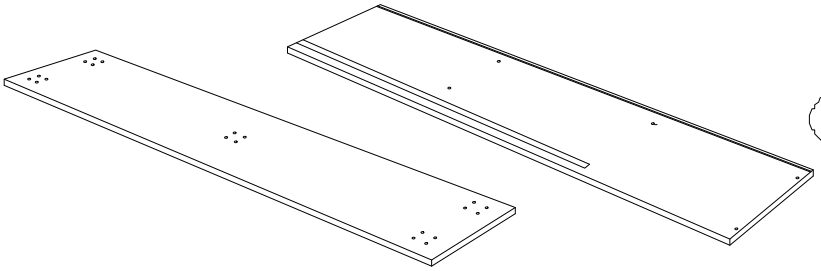



1

I x 8	K x 2	
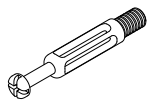	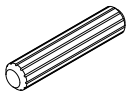	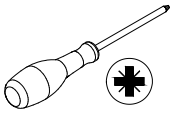

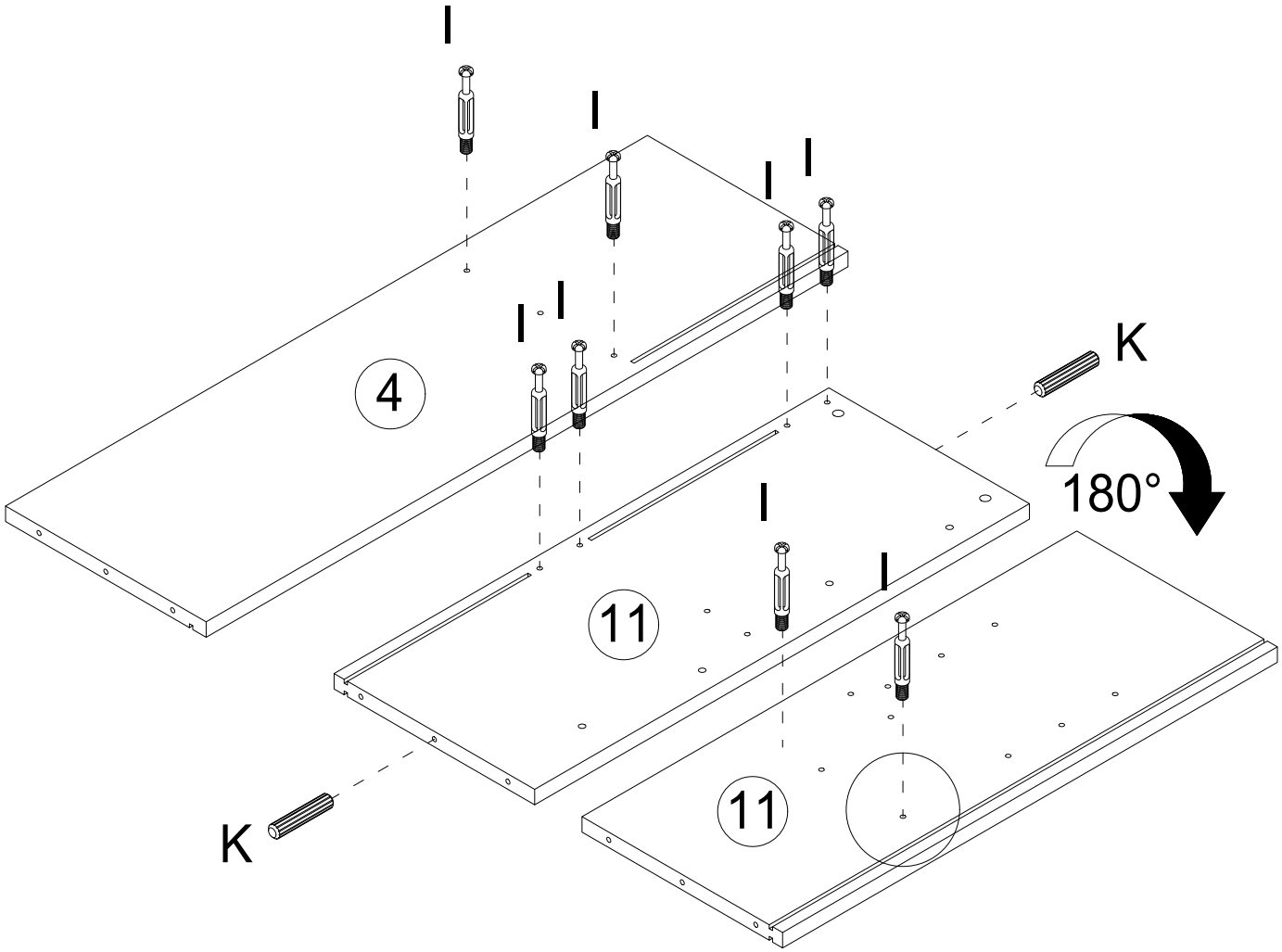

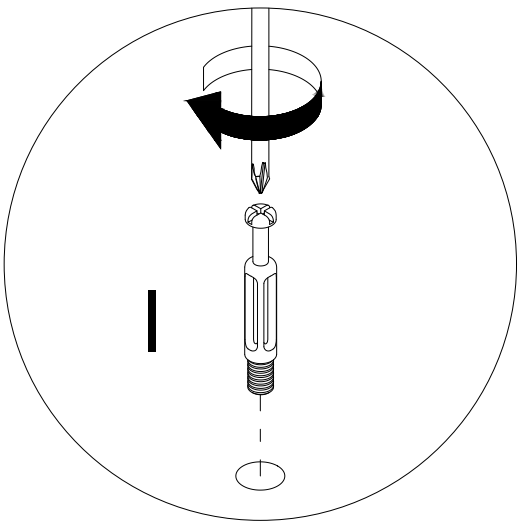

2

J x 2



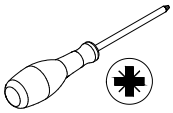

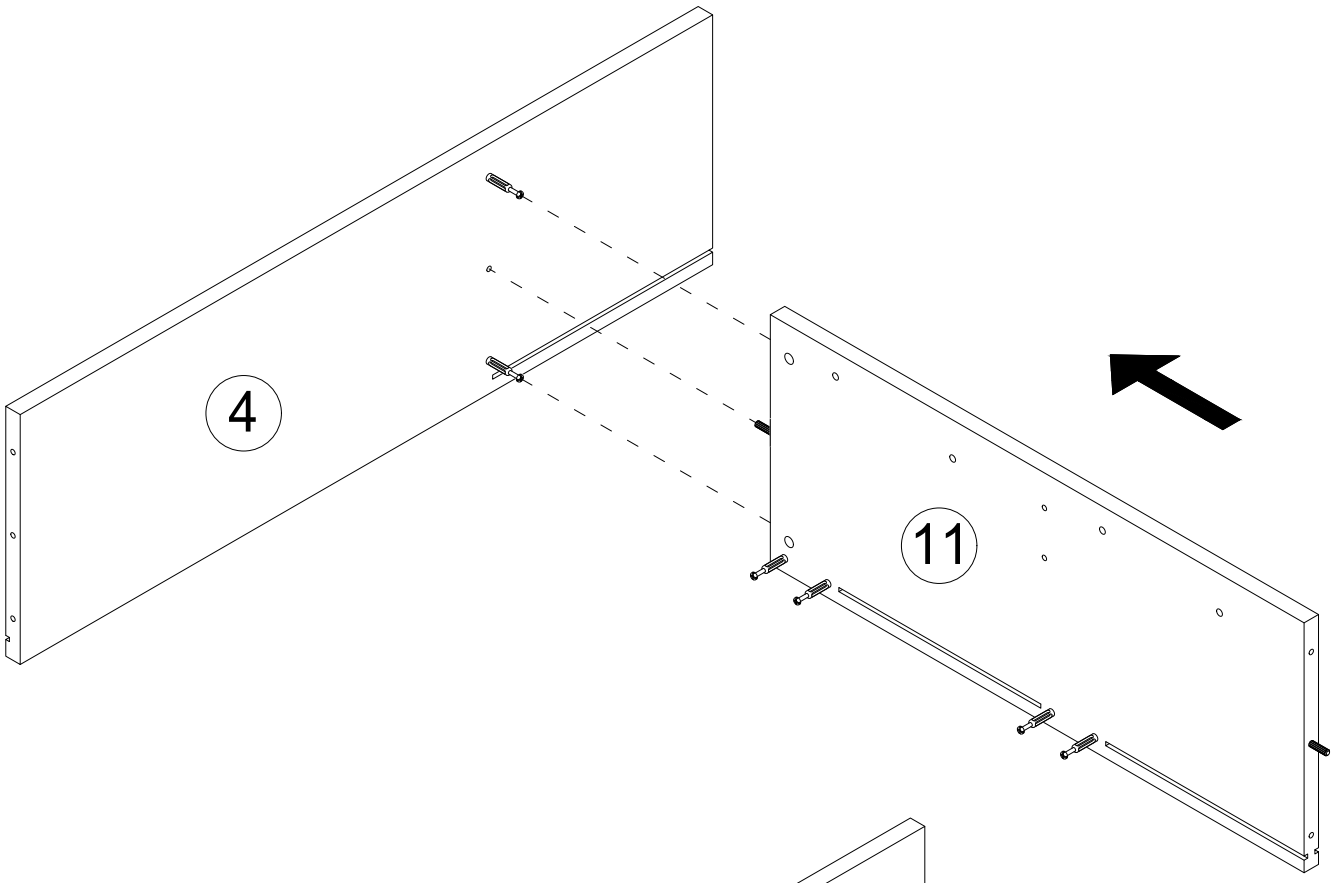

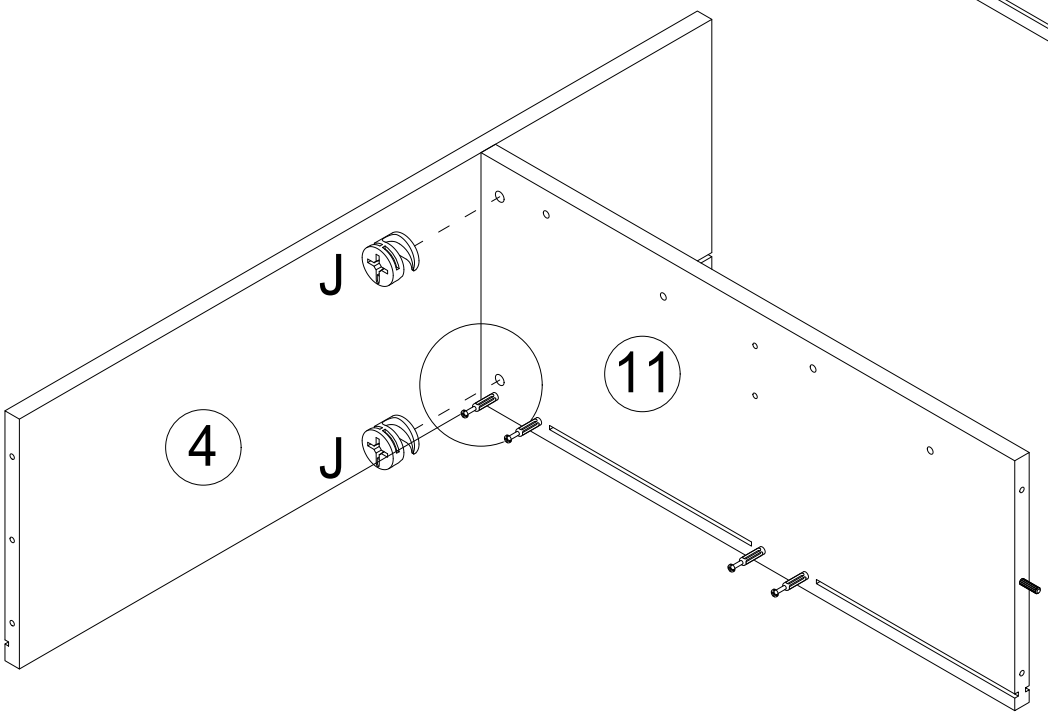

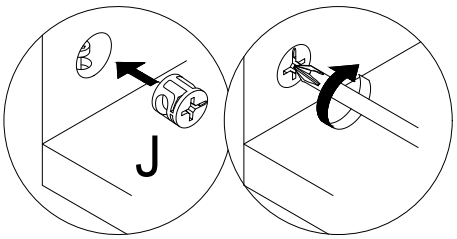

MADE IN CHINA

3

J x 2



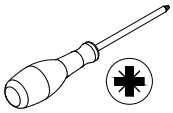

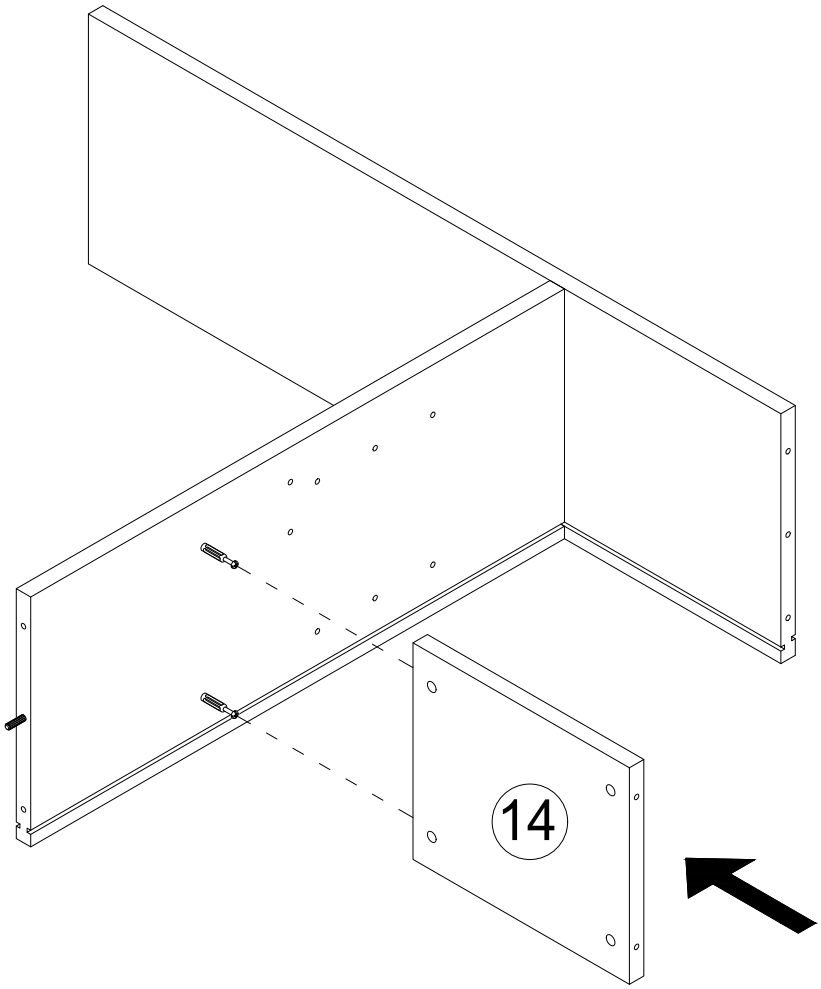

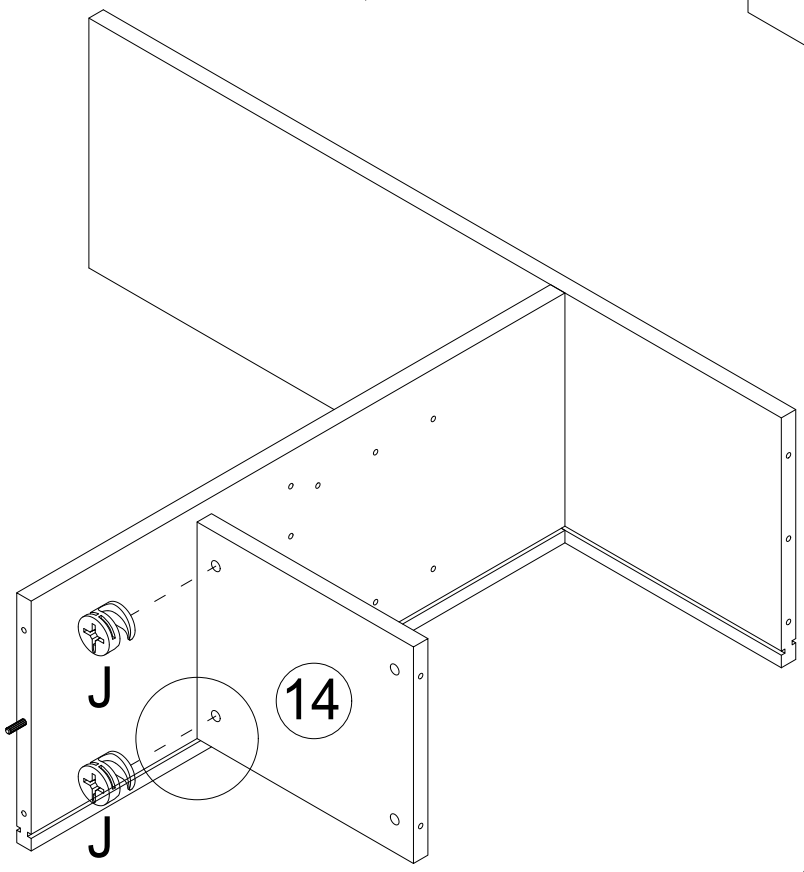

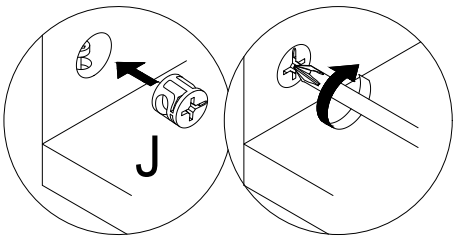

MADE IN CHINA

4

F x 2

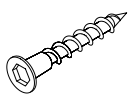

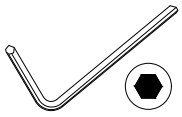

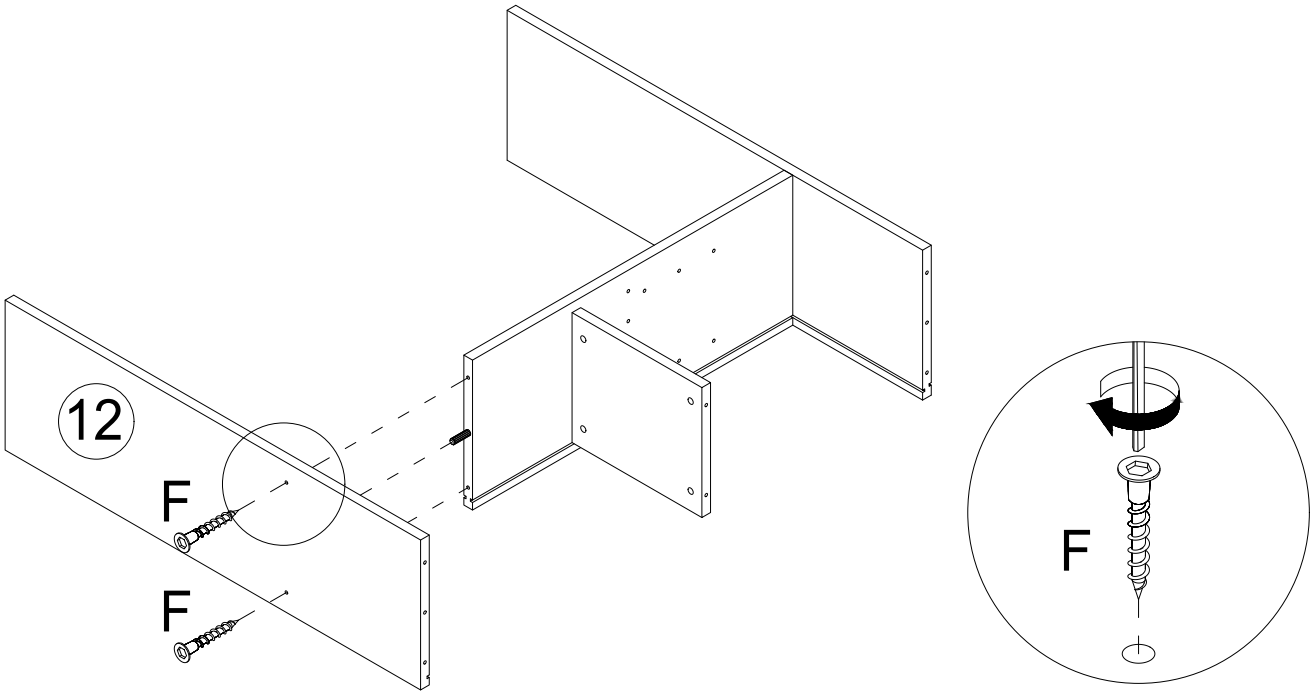

5

J x 4



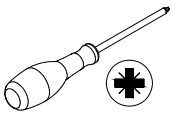

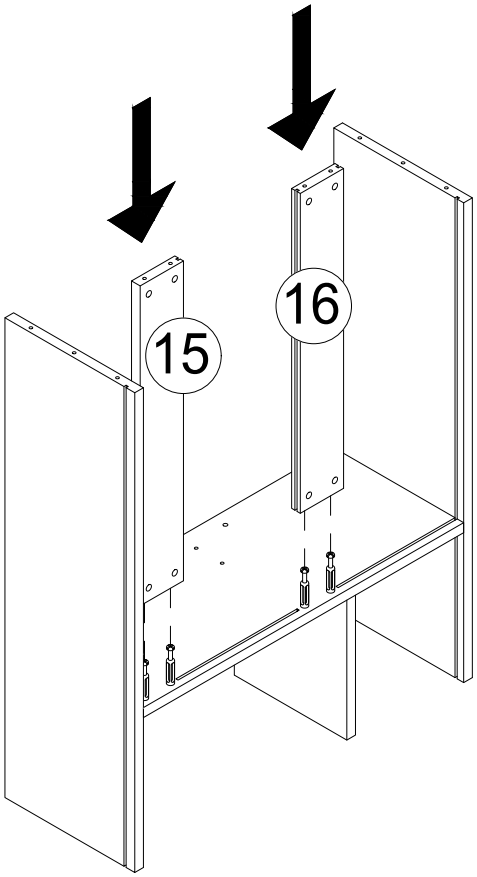

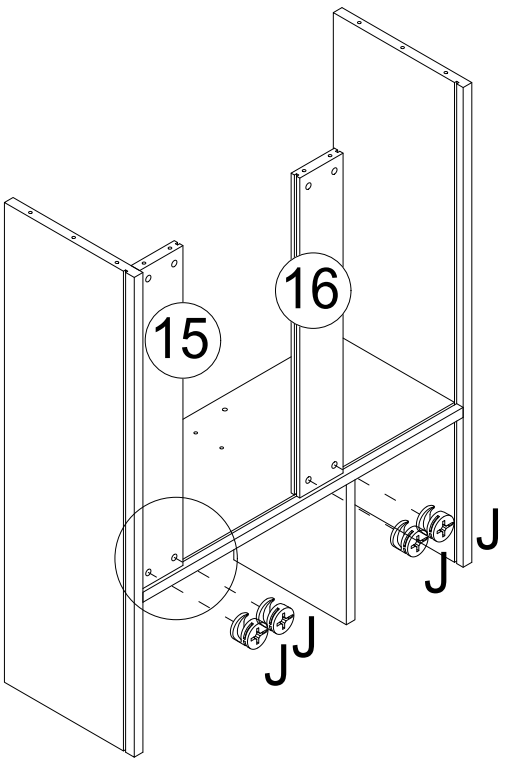

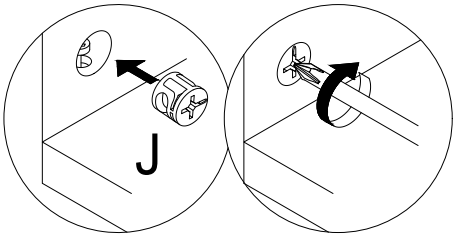

6

F x 2

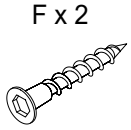

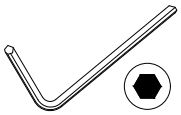

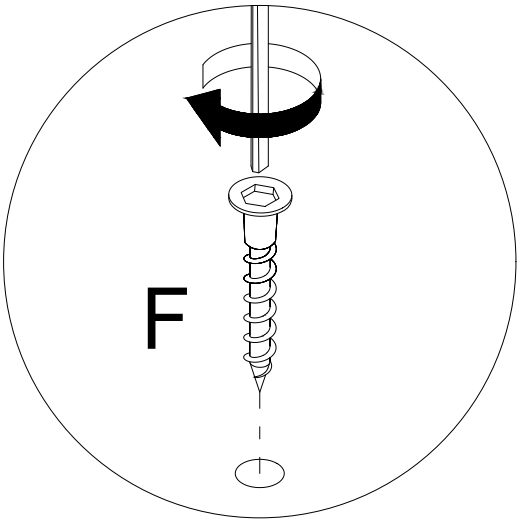

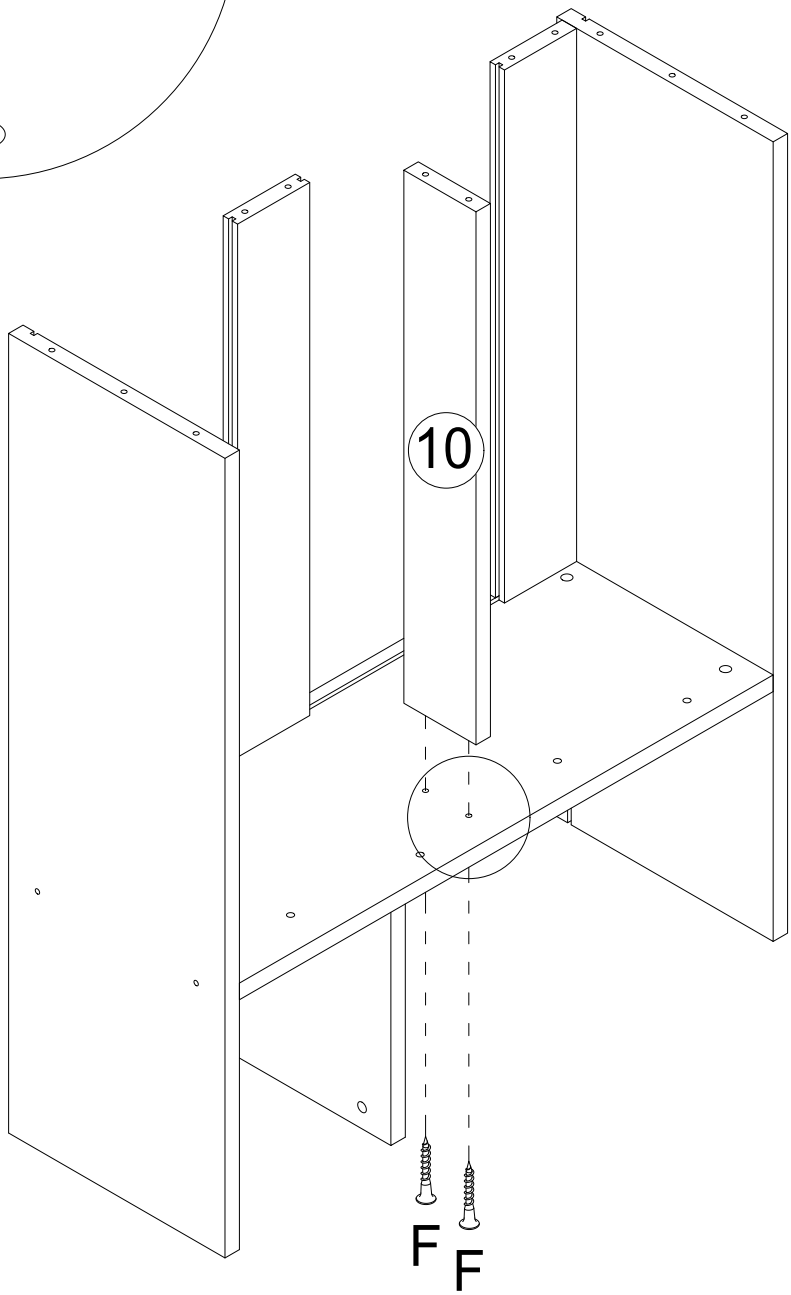

MADE IN CHINA

7

K x 2

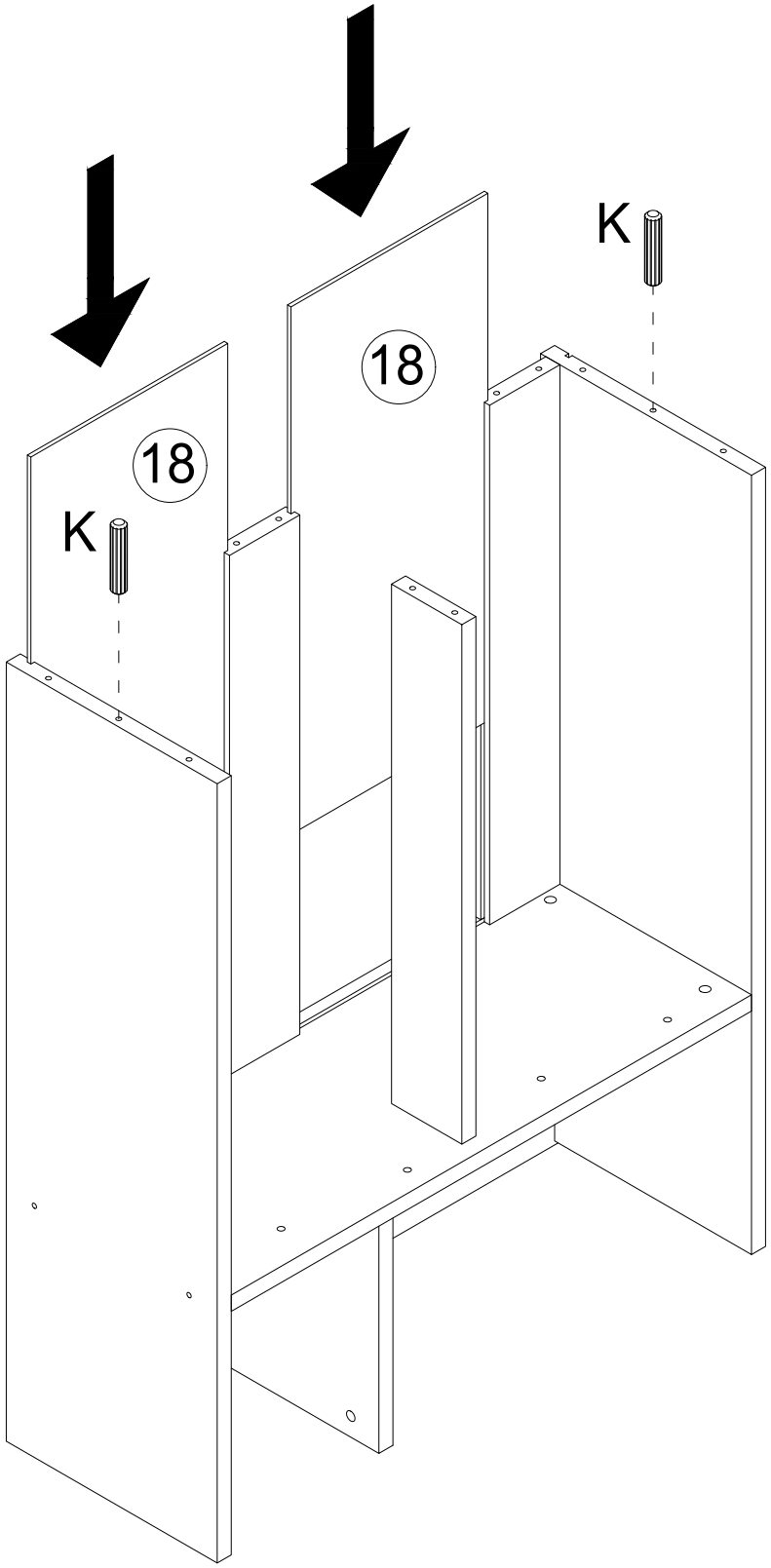

8

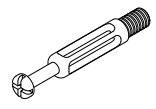

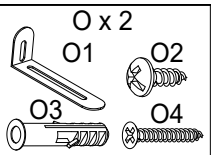

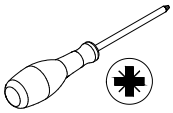

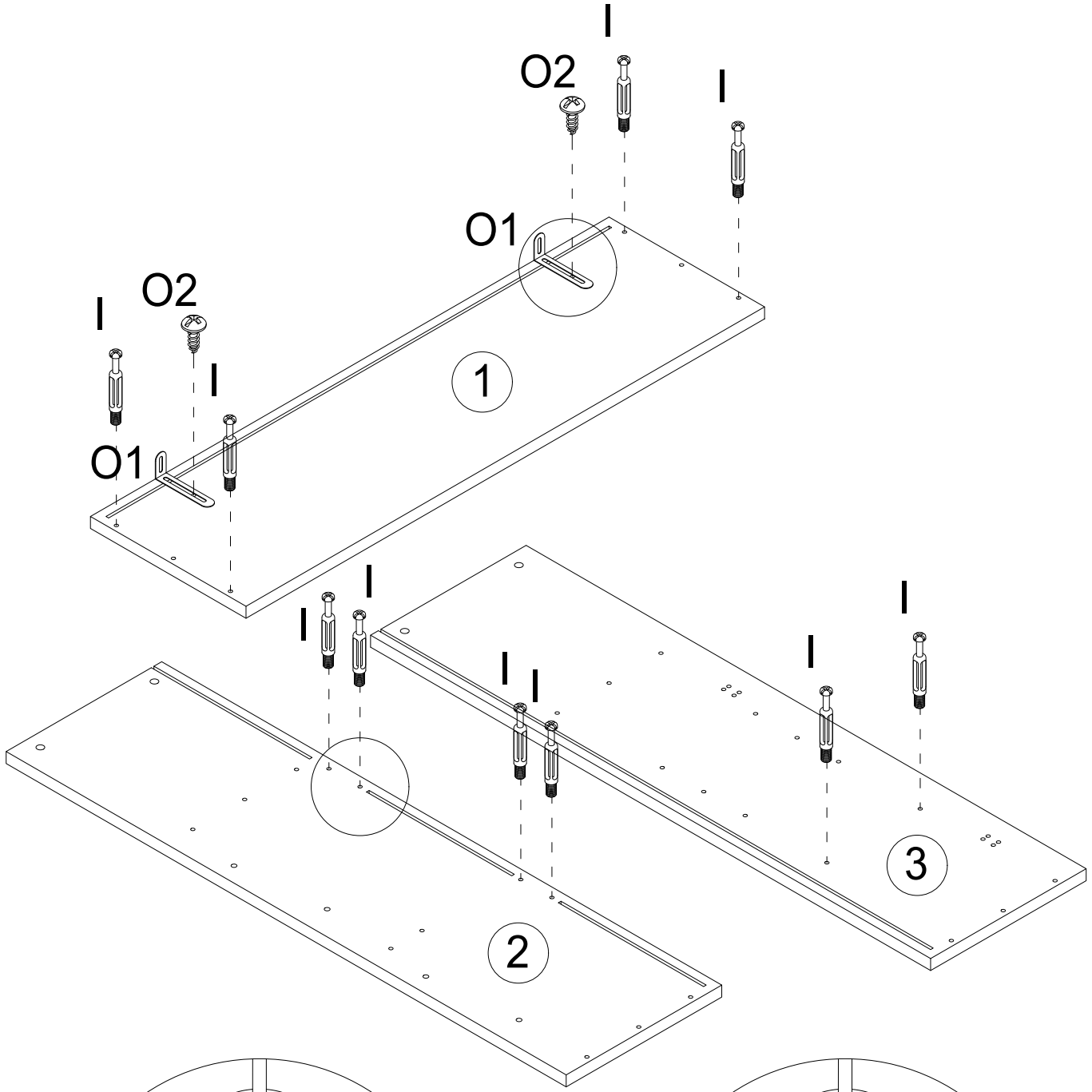

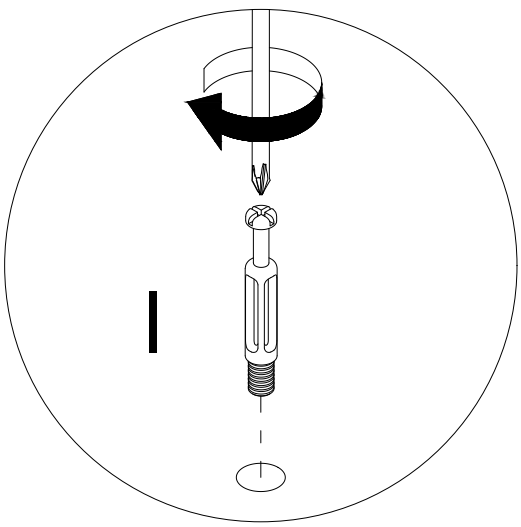

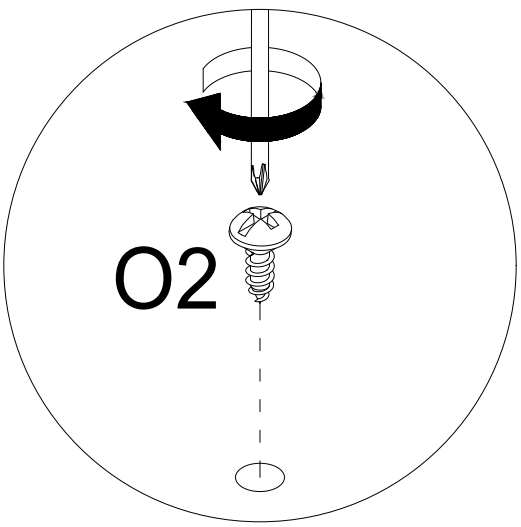

9

F x 6

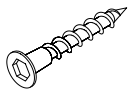

J x 4



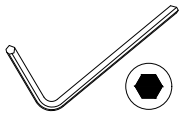

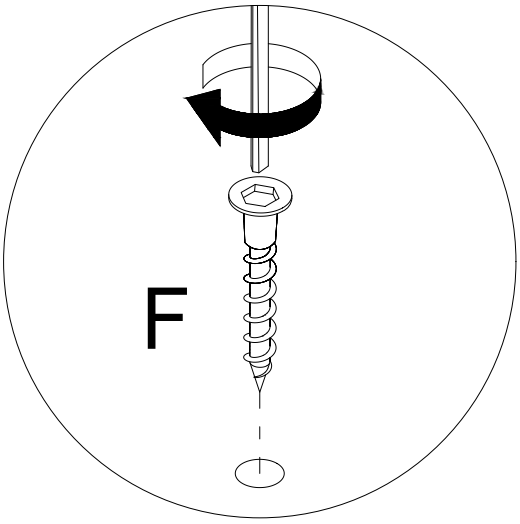

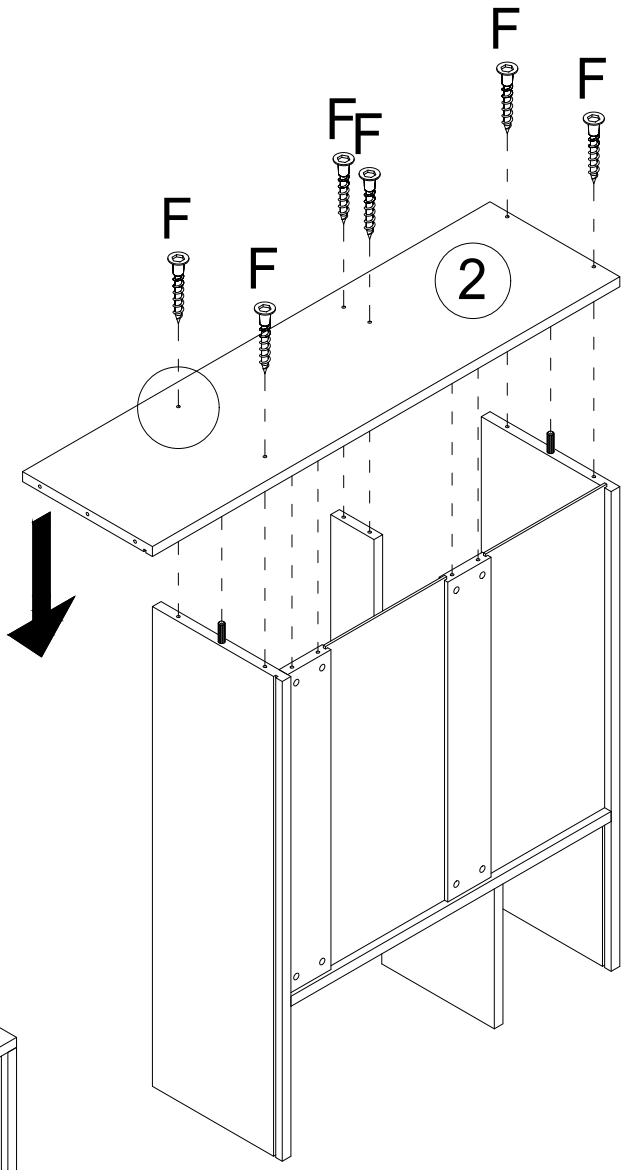

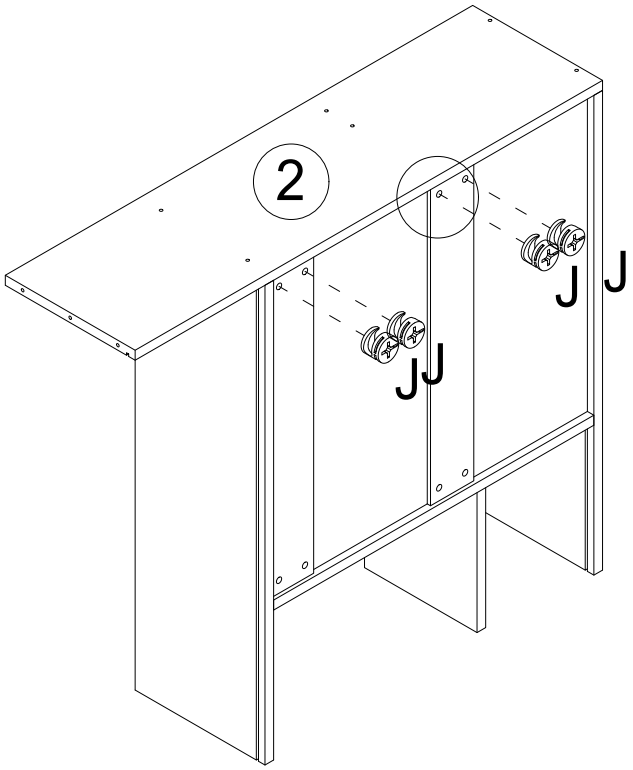

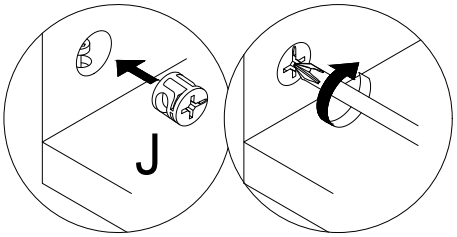

10

K x 2

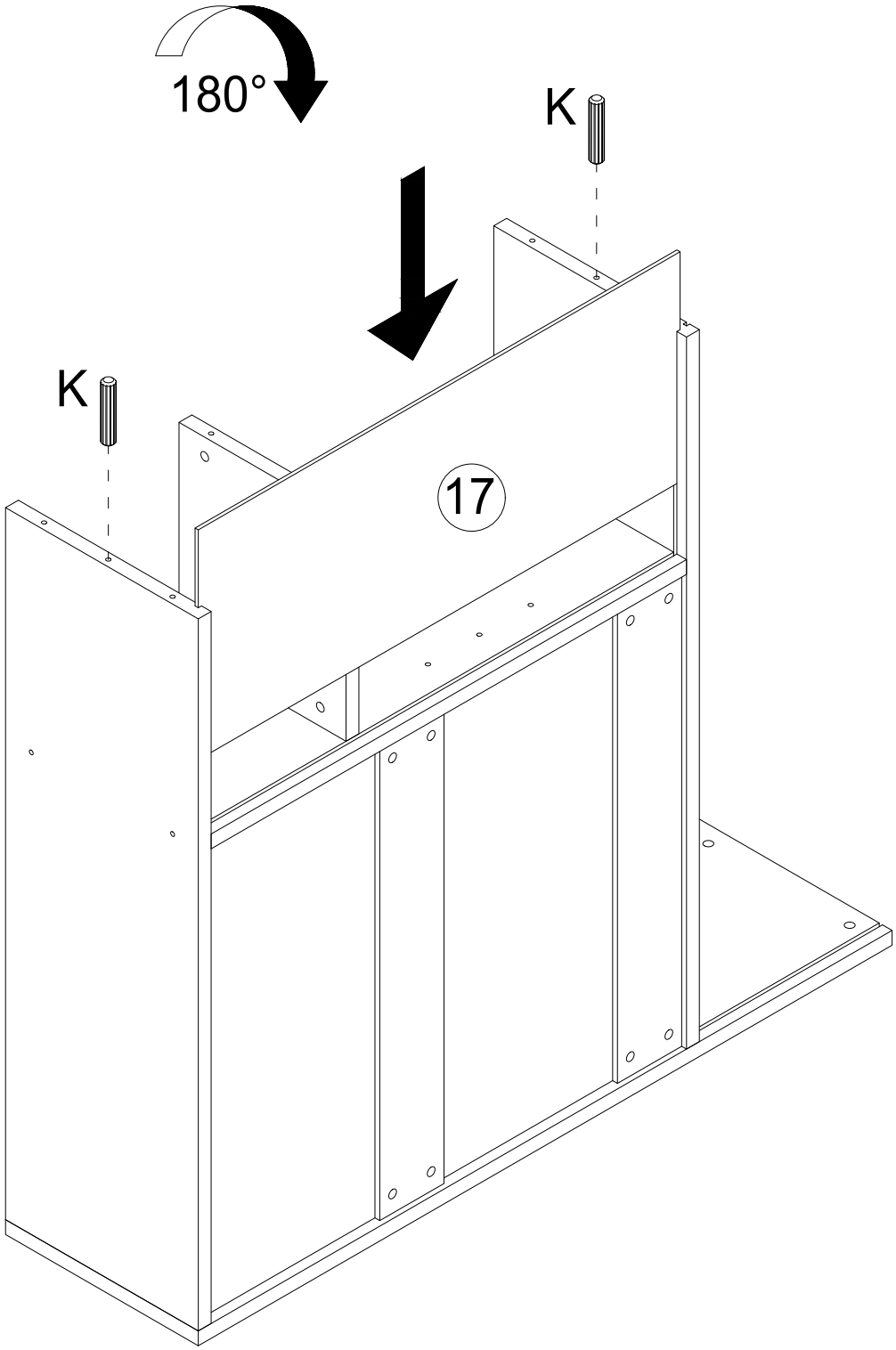

11

F x 4

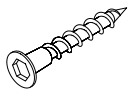

J x 2



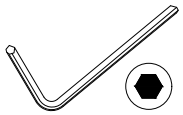

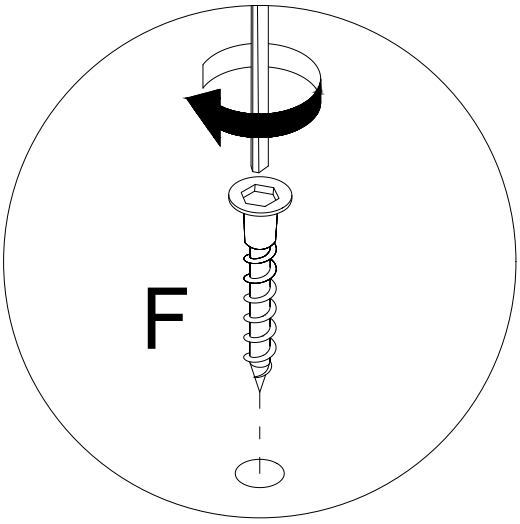

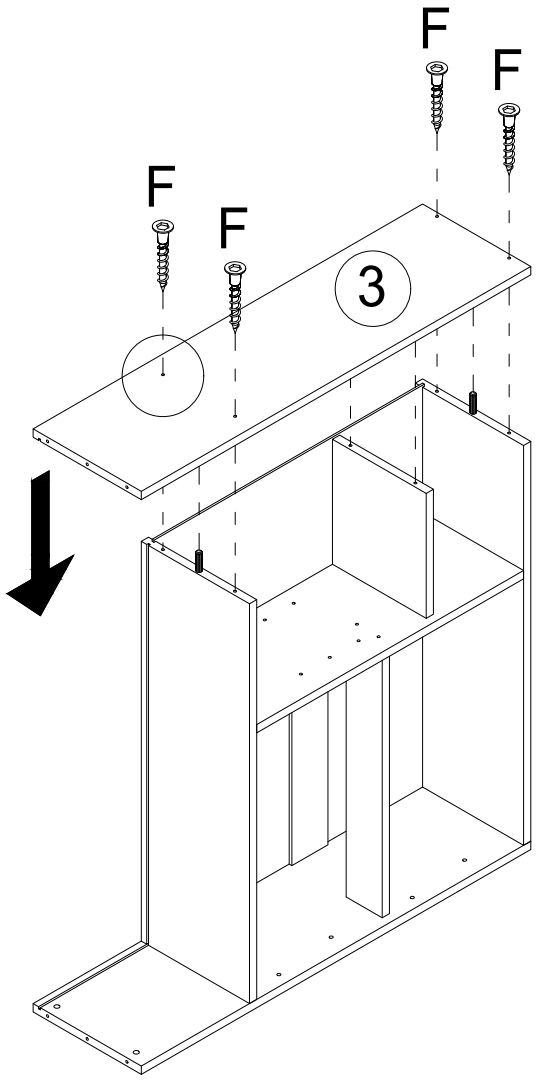

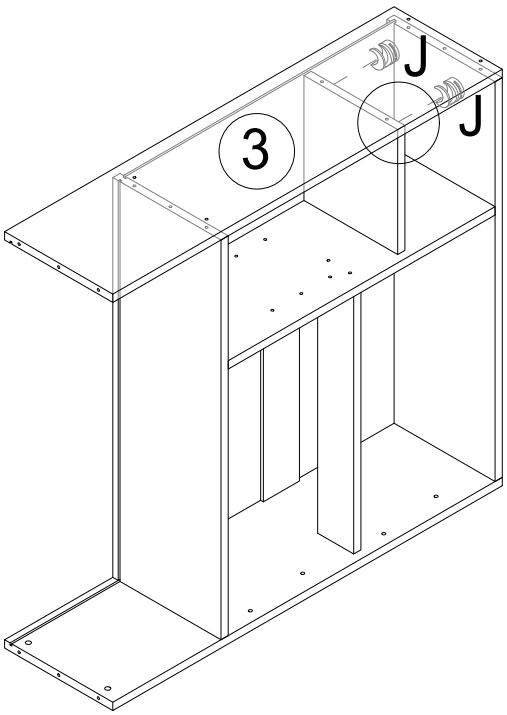

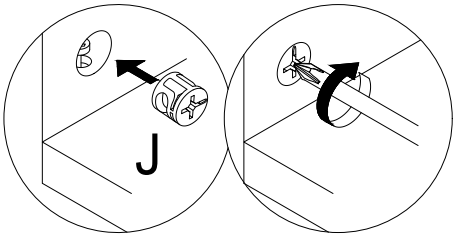

MADE IN CHINA

12

K x 2

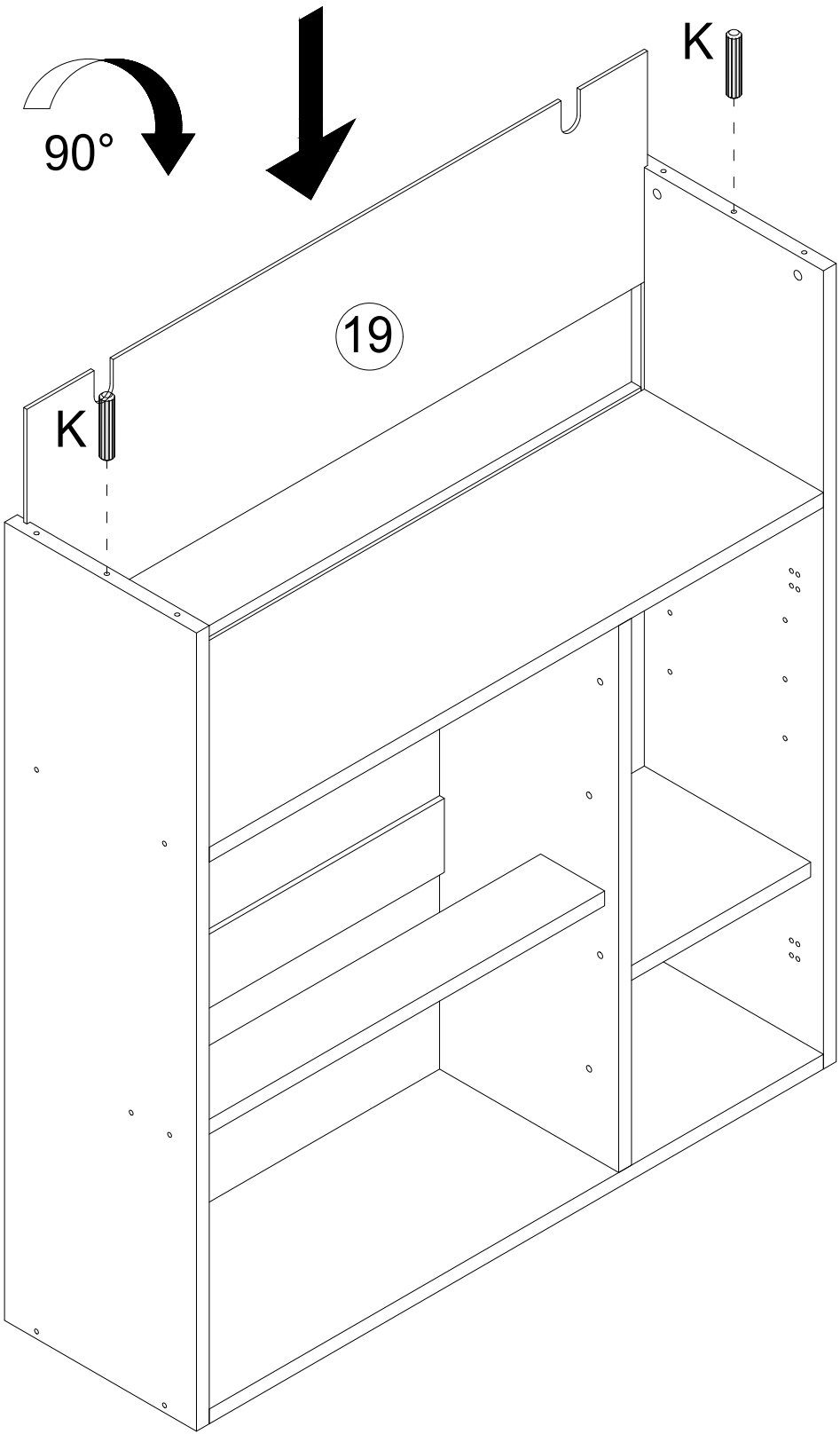

13

J x 4



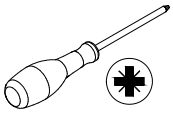

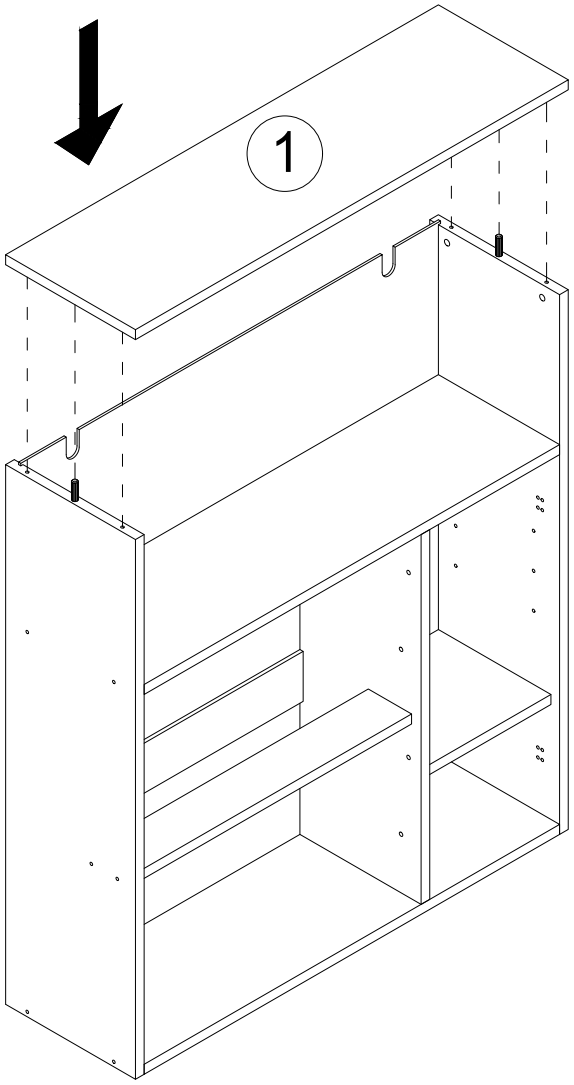

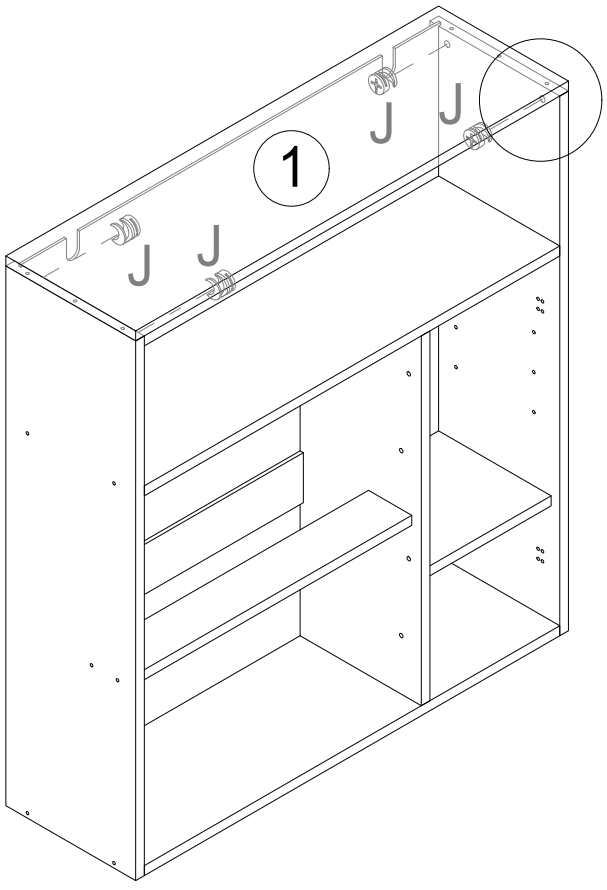

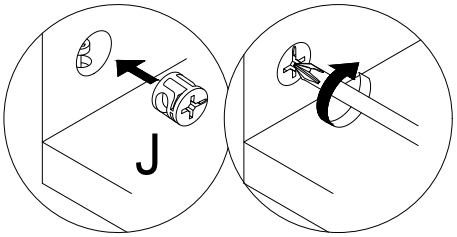

14

A x 2

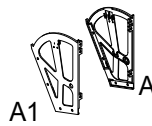

M x 12

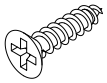

Ø3.5 x 16 mm

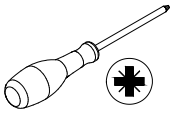

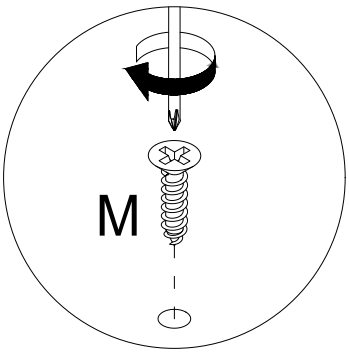

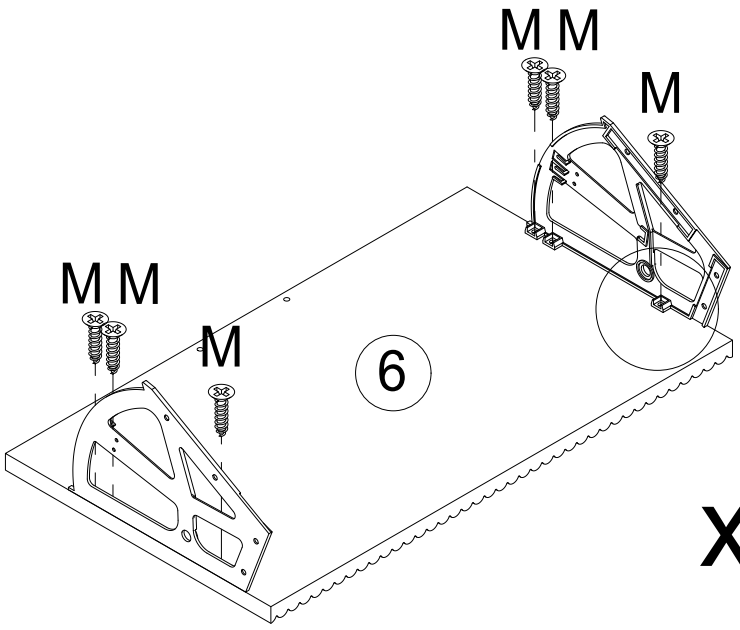

x 2

Please repeat this step twice.

15

M x 16

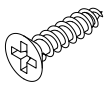

Ø3.5 x 16 mm

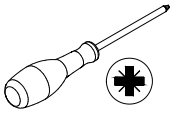

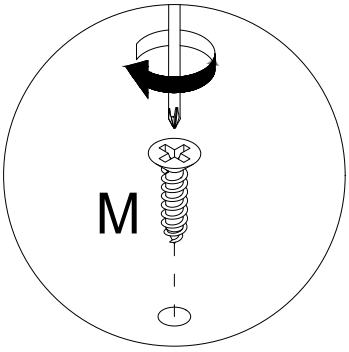

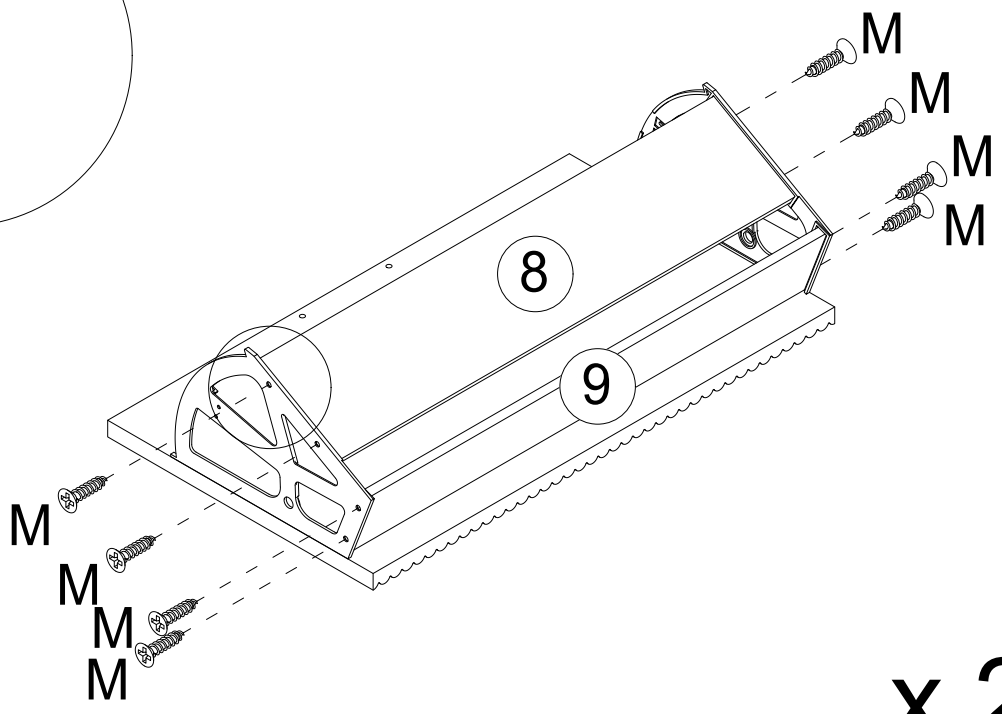

x 2

Please repeat this step twice.

16

G x 2	N x 4	
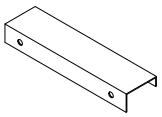	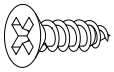 Ø3.5 x 12 mm	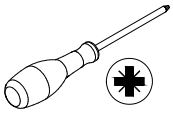

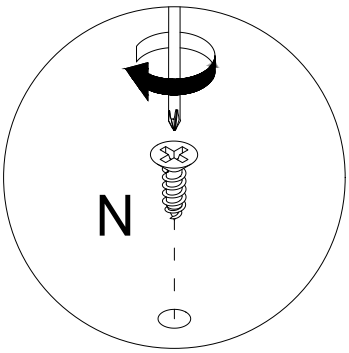

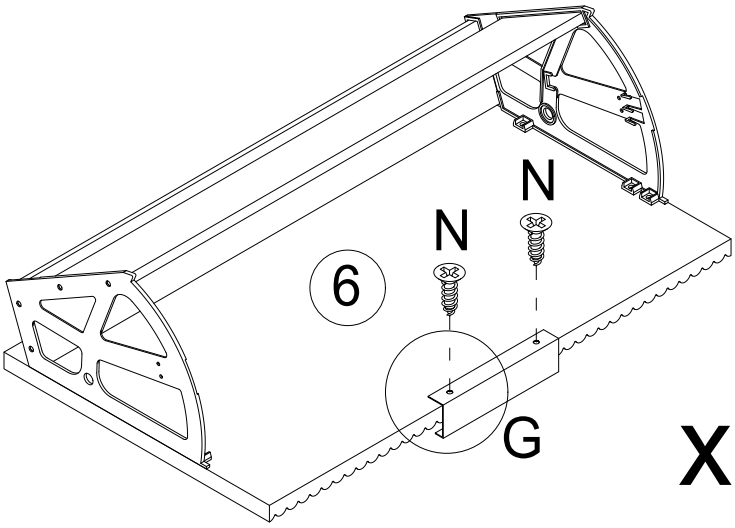

x 2

Please repeat this step twice.

17

P x 4	
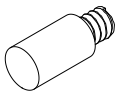	

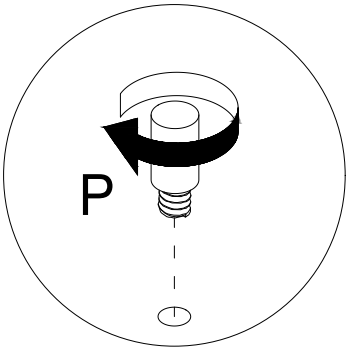

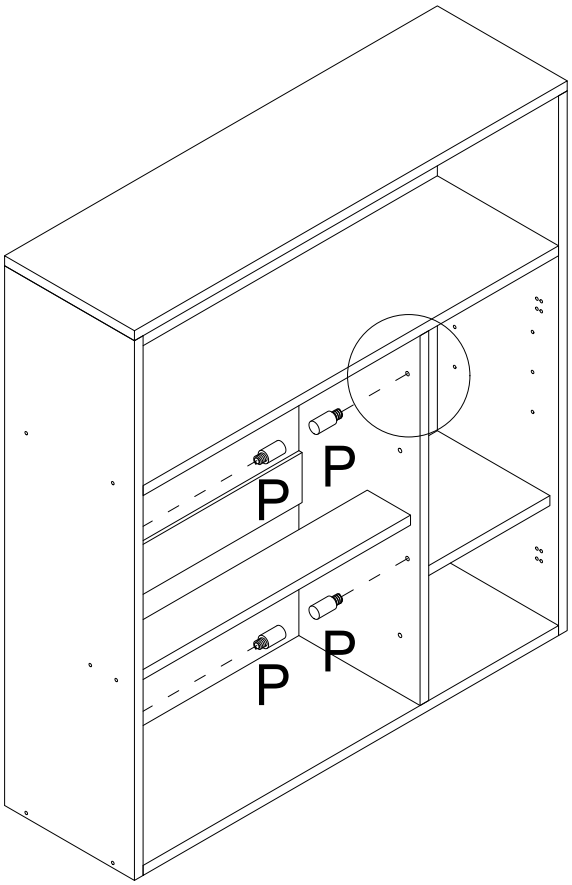

18

C x 4



D x 4

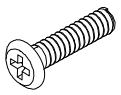

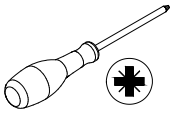

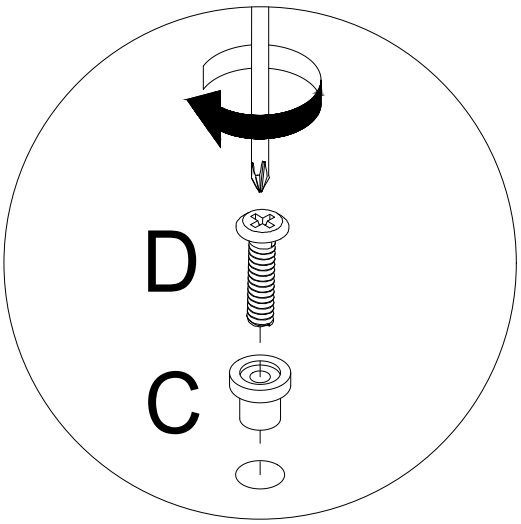

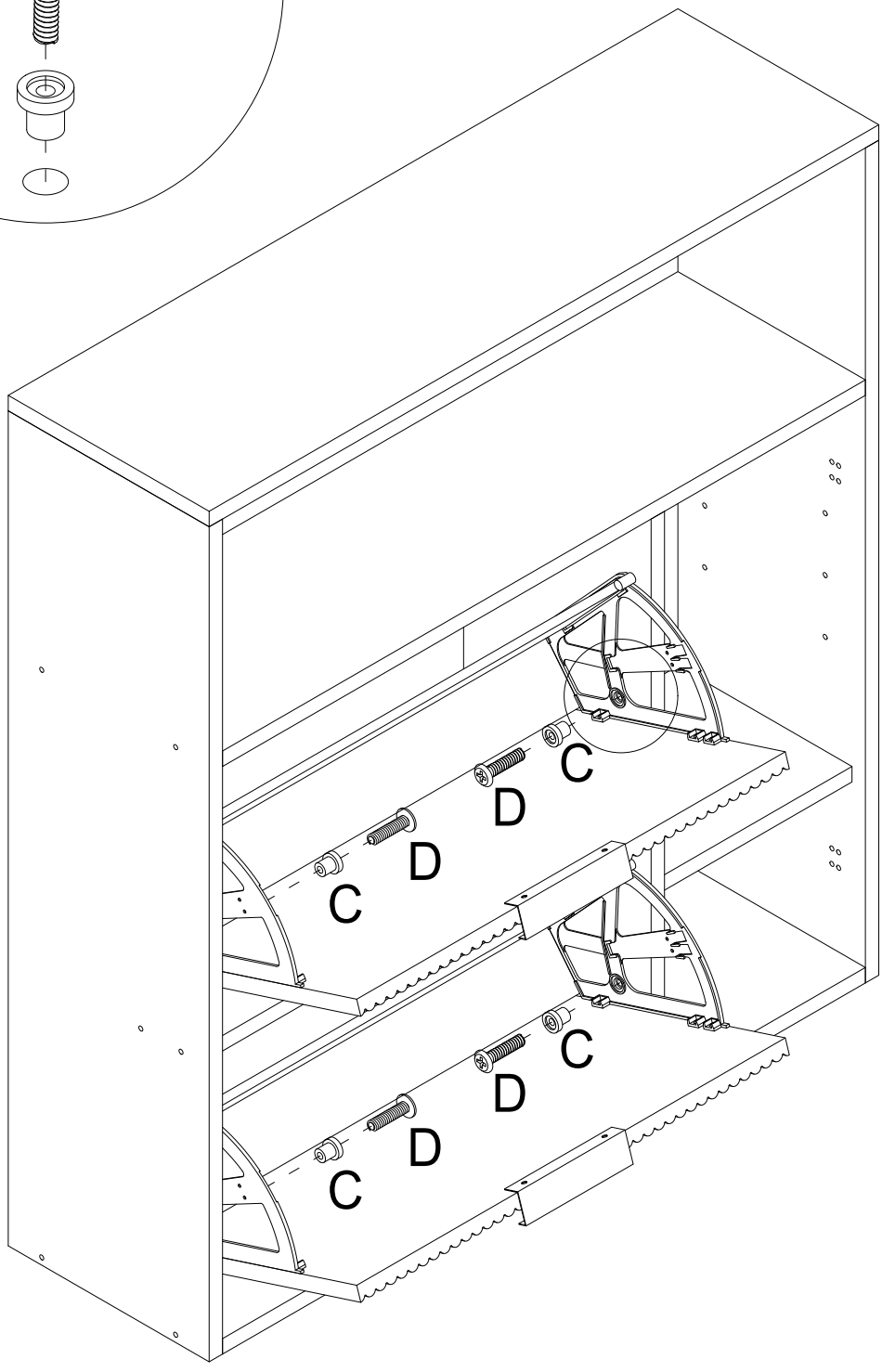

19

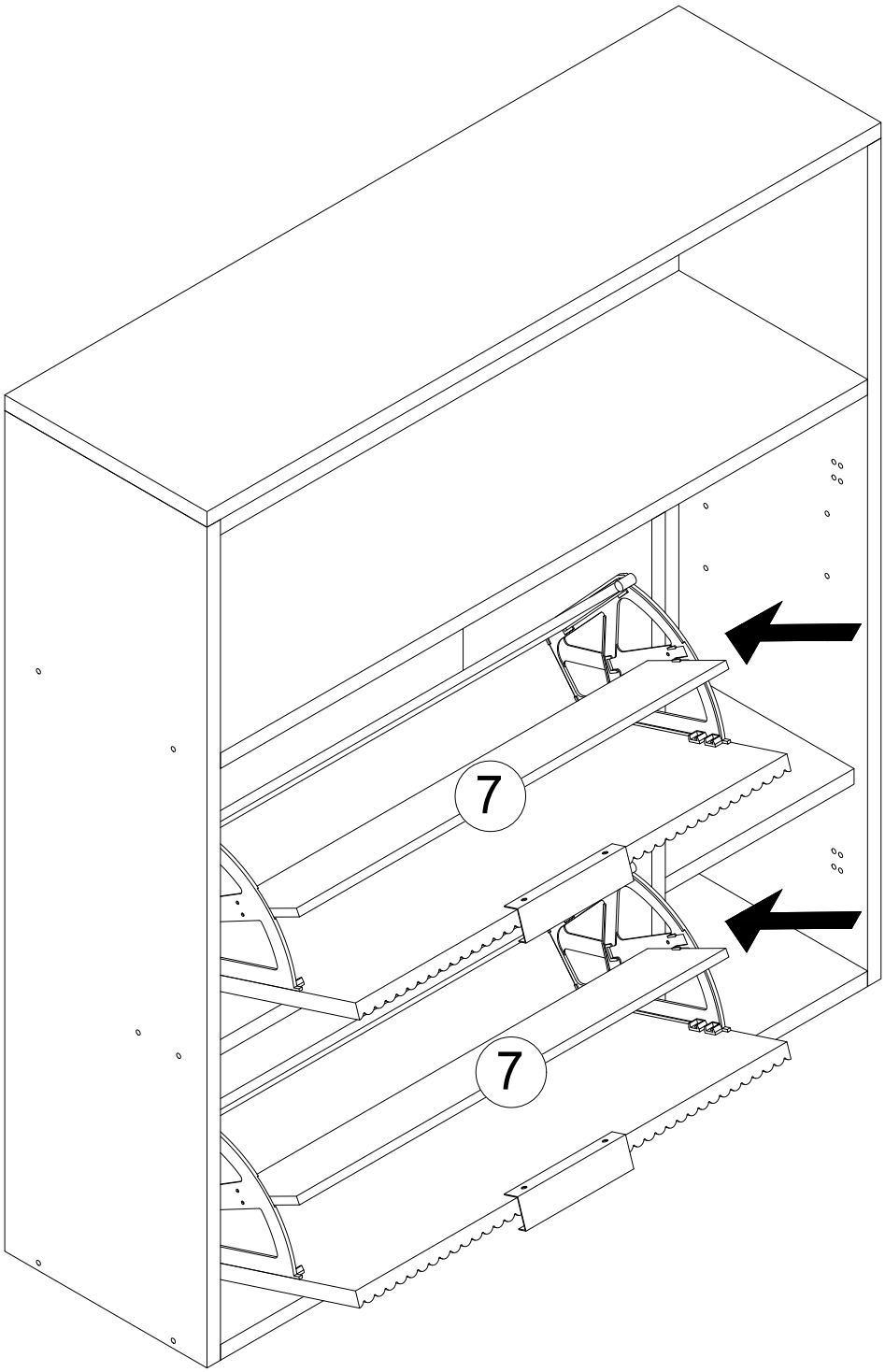

20

B x 2	G x 1	N x 6	
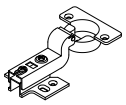	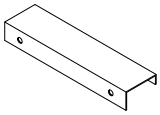	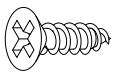 Ø3.5 x 12 mm	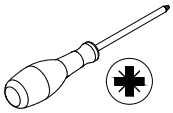

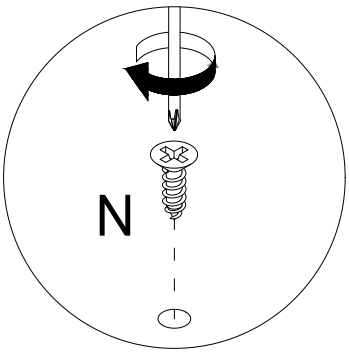

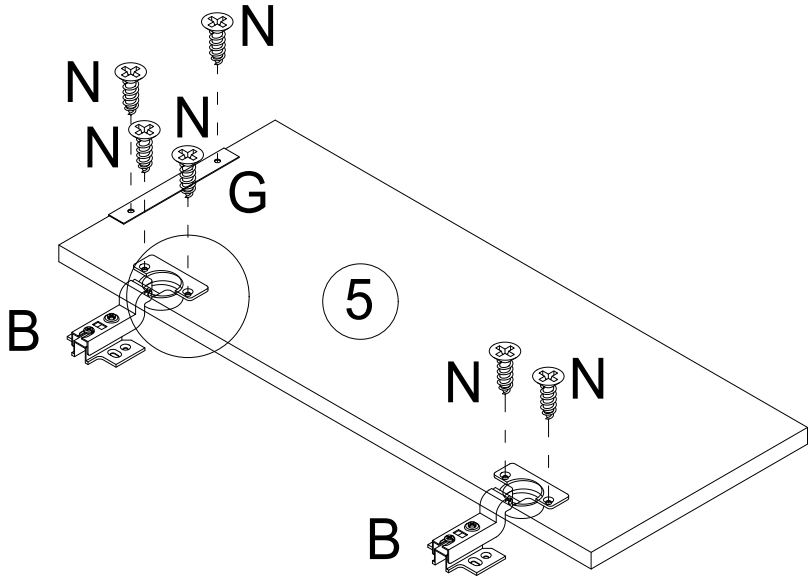

21

N x 8	
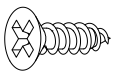 Ø3.5 x 12 mm	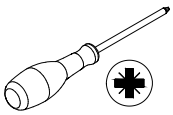

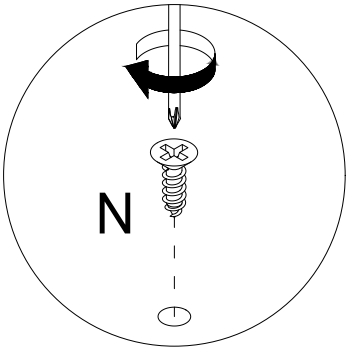

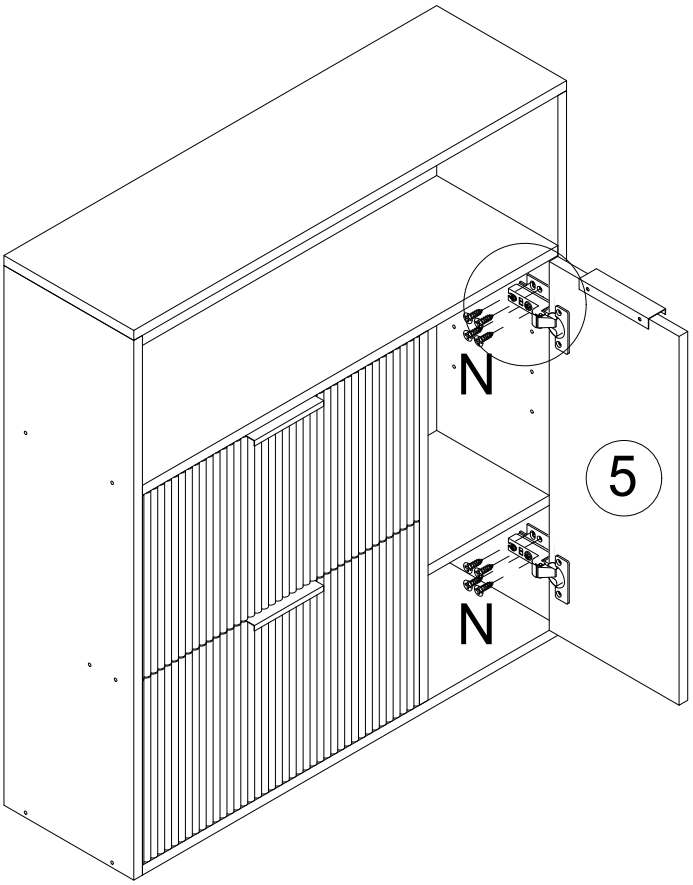

22

E x 4

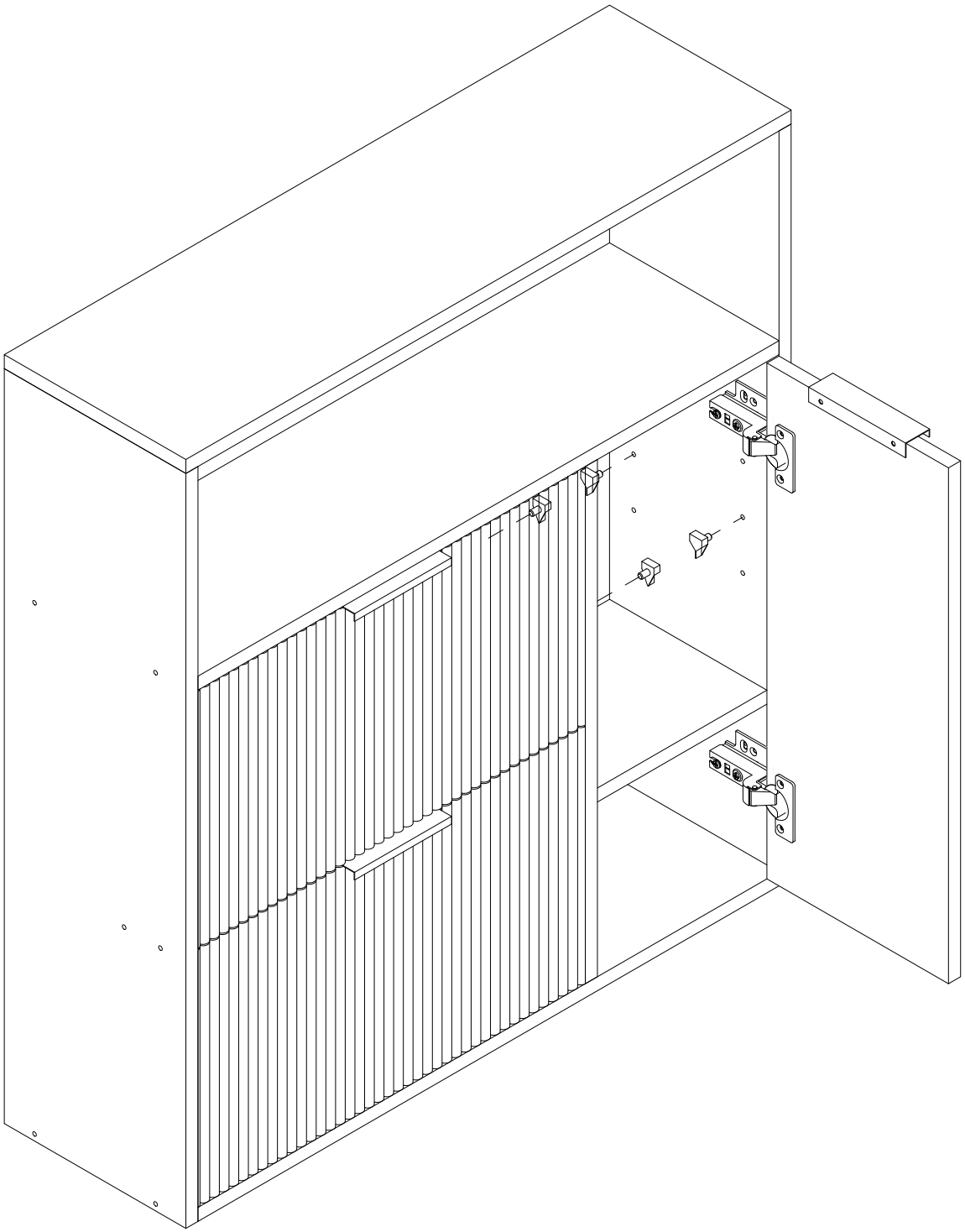

23

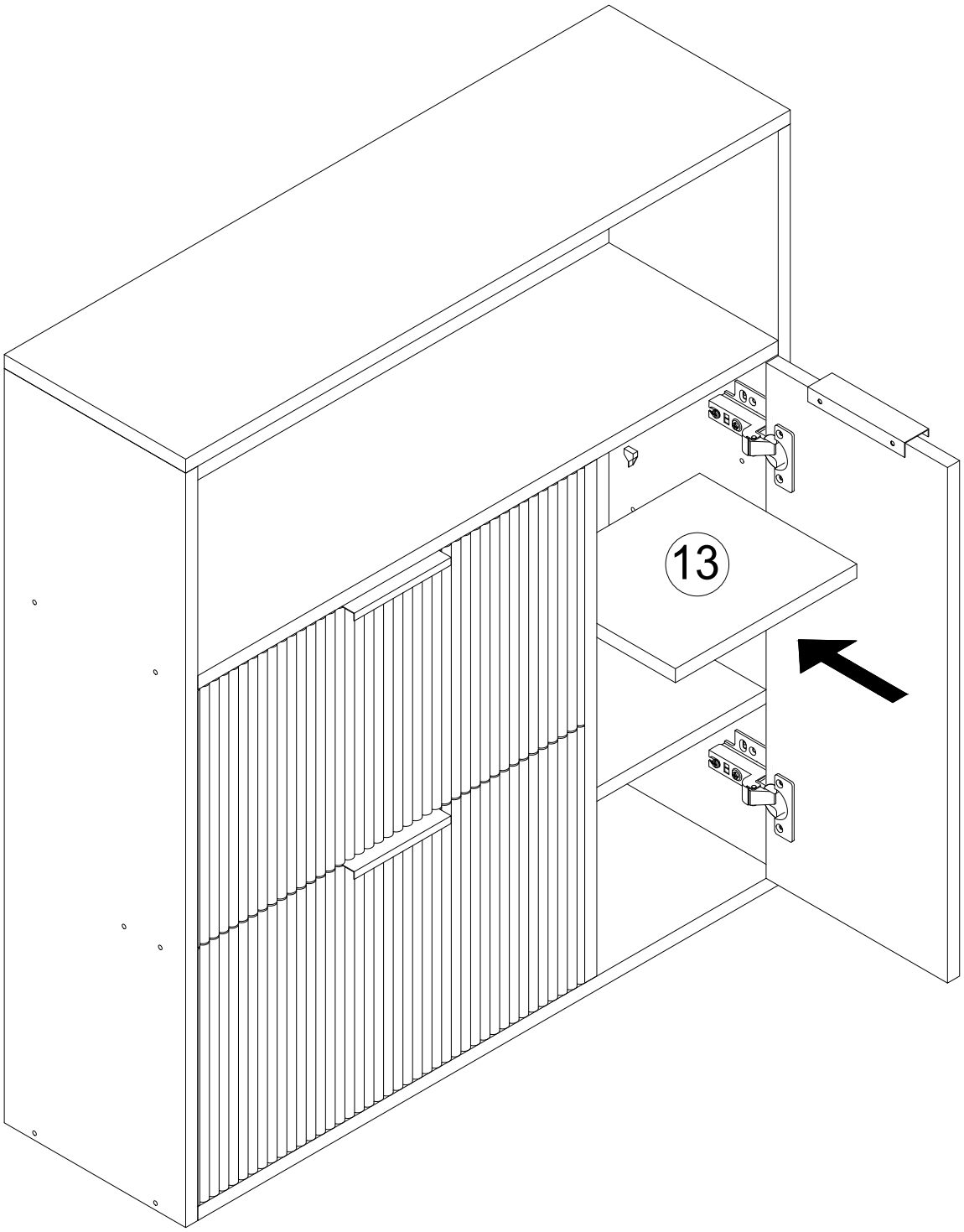

24

L x 10	R x 10	
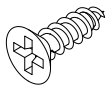 Ø3 x 12 mm		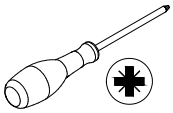

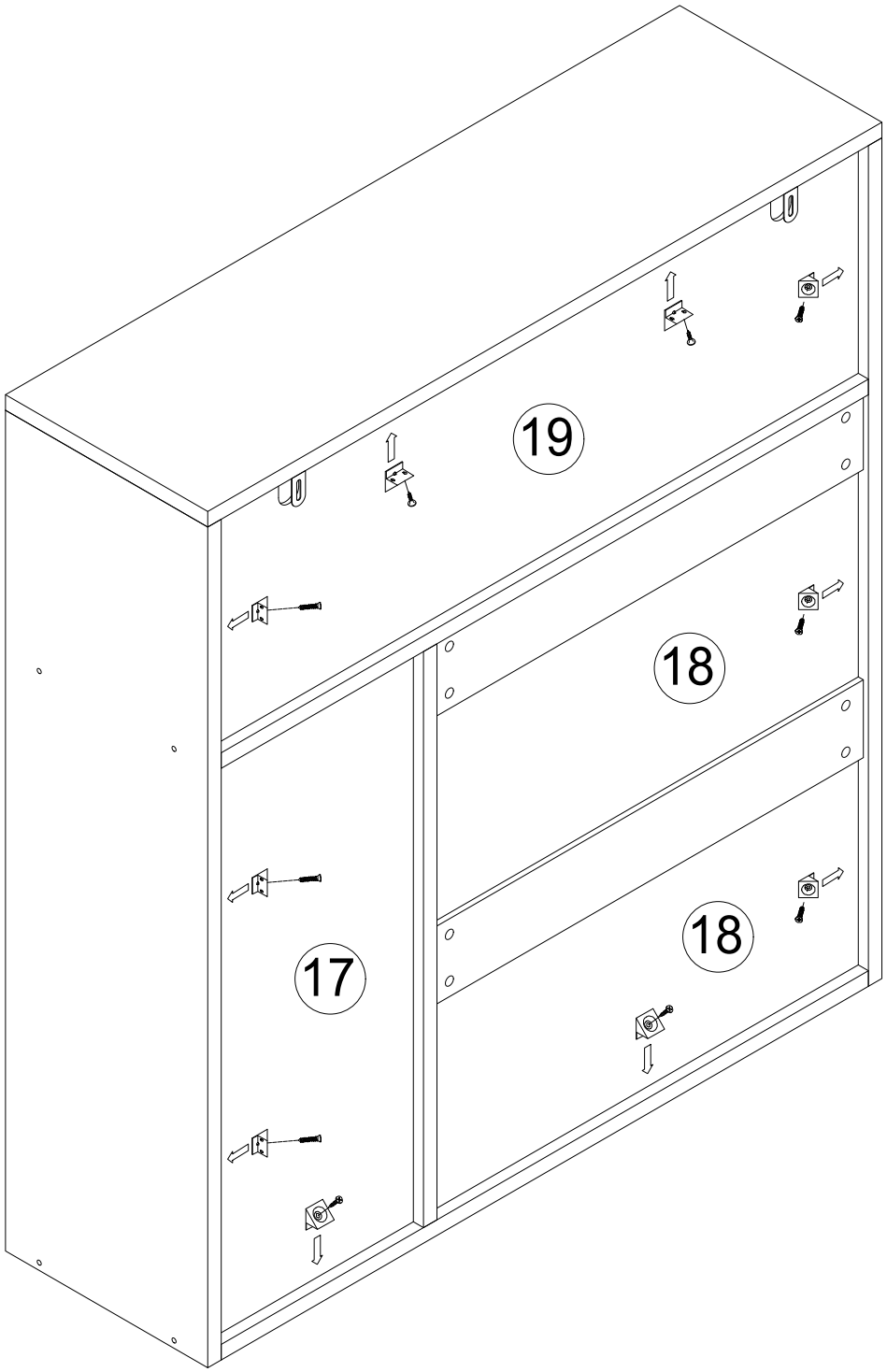

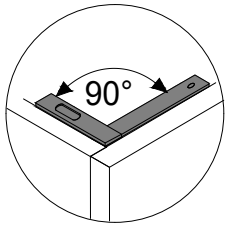

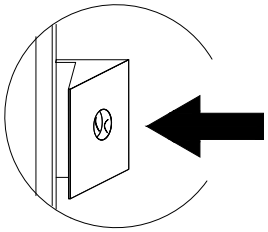

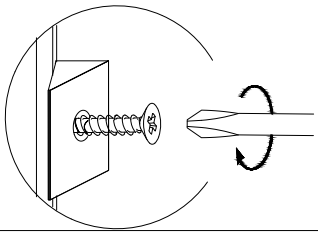

25

Q x 10

Please put the artwork sticker on the Screw hole position

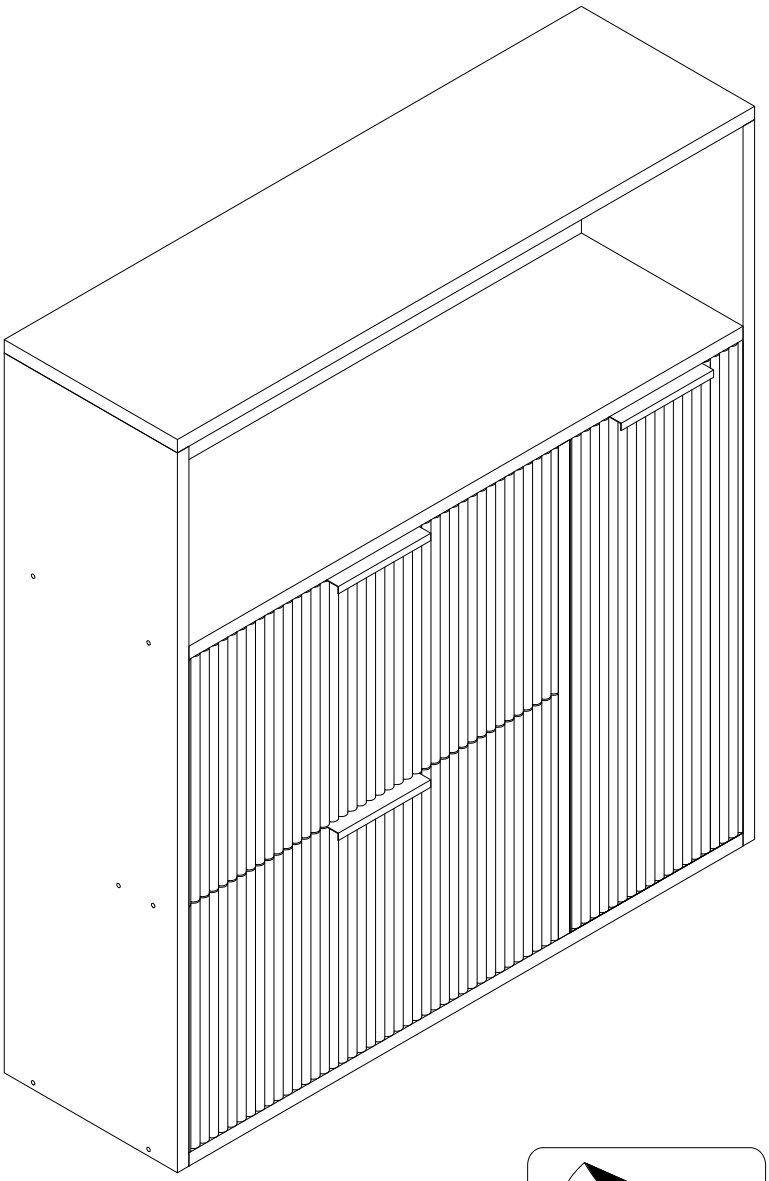

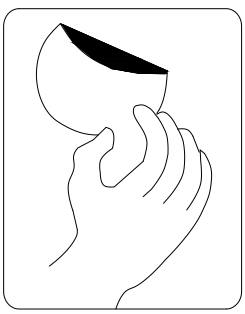

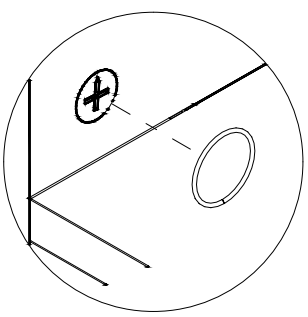

26

H x 6

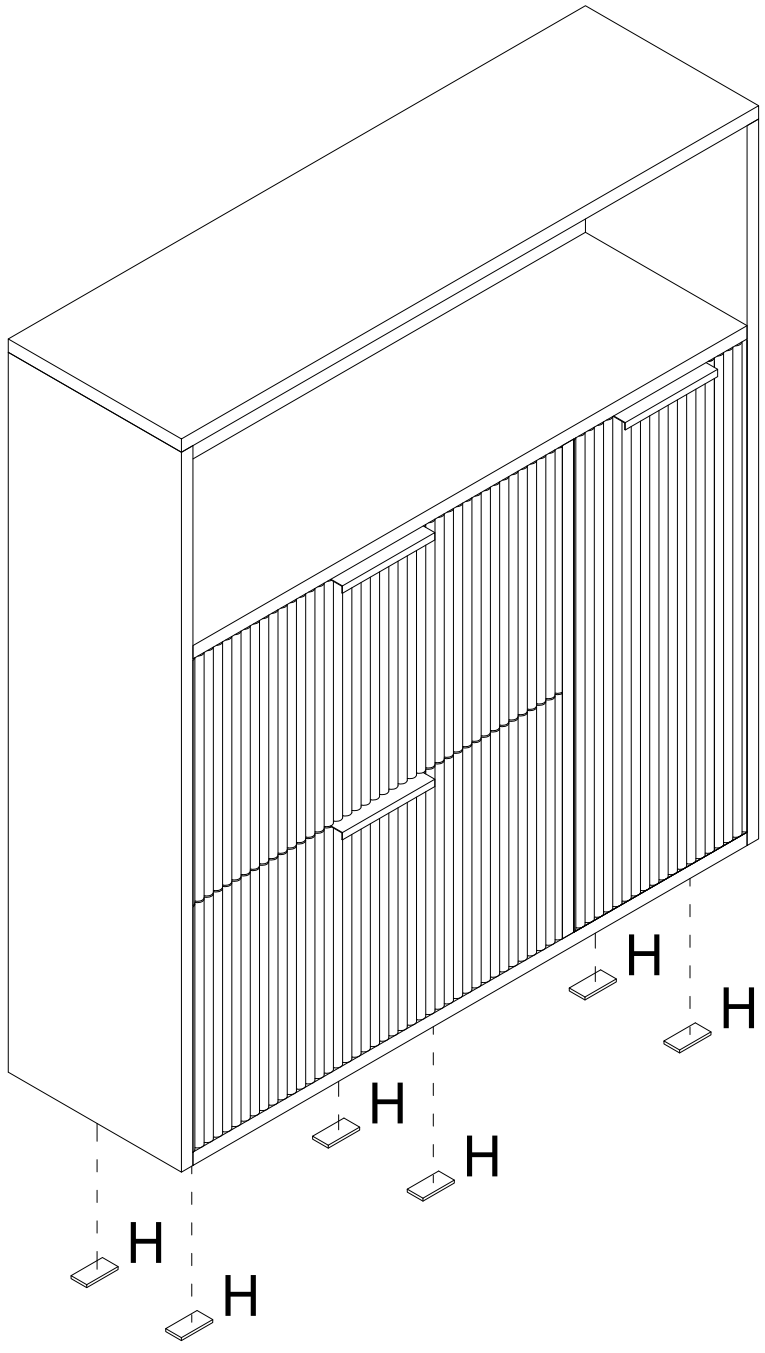

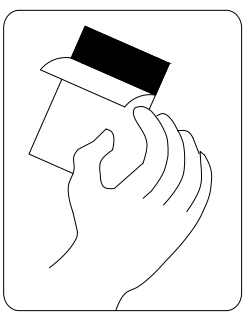

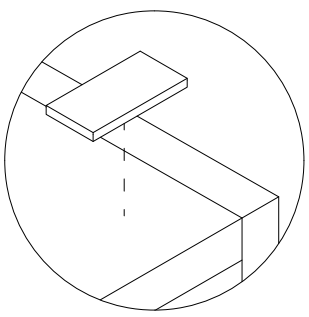

27

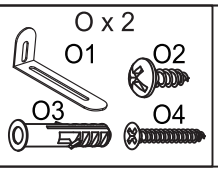

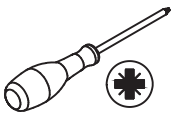

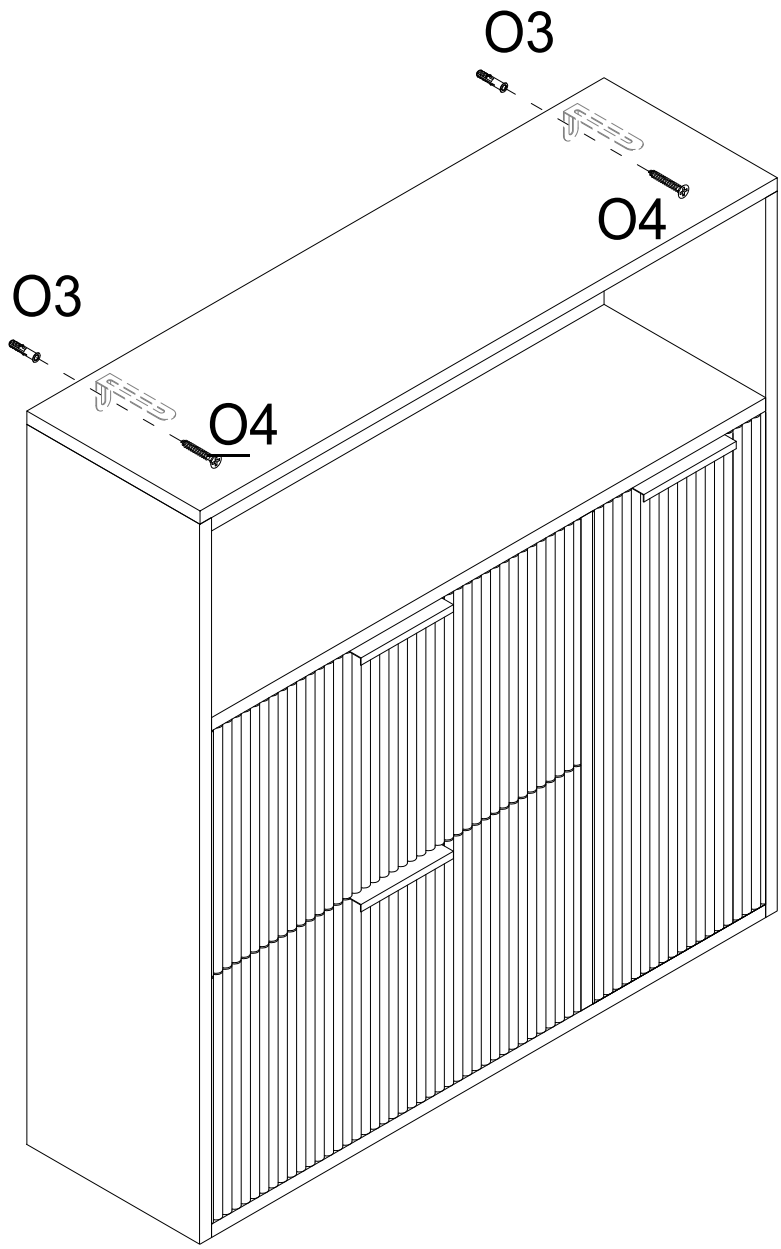

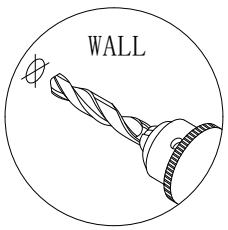

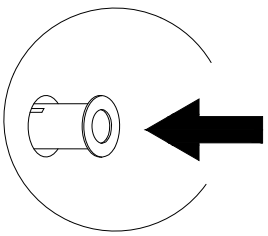

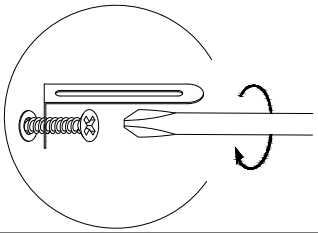

Manufacturer: Cao County Kaiqi Home Furnishings Co., Ltd
Address: Tongdaying Village, Zhuangzhai Town, Cao County, Heze

Made in China

