INSTRUCTION MANUAL

Dining Chair

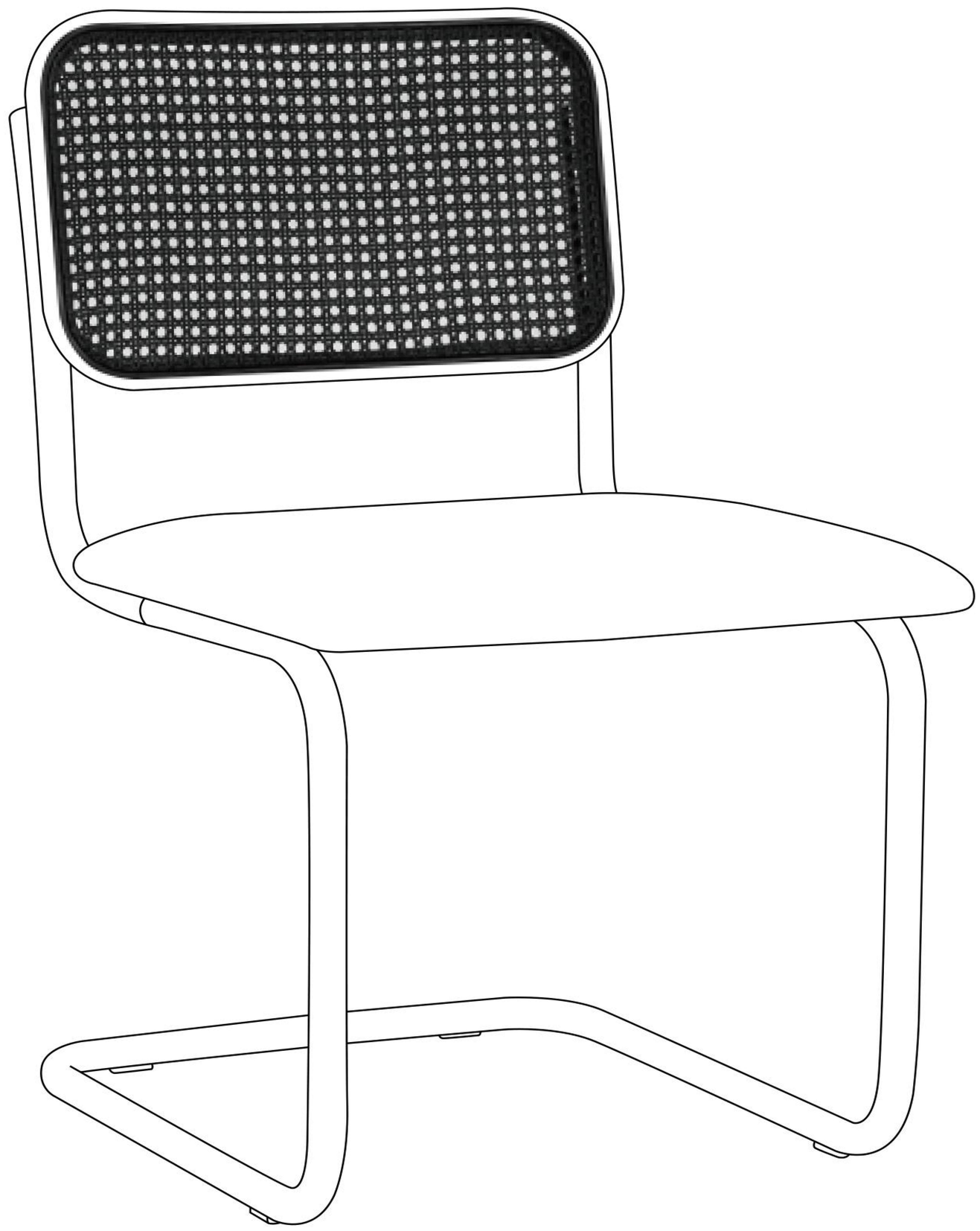

Please read the Manual carefully before operation. If the parts were missed or damaged, please contact us on Amazon or by after-sale e-mail. We will reply and solve the problem for you in 24 hours.

ASSEMBLY INSTRUCTION

STEP:1

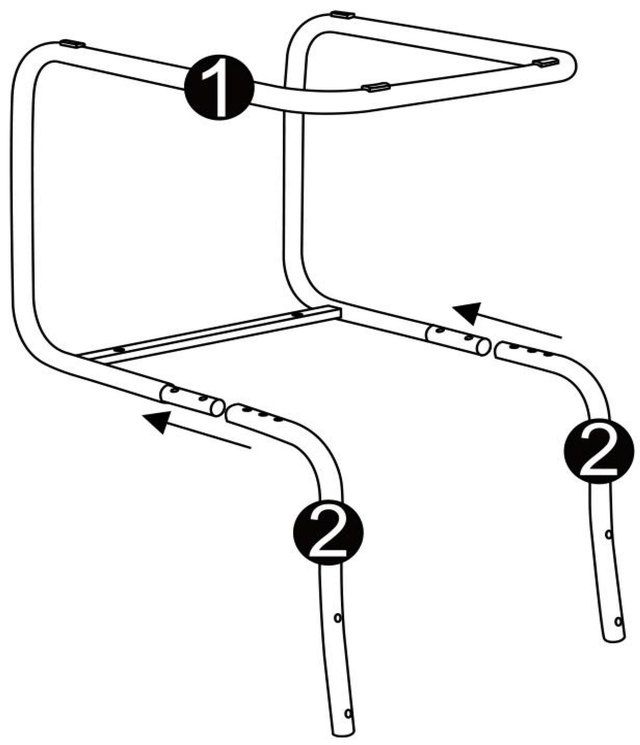

STEP:2

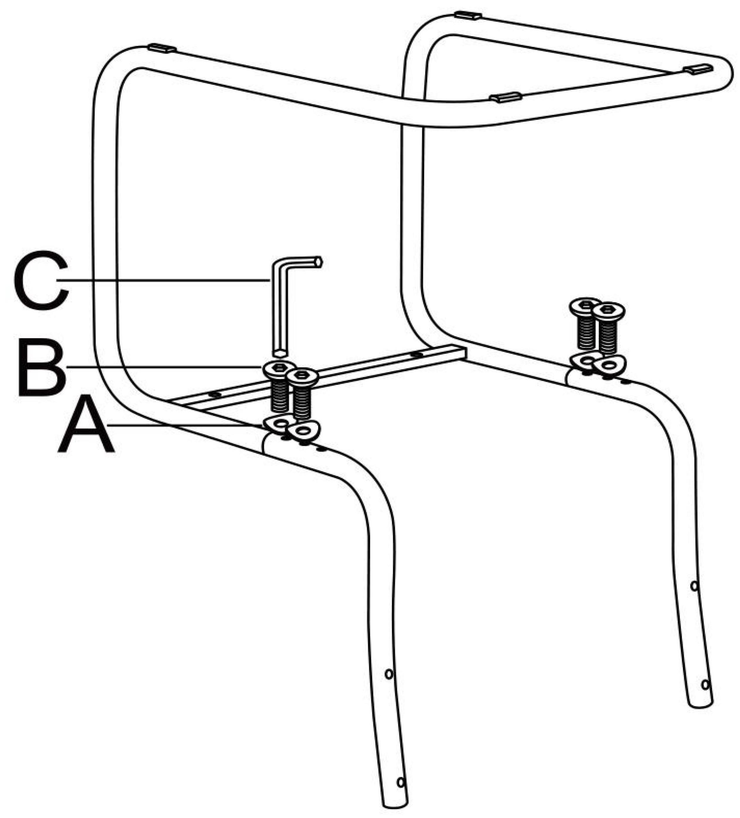

STEP:3

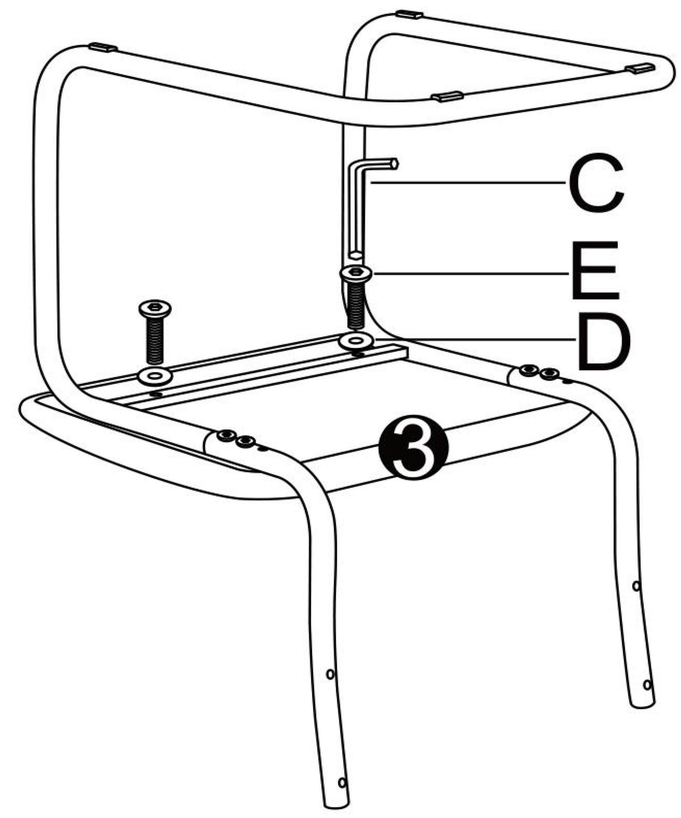

STEP:4

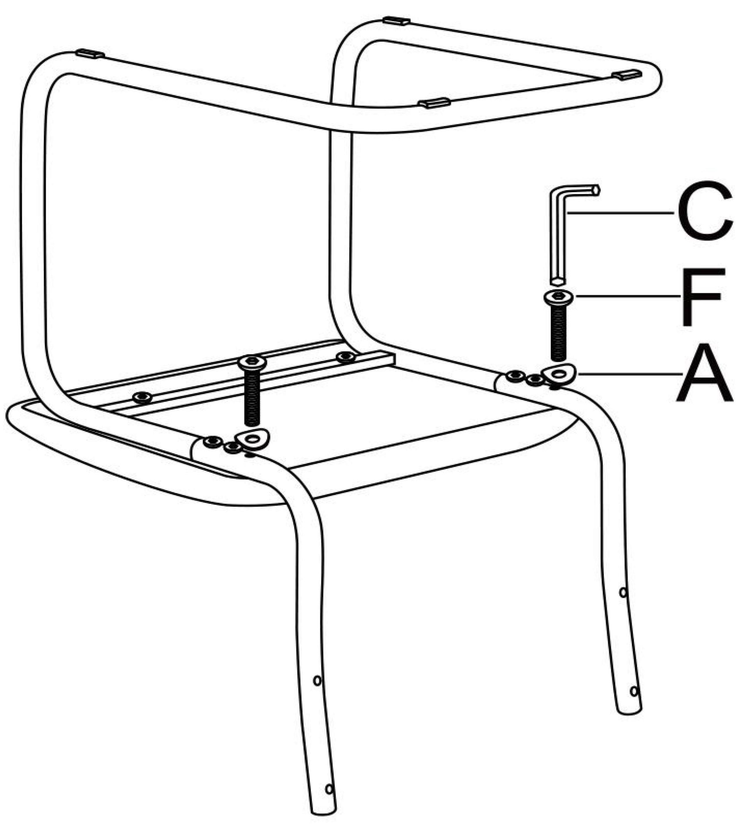

STEP:5

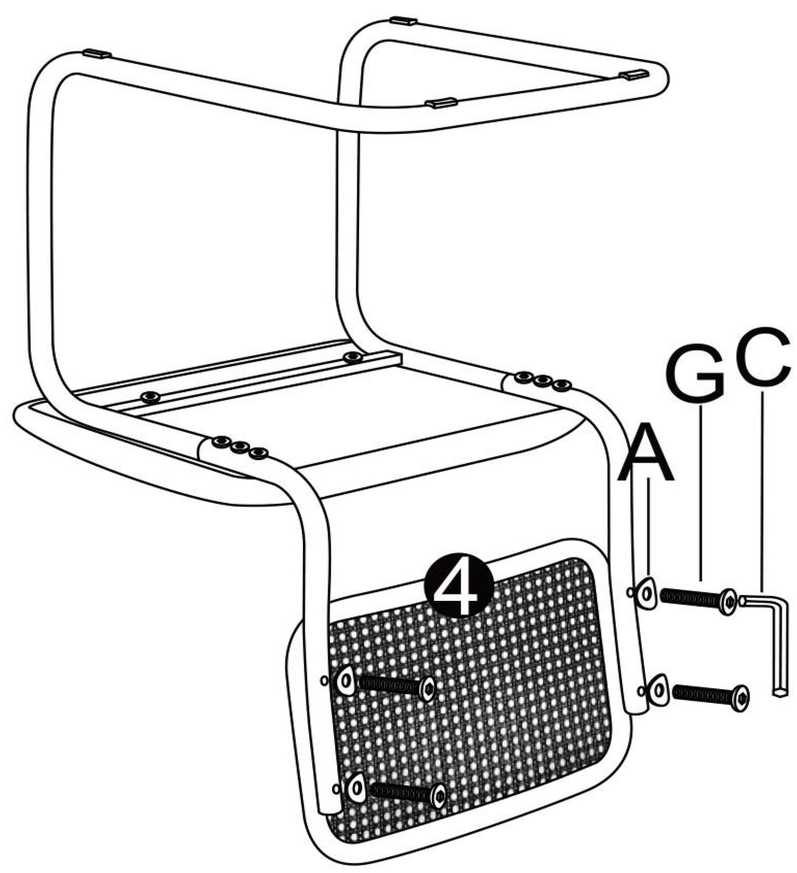

STEP:6

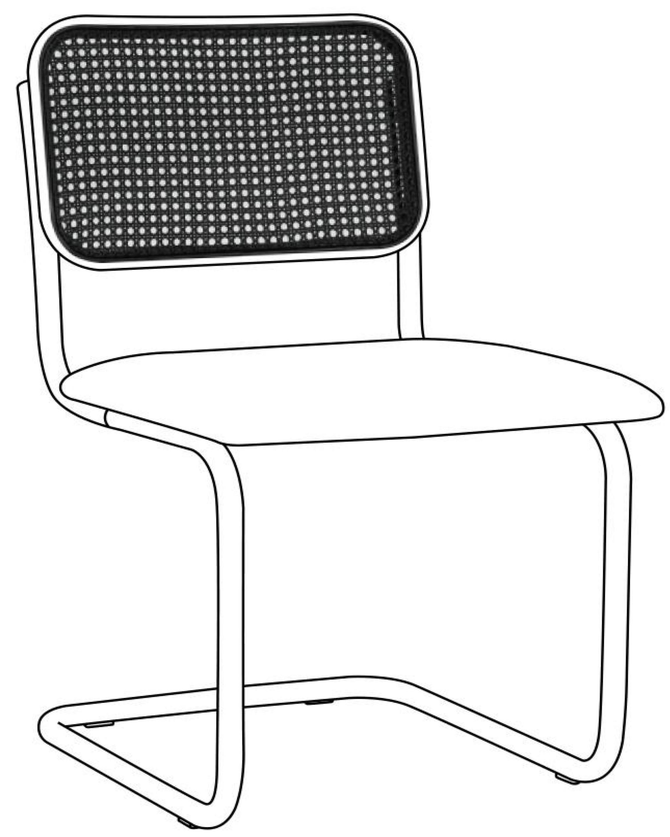

1 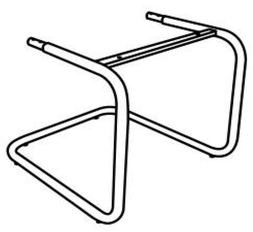 x1	2 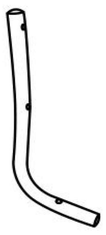 x2	3 x1	4 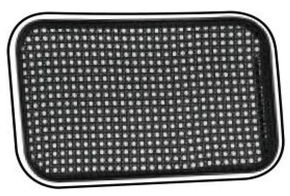 x1			
A M6xΦ18x1.5mm x10	B M6x16mm x4	C 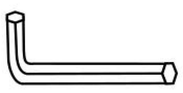 x1	D M6xΦ16x1.5mm x2	E 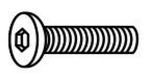 M6x25mm x2	F M6x40mm x2	G M6x35mm x4