Installation Guide

Linear Drain Shower bases

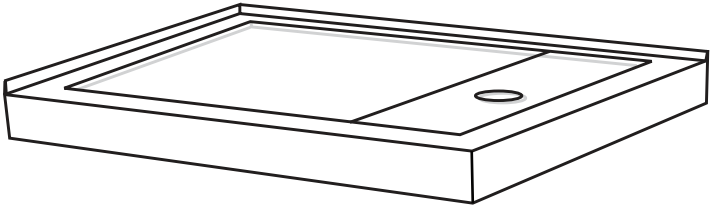

Thank You For Choosing Valley Acrylic

We strive to provide the international bath market with new and innovative bathroom products manufactured to the highest standards. Located in Mission, British Columbia, Valley aims to become an industry leader setting out the highest standards in quality and design.

All the information in this guide is based upon the latest product information available at the time of publication. We reserve the right to make changes in product characteristics, packaging, or availability at any time without notice.

Please take a few minutes to review this guide. If you encounter any installation or performance problems, please call 1-877-398-tubs (8827) from within the USA and Canada.

NOTE! Some units are available with left-hand or right-hand drain; check the drain position before drilling the floor.

www.valleyacrylic.com

VALLEY

Tools Required

- Measuring tape
- Screwdriver
- Electric drill
- 3/16" (5mm) & 1/8"(3mm) drill bits
- Level
- Hole saw
- Pencil
- Safety glasses
- Silicone sealant
- #8 x 1-1/4" screws (4.2mm x 32mm, Flat or Phillips head)
- Wood wedges and/or mortar Cement

Before You Begin

CAUTION: Risk of personal injury or product damage.

Handle with care. Product can break, chip or cause injury if handled carelessly. Get help lifting the shower base

- Read the instructions carefully before beginning the installation.
- Consult local building codes to make sure the installation complies with local standards.
- Remove the unit from its packaging. Before disposing of it, inspect the unit to make sure it is in good shape. Should inspection reveal any damage or defect in the finish, contact us. The warranty does not cover damages or defects in the finish once the unit has been installed. Valley's responsibility for shipping damages ceases upon delivery of the product in good order to the carrier. All complaints regarding damage due to transport must be made directly to the carrier.
- To protect the unit during installation, we suggest that you lay a piece of flat cardboard on the bottom.
- Do not remove the polyethylene protective film until installation is complete to gain maximum protection. However, please do remove the film where two surfaces will be in permanent contact.
- The floor must be level and strong enough to support the weight of the unit. If you are renovating, bring down the walls to install framing and plumbing.
- Make sure the walls are properly insulated and comply with the appropriate building code.
- Verify that all dimensions on the plan are the same as the ones of the unit.
- This product must be used with a shower door. Failure to use this product without a shower door may result in property damage, and personal injury. Follow all plumbing codes applicable to the installation of this product.

STRUCTURE INSTALLATION

NOTE: DO NOT build the surrounding structure before receiving your unit. Structure measurements should be verified against the unit to ensure a proper fit.

Before installing the unit, the frame and plumbing must be completed according to the instructions. If you are renovating, remove the walls in order to install the appropriate structural frame.

PLUMBING

Make sure you install all plumbing and drainage before securing the unit. It is always recommended to have a competent, professional plumber do the plumbing installations. Before drilling a hole in the floor for the drainpipe, make sure there are no hidden elements underneath (pipes, floor joists, heating ducts, electrical wires, etc).

LEVELLING & SUPPORT

The unit must be installed perfectly levelled. Level the unit using wooden shims/ wood edges fixed to the floor under the wooden base or using mortar cement.

To provide additional support, enhance soundproofing and facilitate levelling, spread a layer of cement and cover it with a 1/16" (2mm) sheet of polyethylene sheet. The layer must be thick enough to facilitate the levelling of the unit without raising it.

Once the unit is in place, make sure that it is level in both directions for proper draining. The front base flange must rest evenly on the floor and it must not be raised too high.

DRILLING

Mark the location of stud on the tiling flange of the unit and drill 3/16" (5mm) pilot holes. Make sure the holes line up with the studs. Drill directly on the finished side, secure the shower pan to studs using 1/4" (recommended) flat head screws. Tighten the screws by hand driver only (using high torque drill driver may damage the tiling flange).

FRAMING

NOTE! Structure measurements must be verified against the unit.

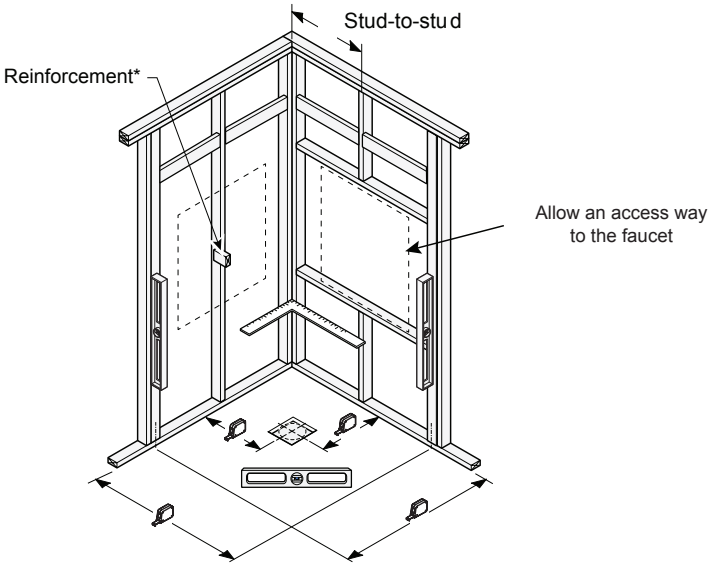

Corner Installation

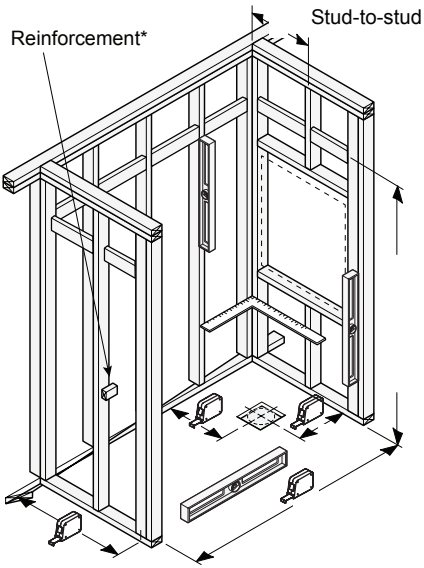

Alcove Installation

*Reinforcement pieces must be installed behind the walls

BASE INSTALLATION

Step 1

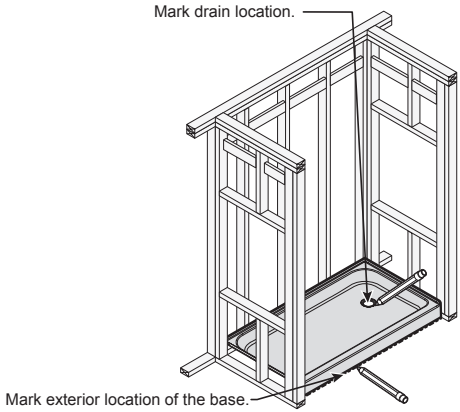

Step 2

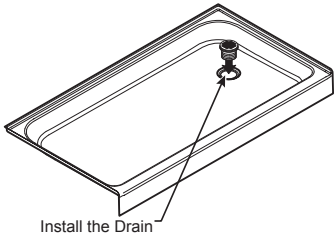

Step 3

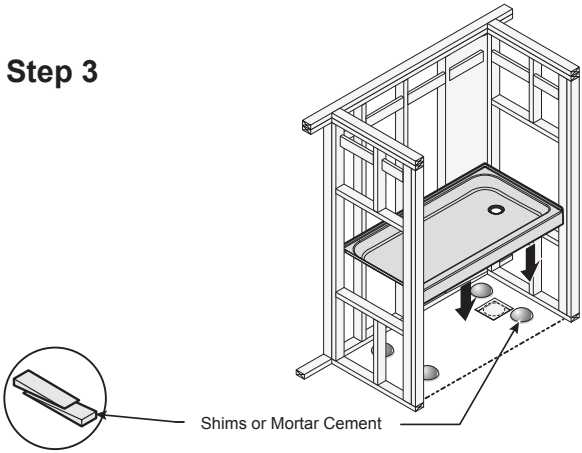

BASE INSTALLATION

Step 4

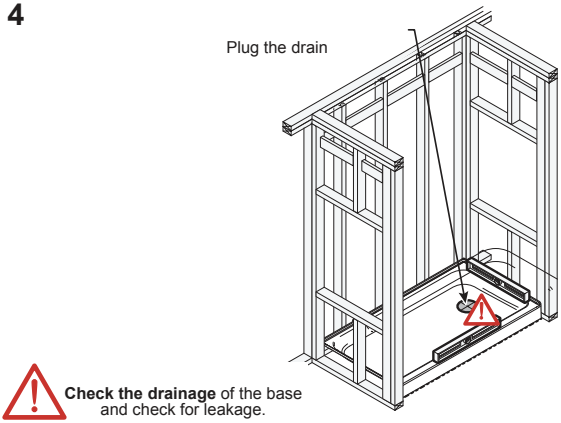

Step 5

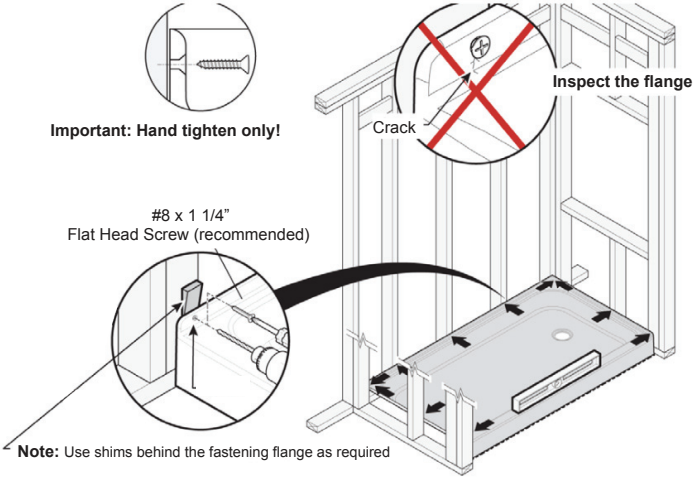

CONNECTING THE PLUMBING

Connect plumbing (drain, faucets, etc.)(not included) according to local standards and to the general rules at the beginning of this guide. Make sure that all joints are waterproof. Inspect for leaks.

FINISHING UP

Wall finish should cover the fastening flange. Seal gaps and joints with silicone sealant.

Drywall Finishing

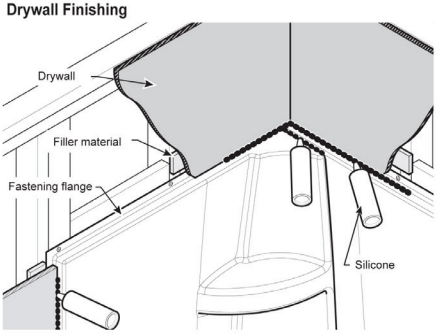

Tile Finishing

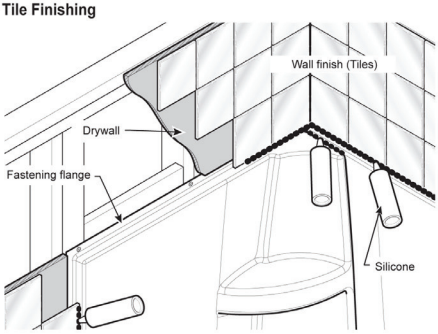

Install the shower door following the installation instructions included with the door. (shower door not included)

MAINTENANCE

Regular disinfections provide an effective defence against various types of bacteria susceptible of developing in the deposits that build up over time in all bathtubs and showers.

For daily maintenance, use a moist cloth and gentle liquid detergent.

For acrylic surfaces, occasional use of a special acrylic surface cleaner will add lustre and protect the finish.

DO NOT use abrasive cleaners, metal brushes, or any items or products that could scratch or dull the surface.

Joint compound: use a plastic or wood spatula covered with a damp cloth. Do not use a metal blade or a metal brush. If a rubber mat is used, it must be removed immediately after each use.

Ignoring these recommendations will cause damage not covered by the warranty.

Congratulations! You are now a part of the Valley Acrylic Family, and an owner of the best quality sanitation products in the country.

Valley Acrylic Products
33778 North Railway Ave
Mission, BC, V2V 1H6
Canada

Phone: 1.877,398.8827
Fax: 604.820.0124
sales@valleyacrylic.com
www.valleyacrylic.com