97124 Product Installation Instructions

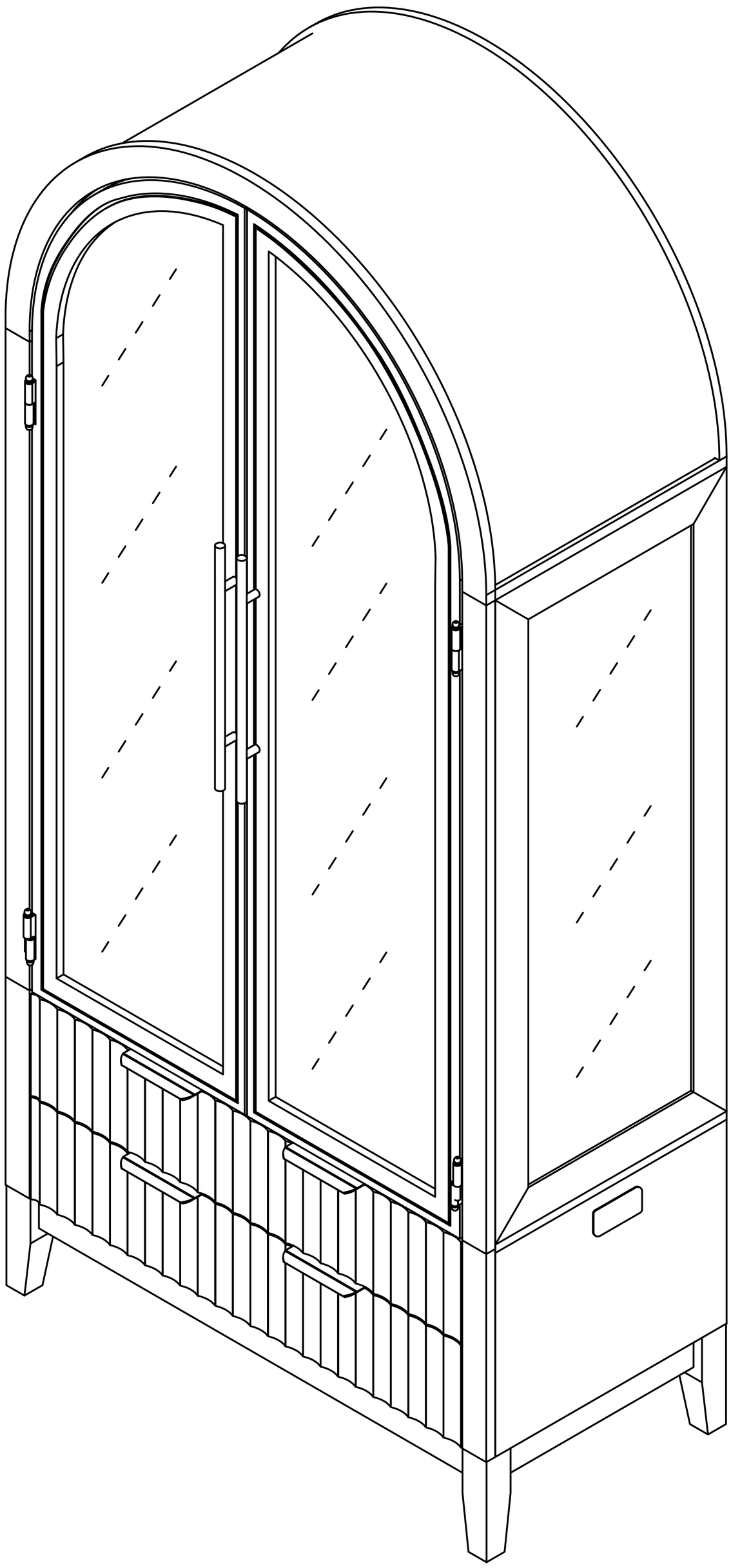

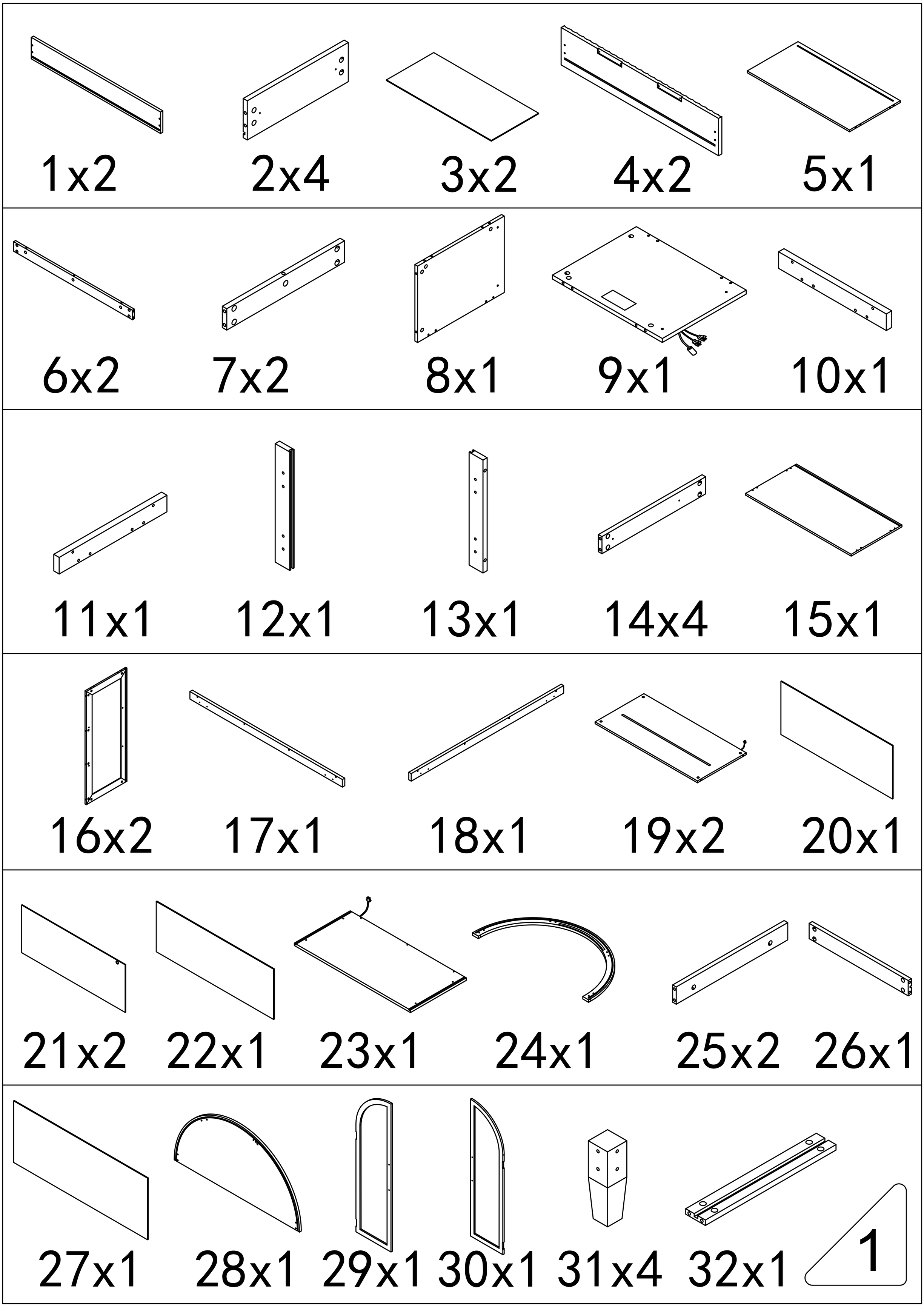
1x2
2x4
3x2
4x2
5x1
6x2
7x2
8x1
9x1
10x1
11x1
12x1
13x1
14x4
15x1
16x2
17x1
18x1
19x2
20x1
21x2
22x1
23x1
24x1
25x2
26x1
27x1
28x1
29x1
30x1
31x4
32x1
1

Accessories list

A		Two in one screw (6x28mm)	119pcs +6pcs	
B		Two in one nut (10x12mm)	119pcs +6pcs	
C		Wood chipping (6x30mm)	16pcs +4pcs	
D		Handle & Screw (3x12mm)	4pcs	8pcs +2pcs
E		Screw & Guide (3x12mm)	20pcs +4pcs	4pcs
F		Hinge & Screw (3.5x12mm)	2pcs	16pcs +2pcs
G		Adjuster foot	4pcs	
H		Hinge & Screw (3.5x12mm)	2pcs	16pcs +2pcs
I		Wire	1pcs	
J		Sticker (φ20mm)	1pcs	4pcs +2pcs
K		Arch handle & Screw (4x22mm)	2pcs	4pcs
L		Fixing Clip & Screw (3x16mm)	16pcs +1pcs	
M		Forked line	2pcs	
N		Wire Clamp	5pcs +1pcs	
O		Door Magnet & Screw (3x12mm)	1pcs	2pcs +1pcs
P		Iron Sheet & Screw (3x10mm)	2pcs	2pcs +1pcs
Q		anti-tipping tape	1pcs	
		Screw & gasket (3.5x14mm)	1pcs	2pcs
		Screw (4x45mm)	1pcs	1pcs
		AC/DC Adapter (12V⎓3.0A)	1pcs	
R		4pcs		

Double-head screwdriver, use as required

1pcs

Product structure decomposition

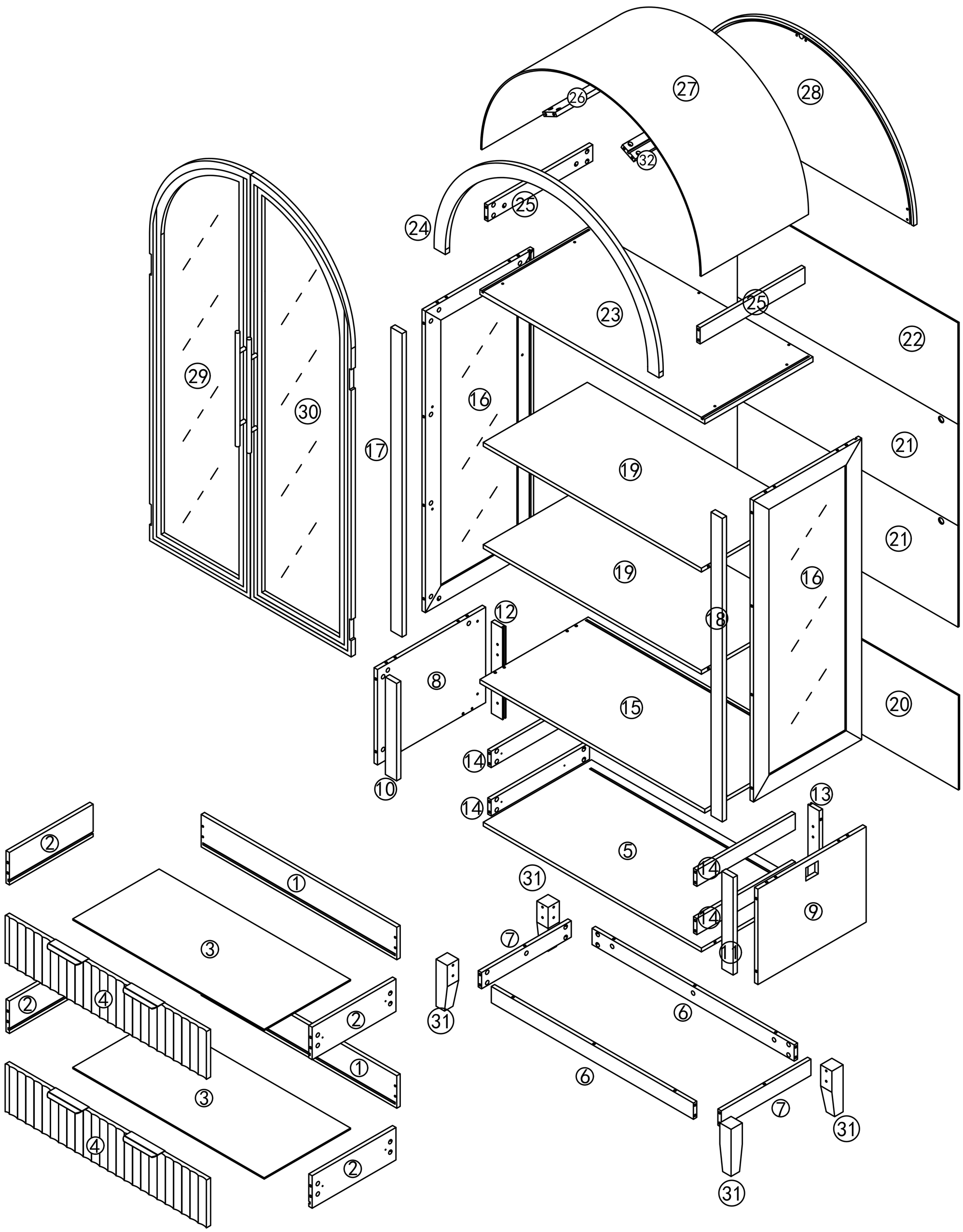

3

A	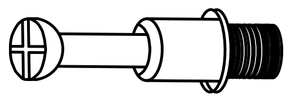	16pcs	B		16pcs	D	4pcs 8pcs
E	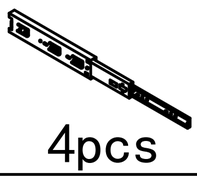 4pcs 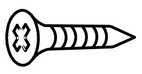 8pcs						

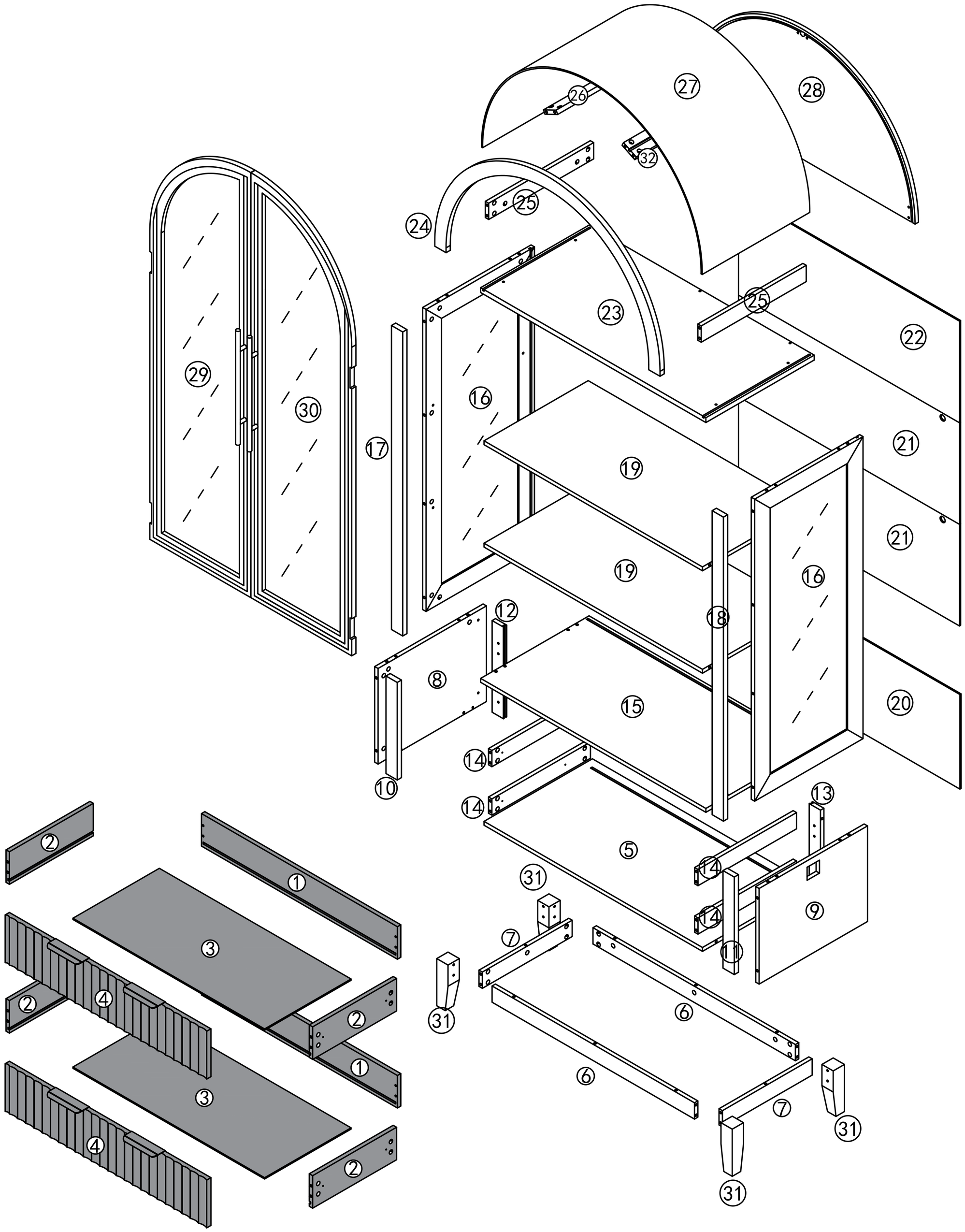

4

Use parts A and B

Step1

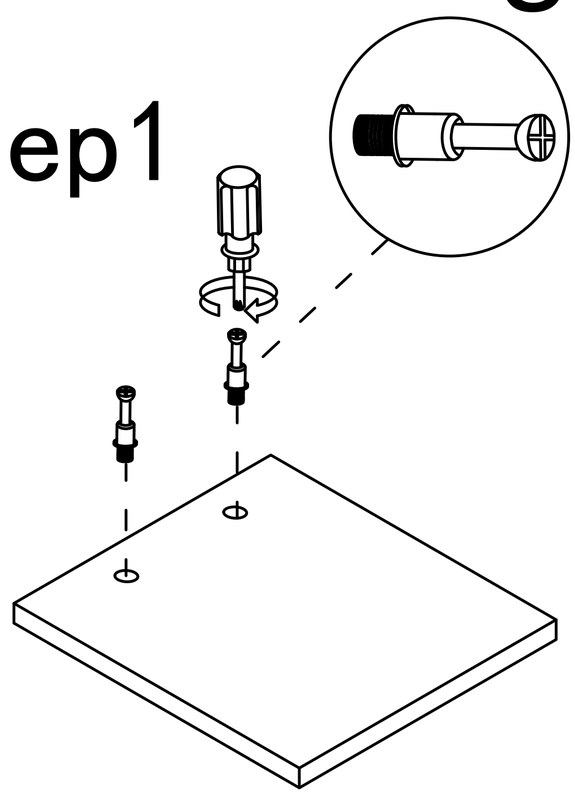

Step2

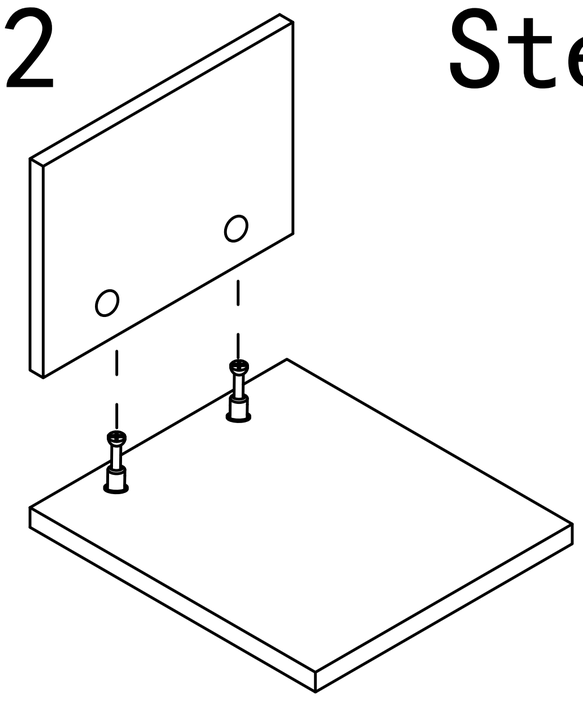

Step3

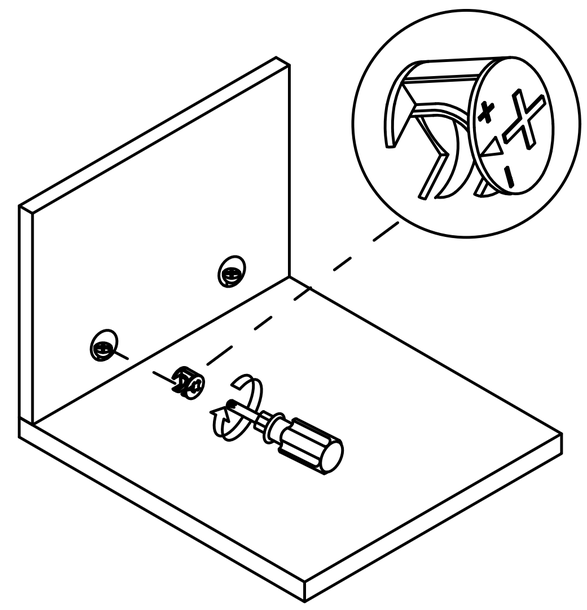

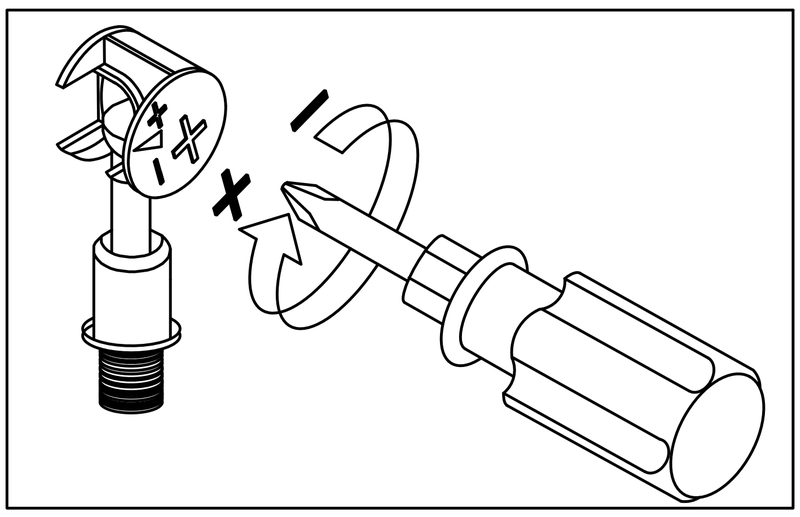

Use a screwdriver to lock in the direction of the "+" sign

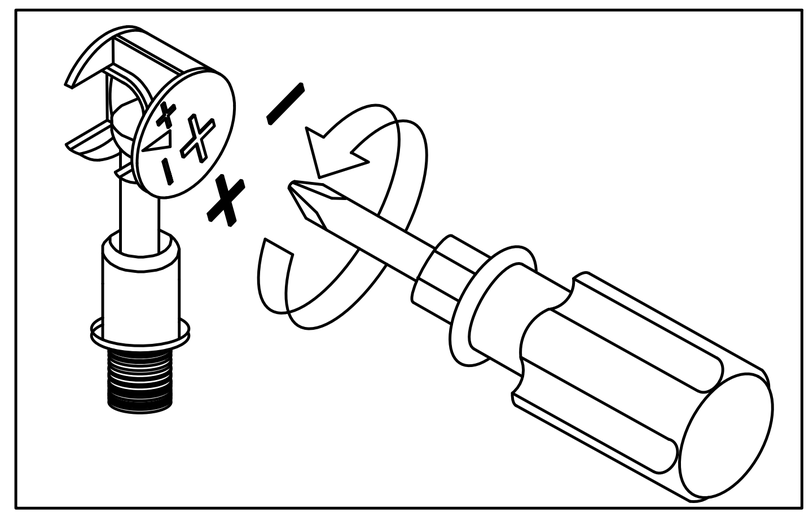

Disassemble along the direction of "-" sign

Step 1

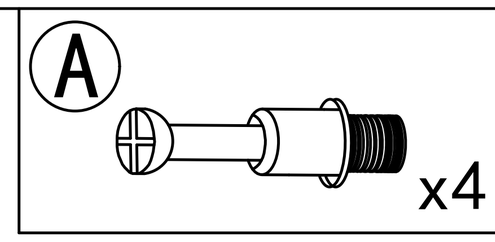

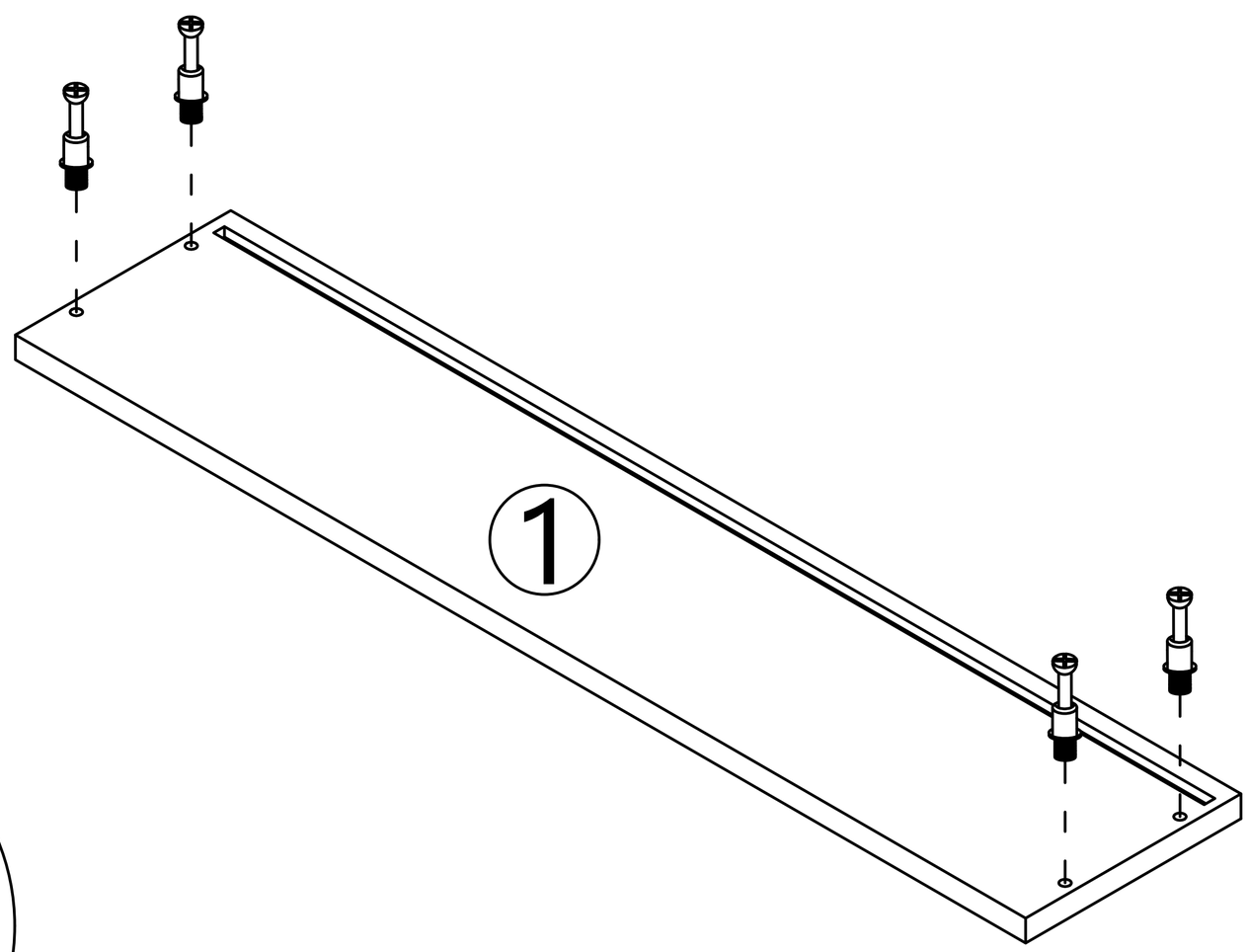

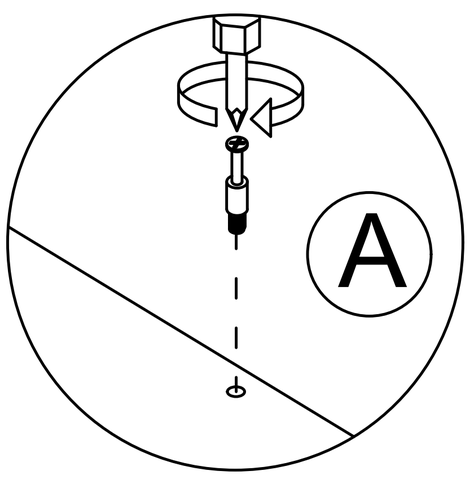

Step 2

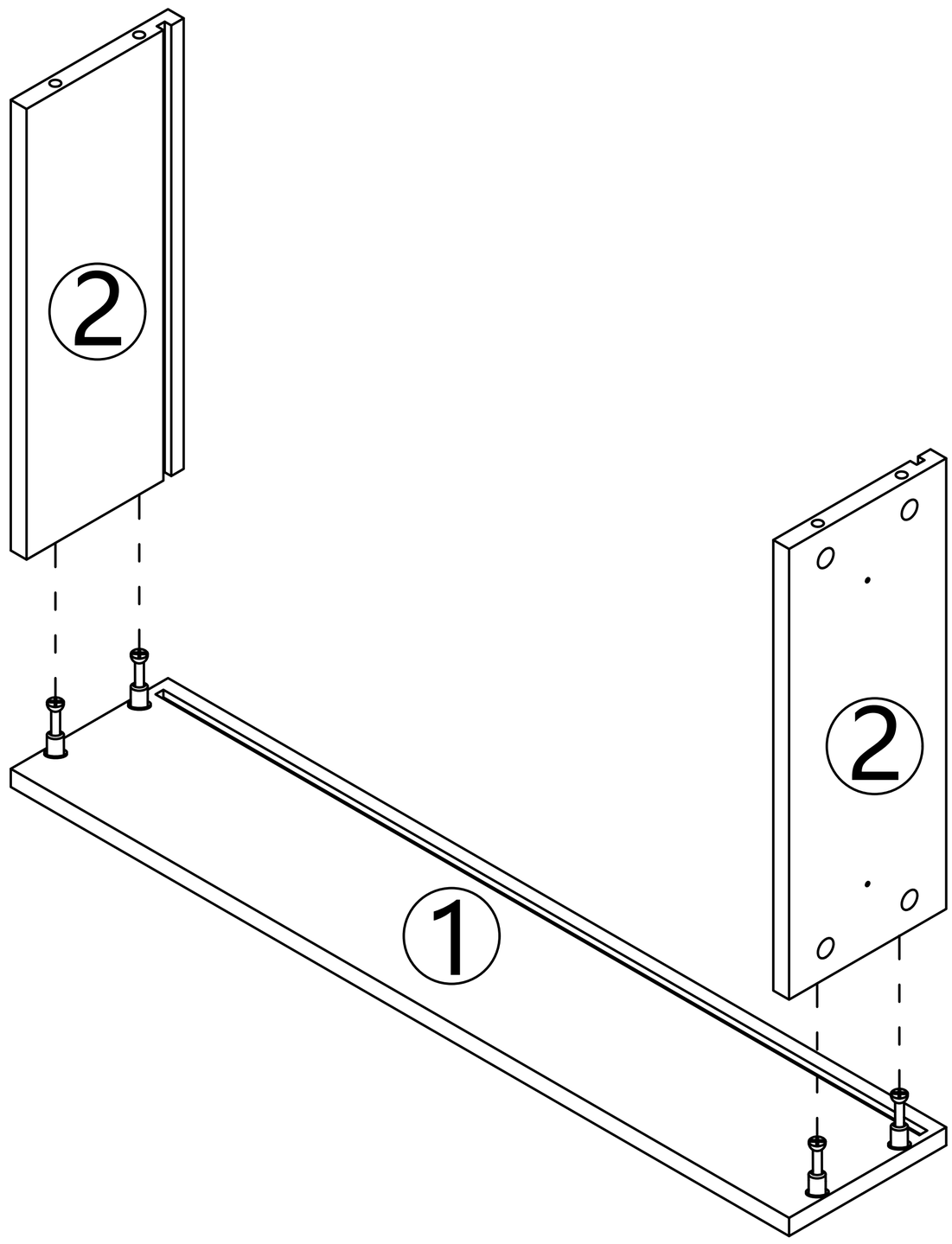

Step 3

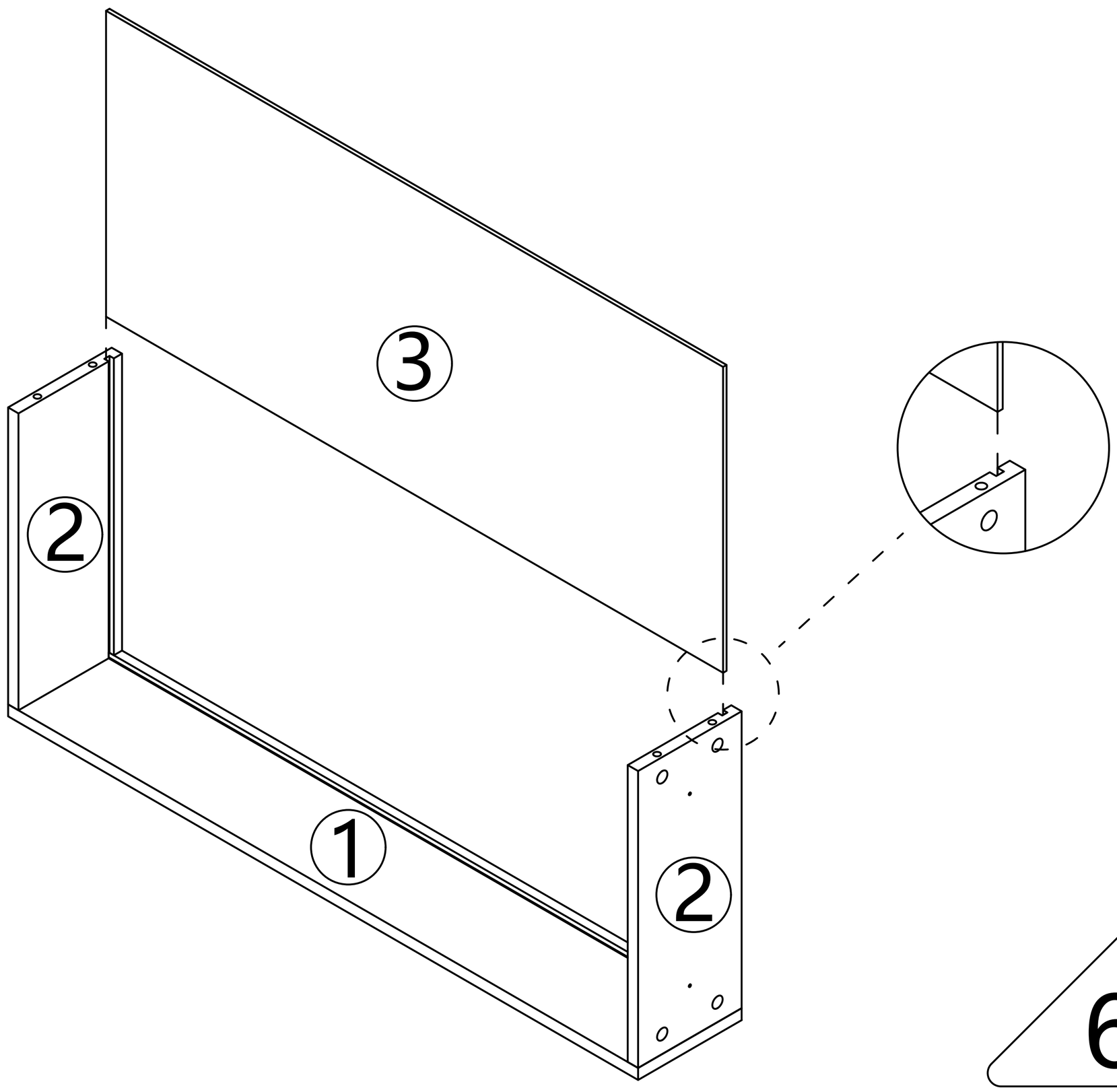

Step 4

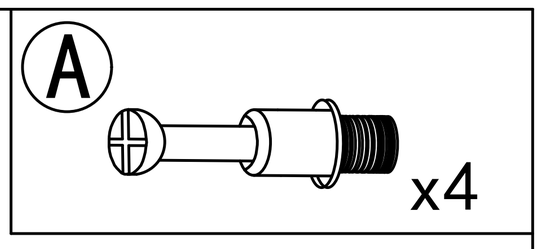

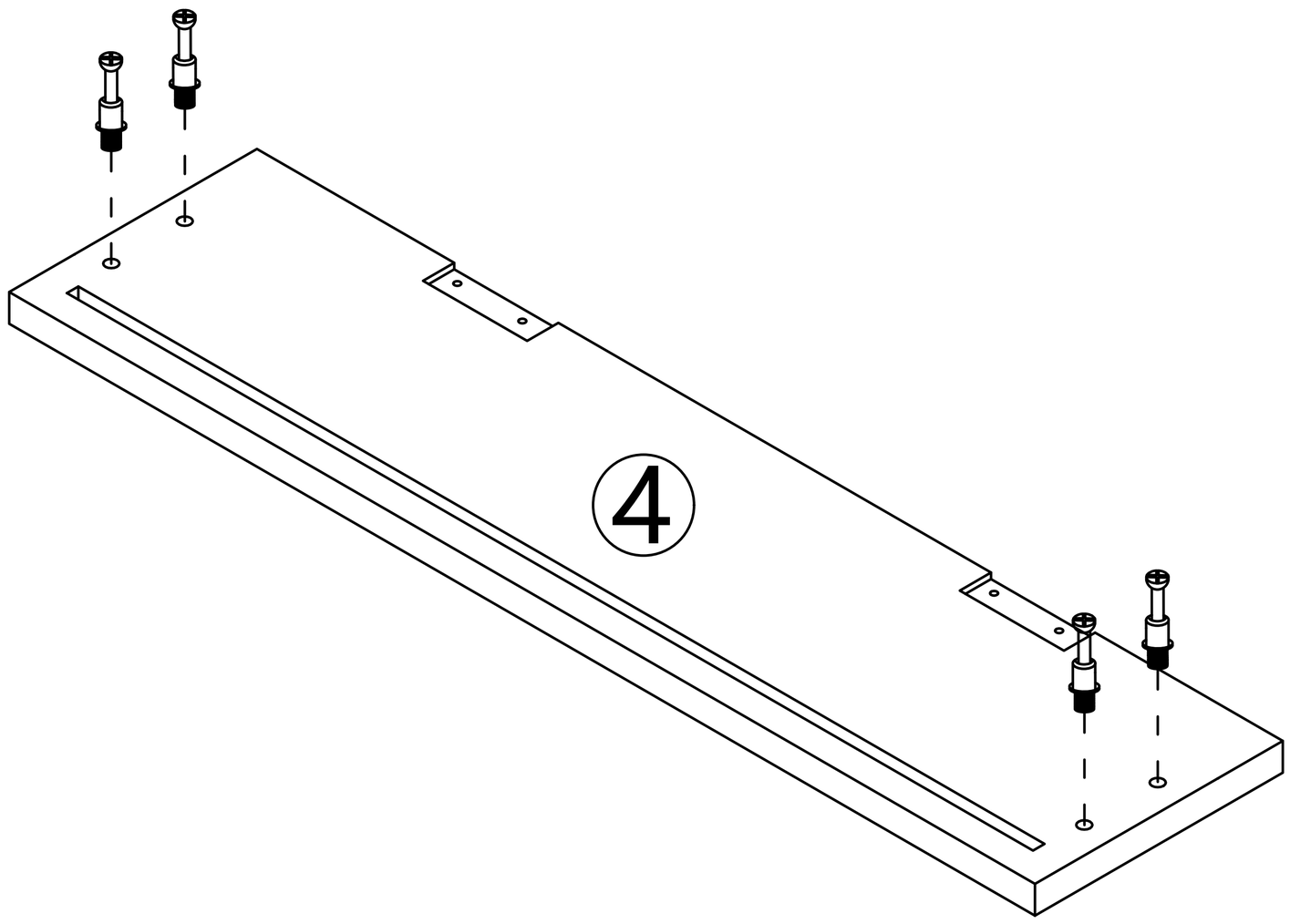

Step 5

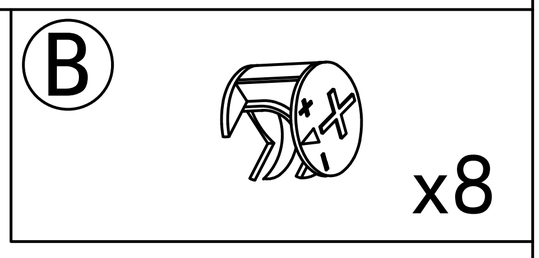

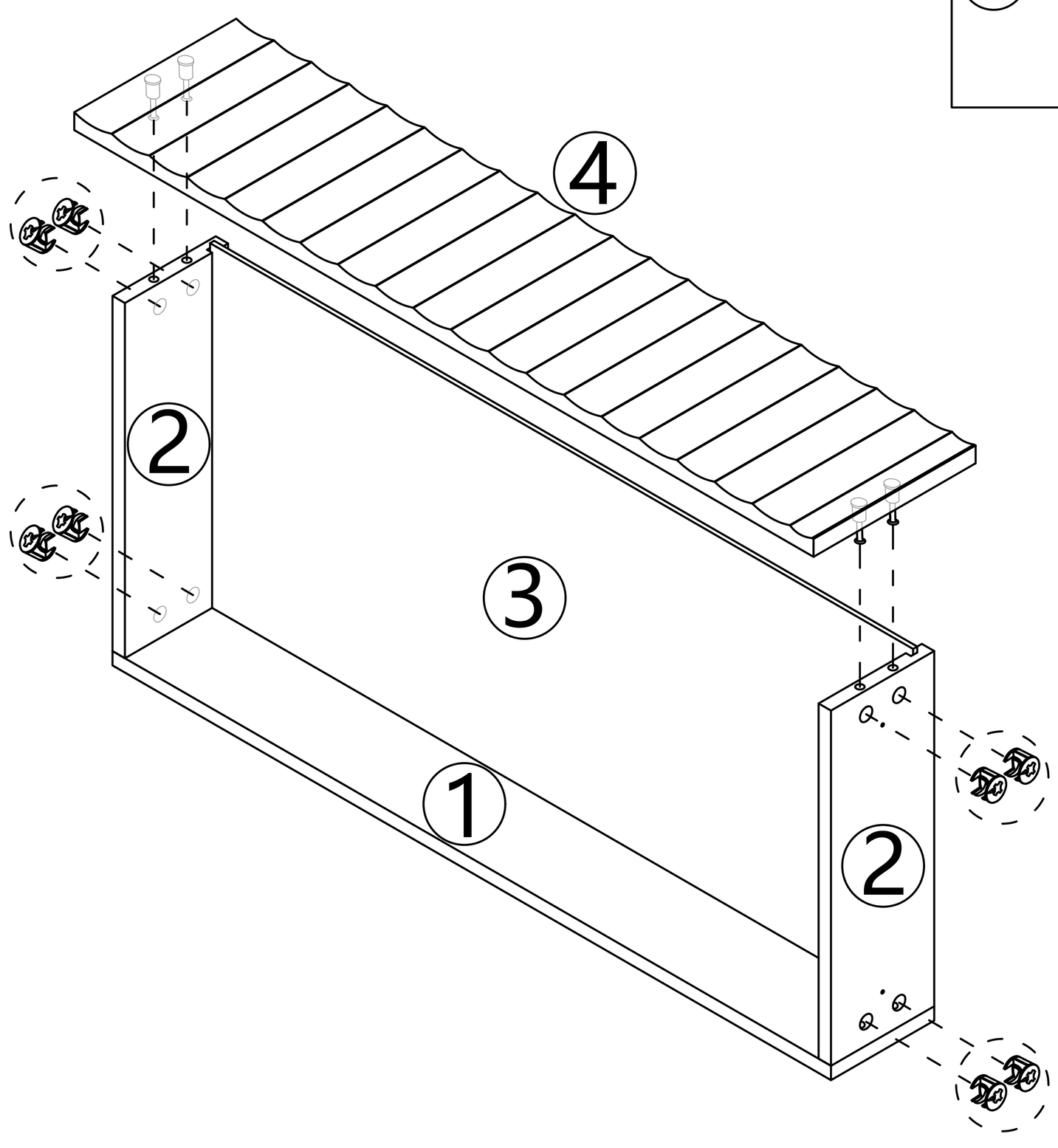

Drawer rail breakdown diagram

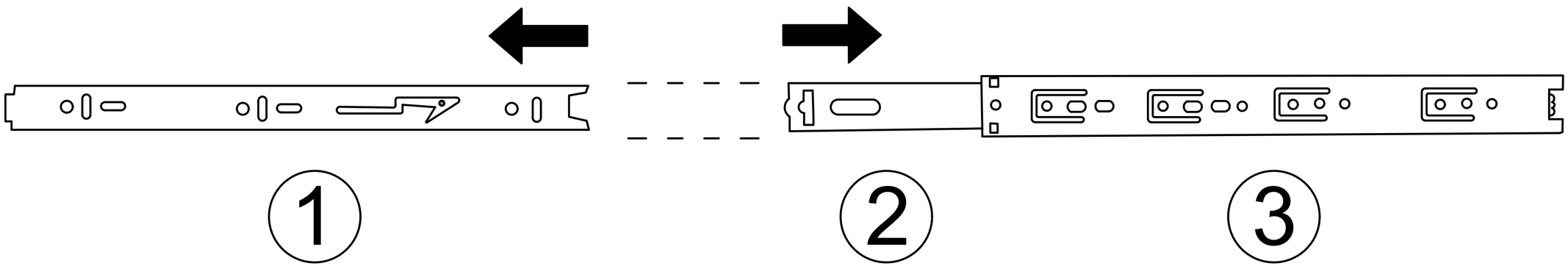

① Dismantle the schematic diagram

Step 1 : Pull the rails apart

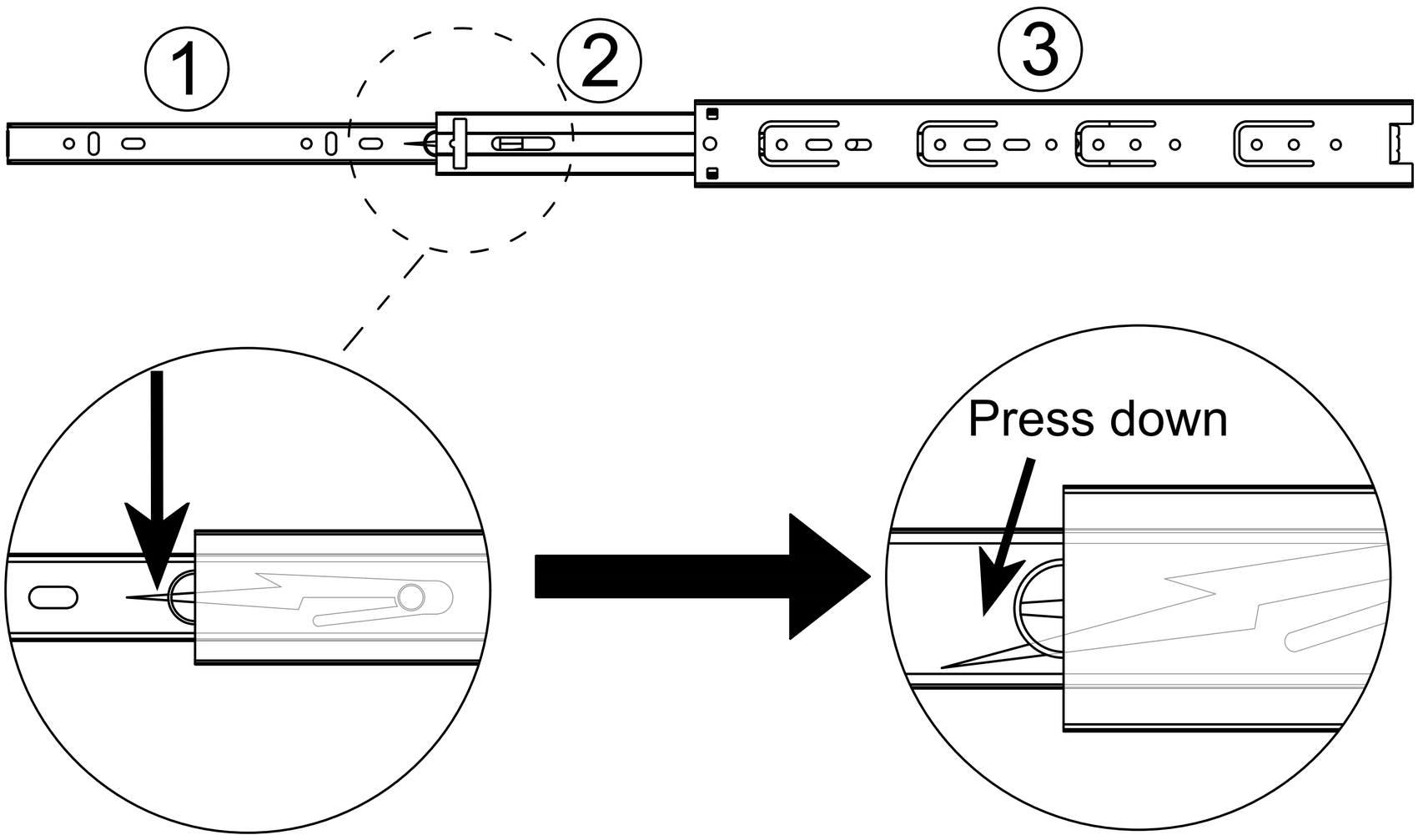

Step 2 : Press the nylon button and pull out ①.

Drawer rail decomposition completed schematic diagram

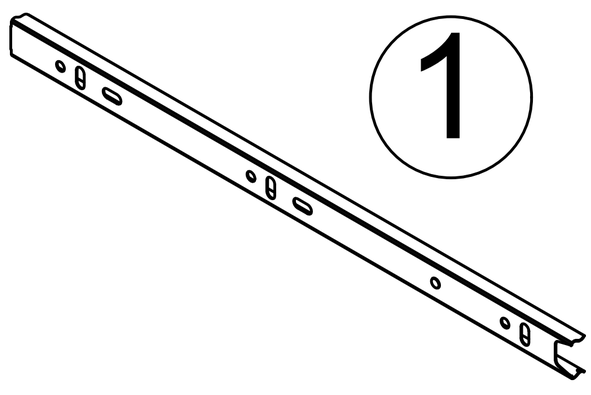

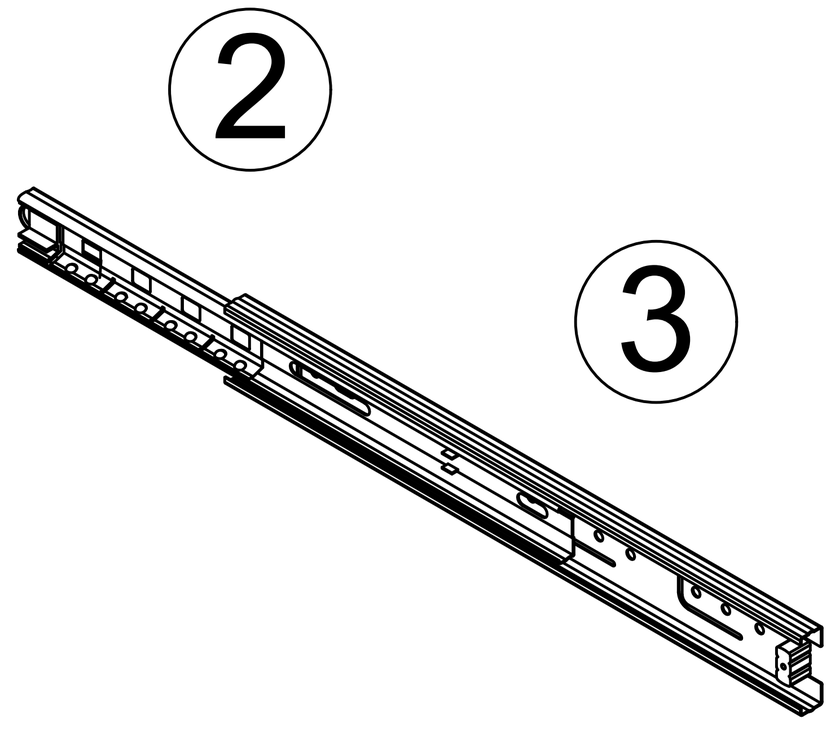

Step 6

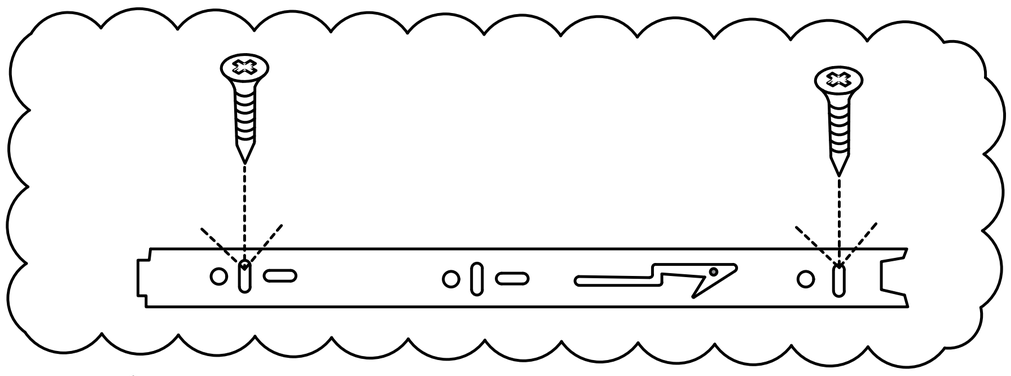

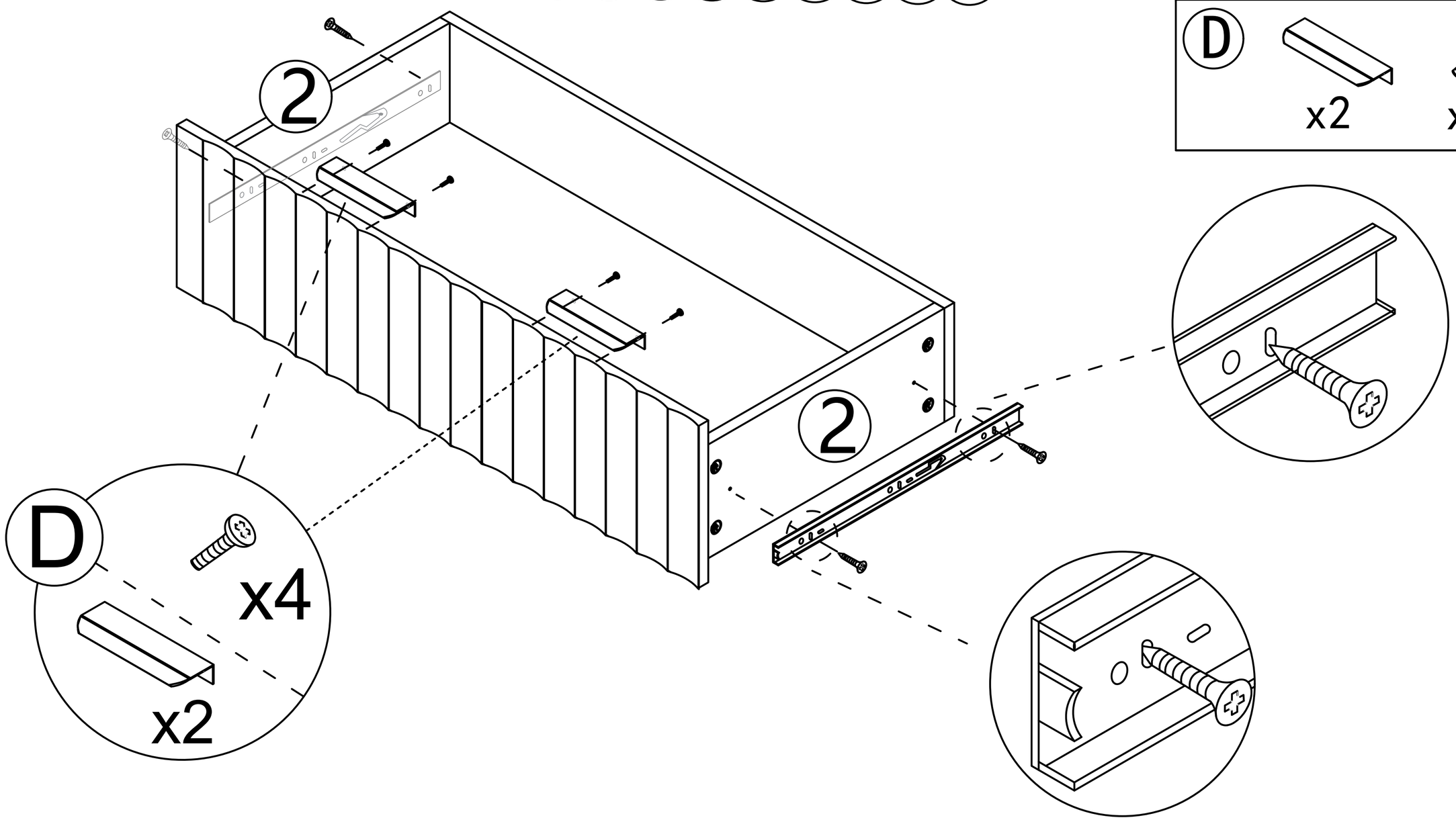

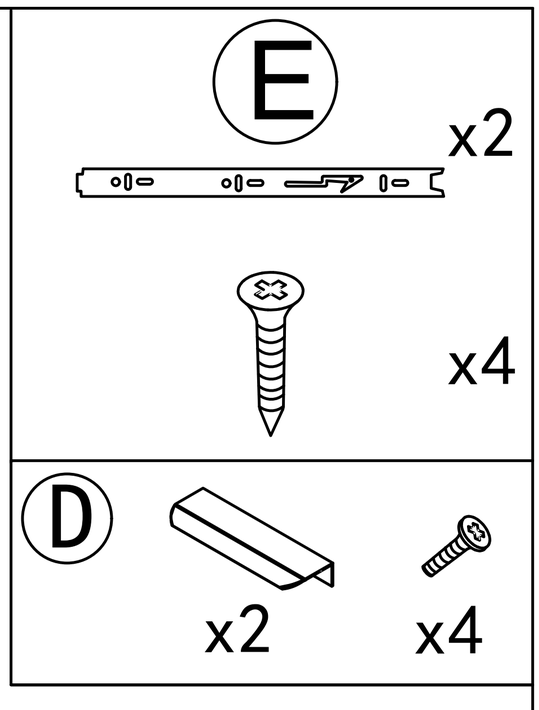

Step 7

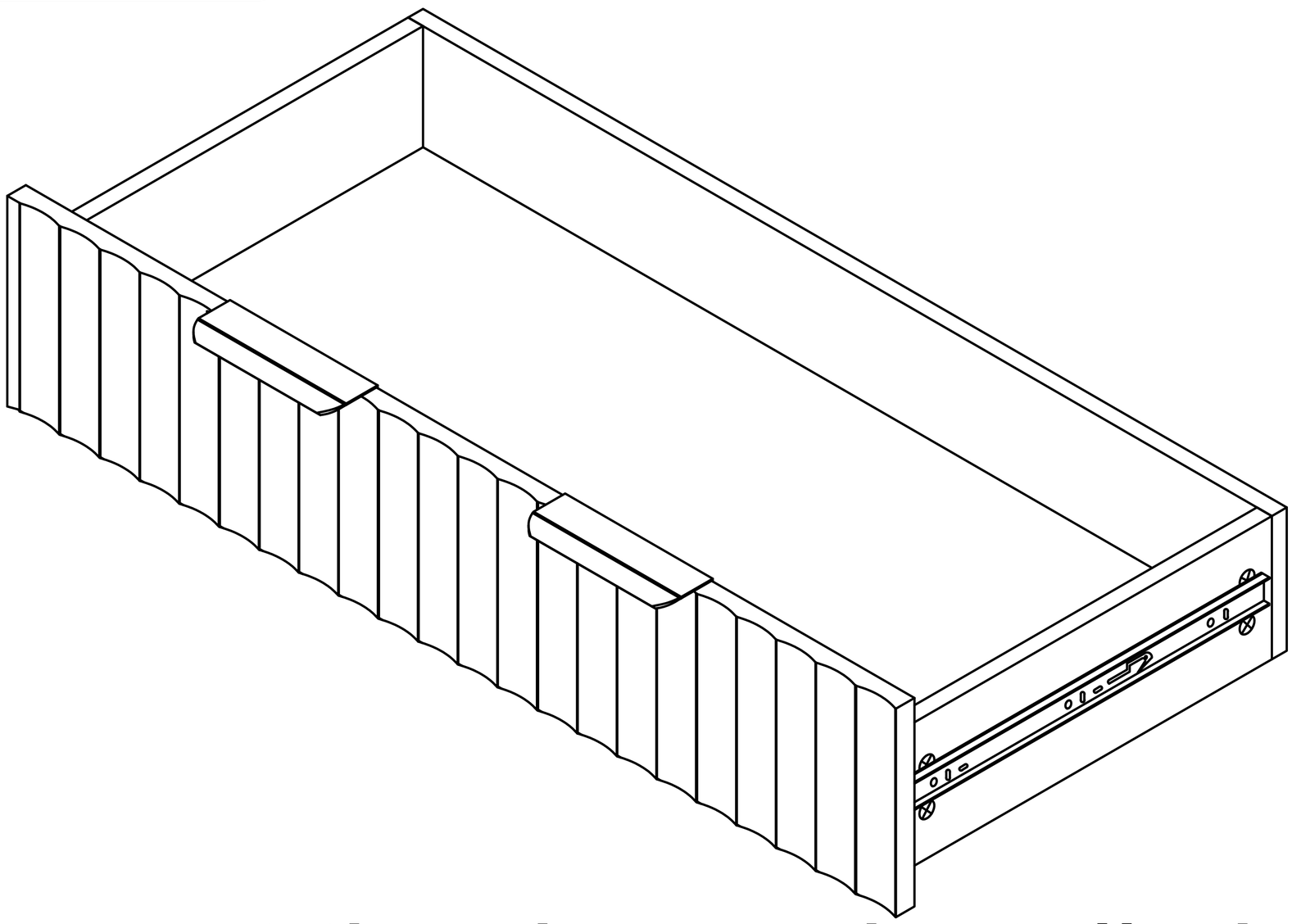

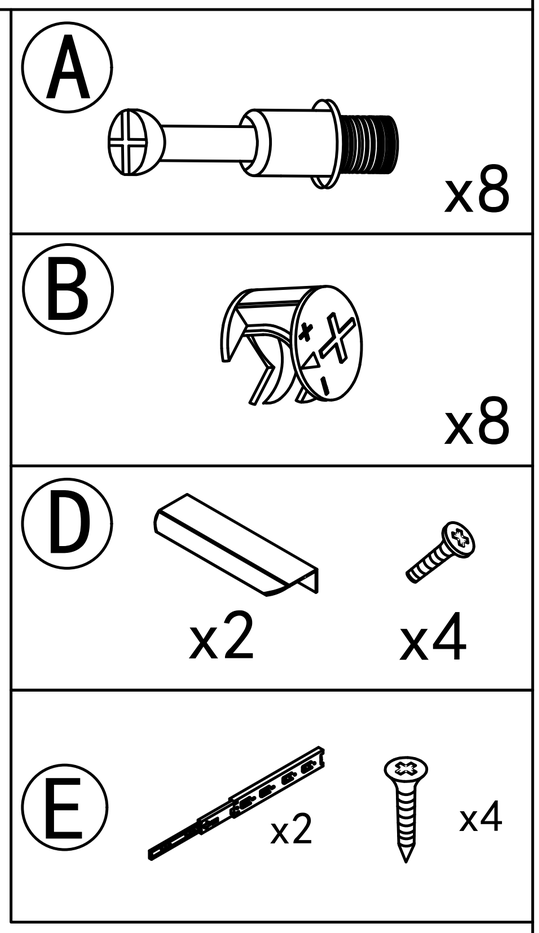

x2

Repeat the drawer installation steps

A		103pcs	B		103pcs	C		16pcs
E	4pcs	12pcs	F	4pcs	16pcs	G		4pcs
H	4pcs	16pcs	I		1pcs	J	1pcs	4pcs
O	1pcs	2pcs						

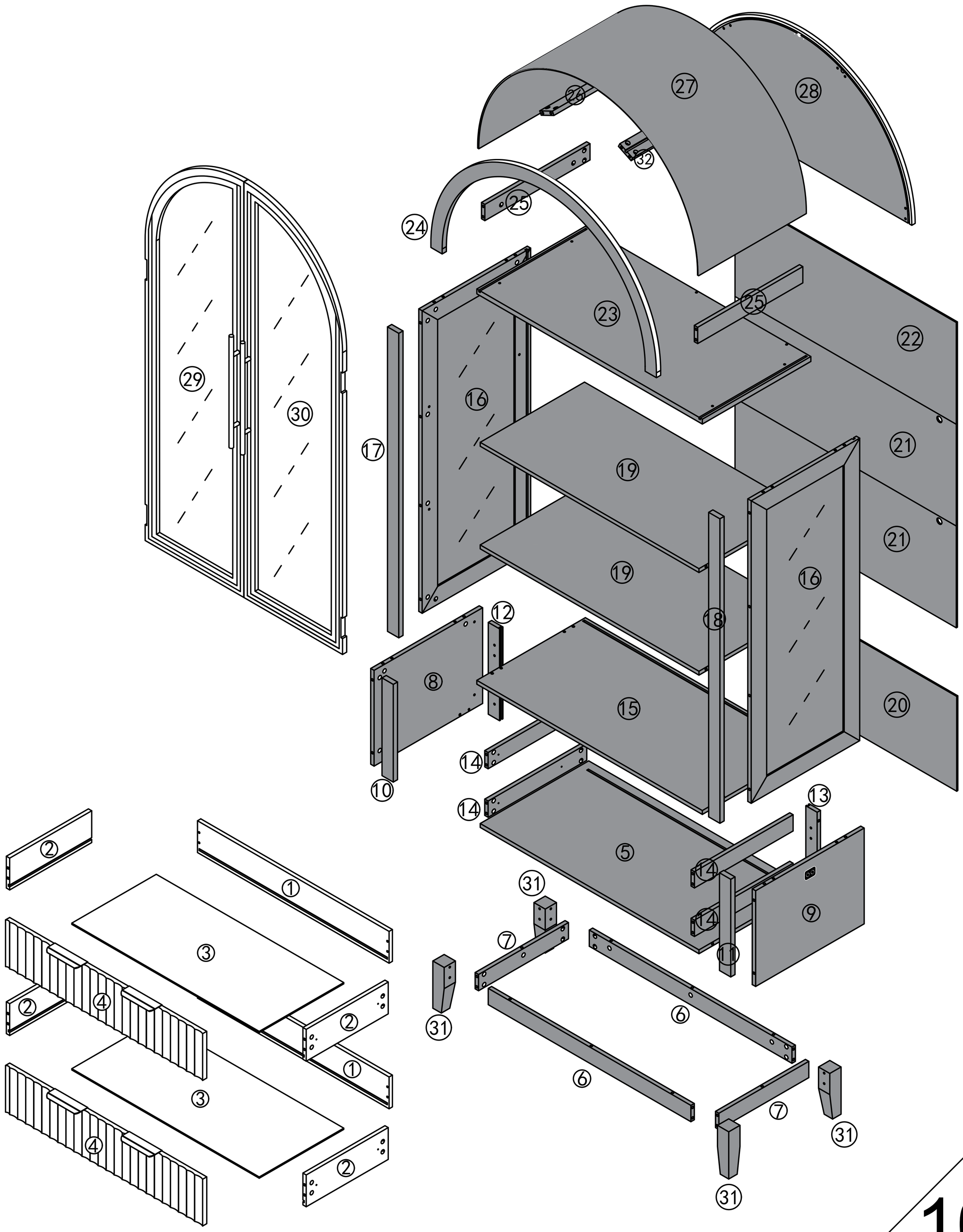

Step 8

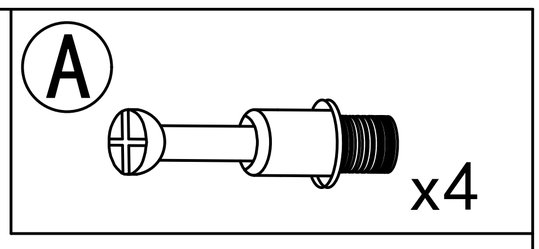

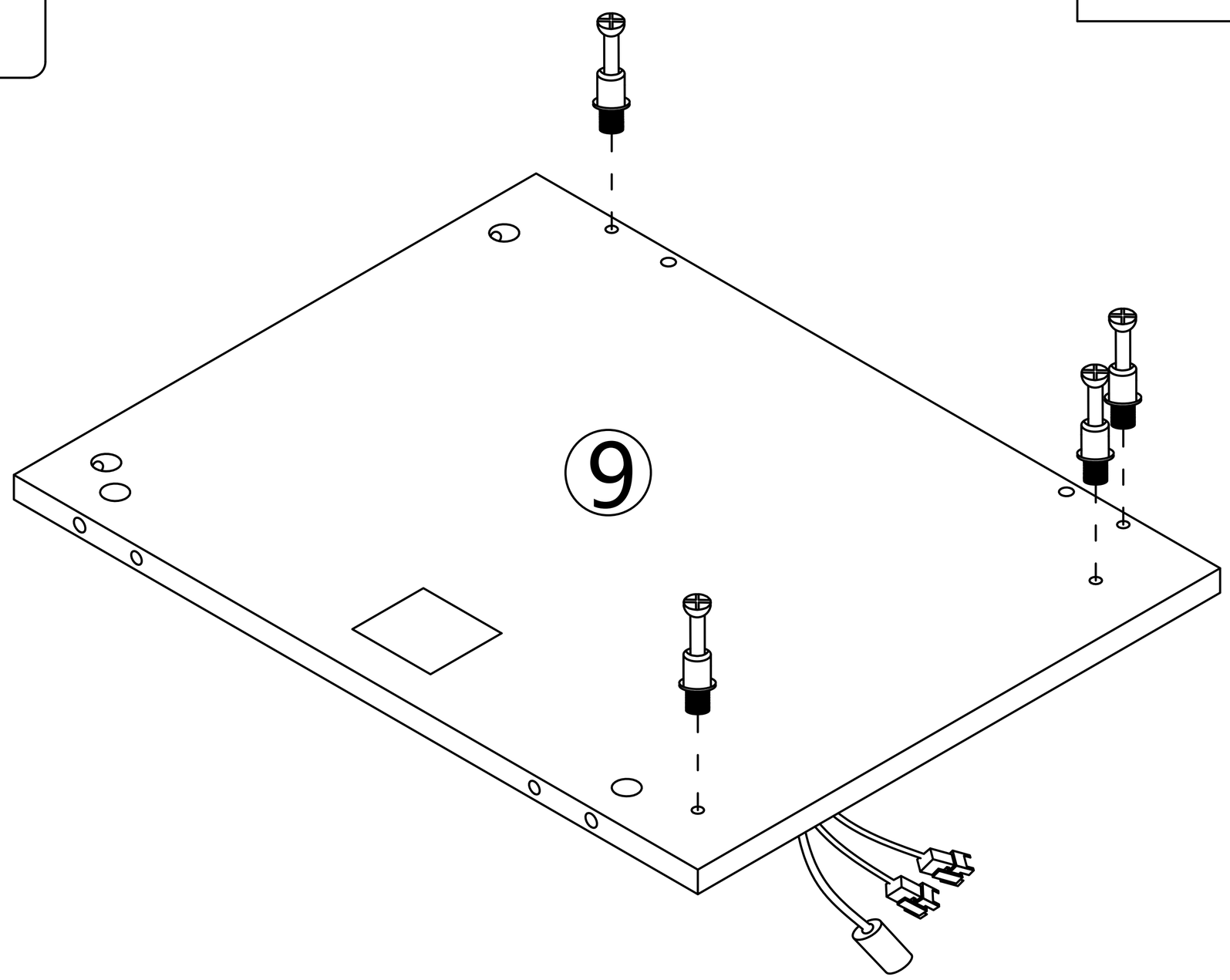

Step 9

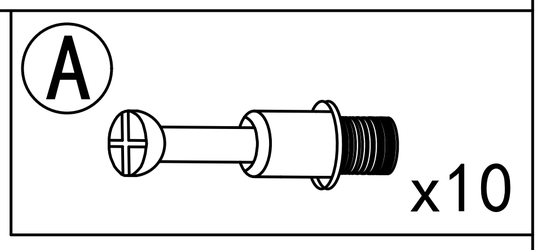

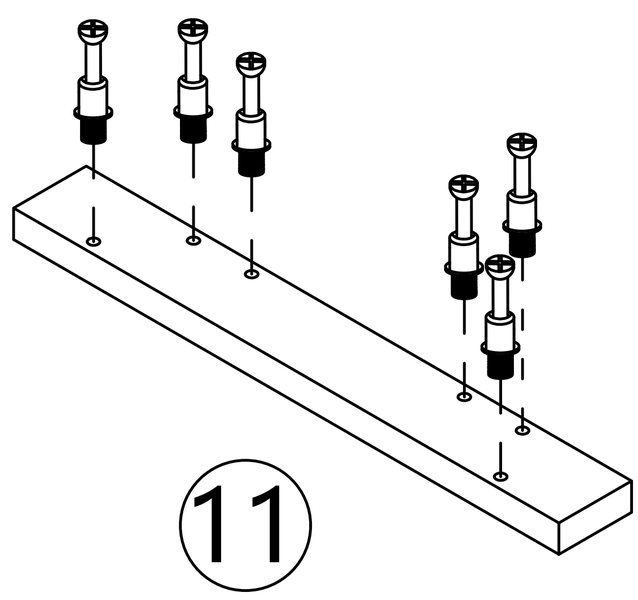

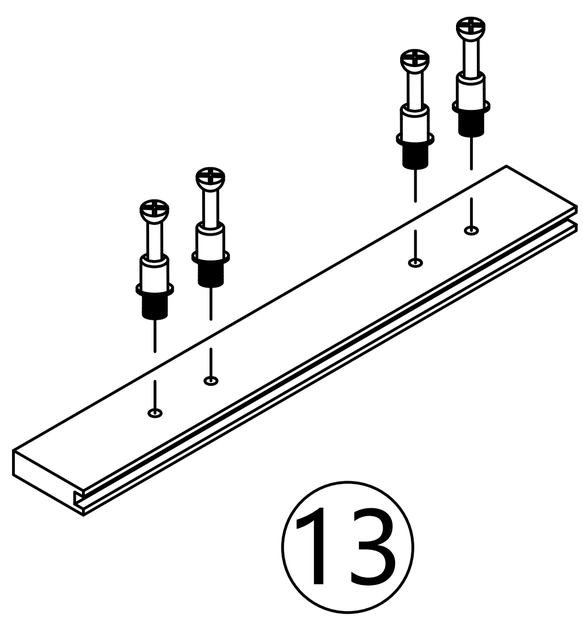

Step 10

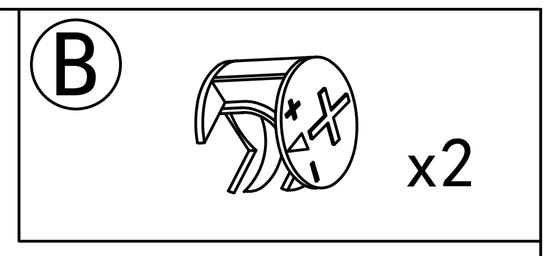

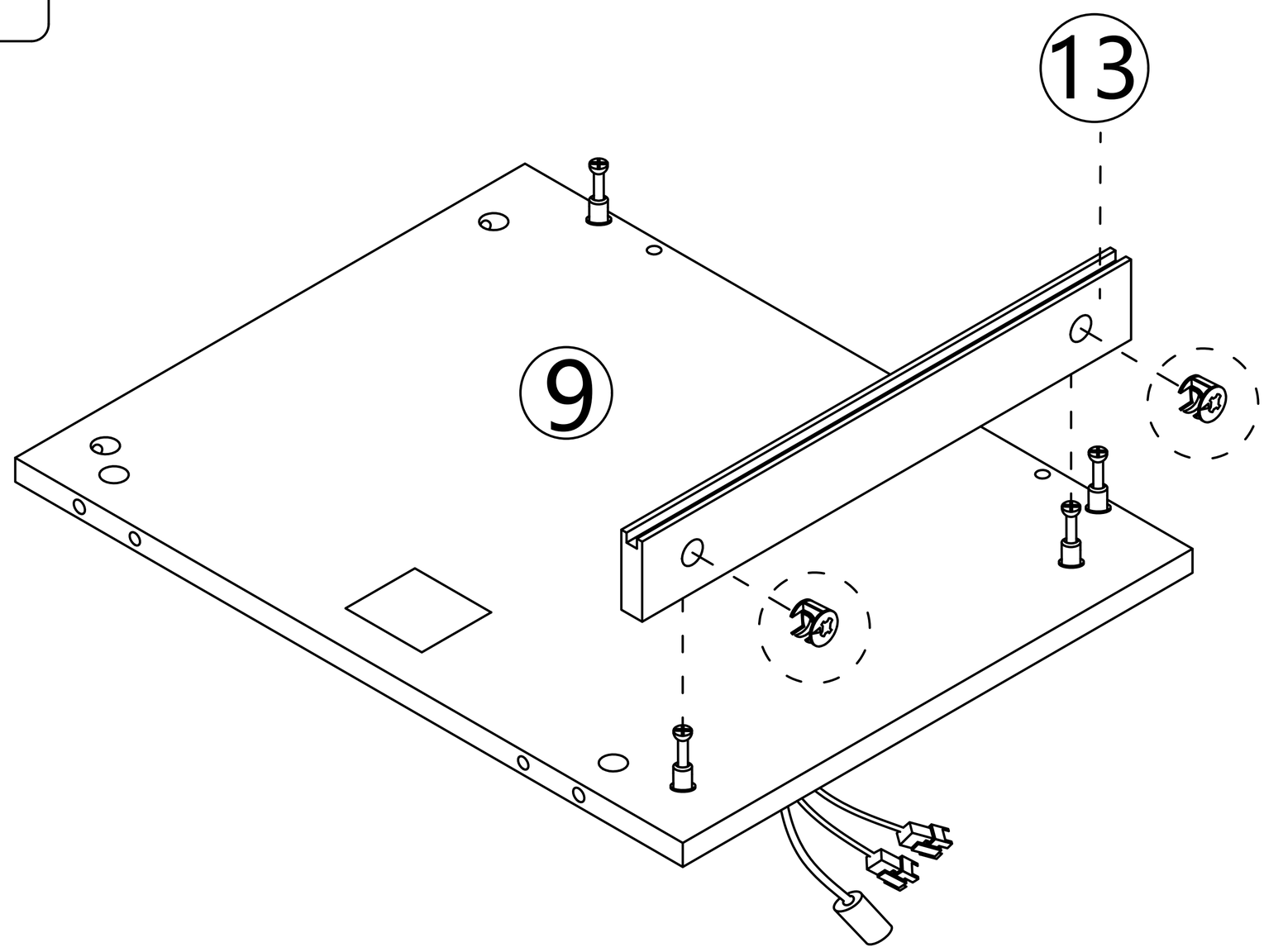

Step 11

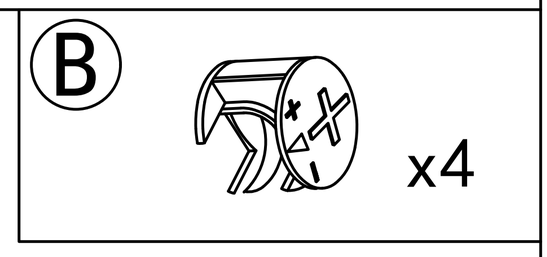

Note: The guiding hole here is relatively close to the edge.

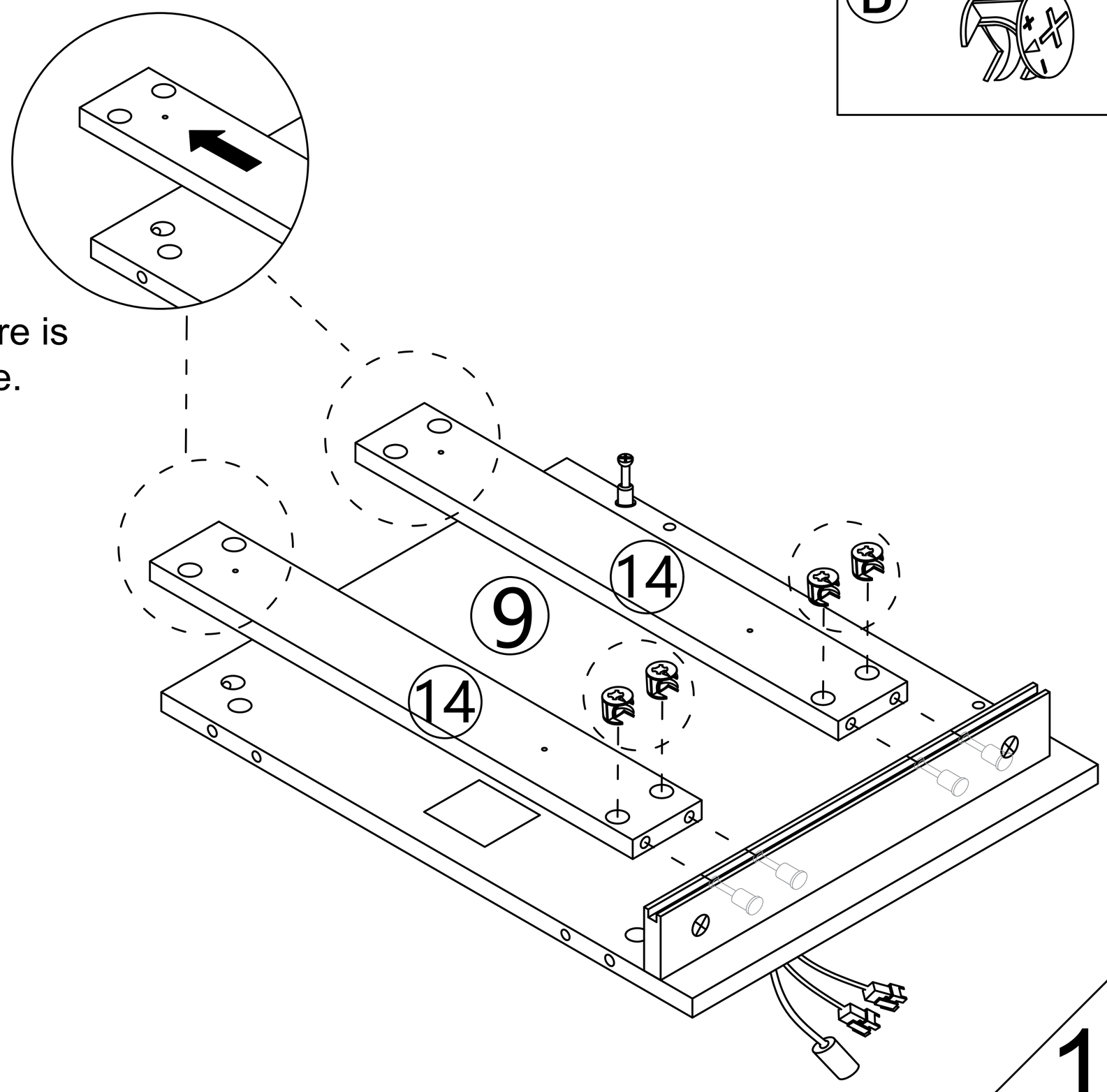

Step 12

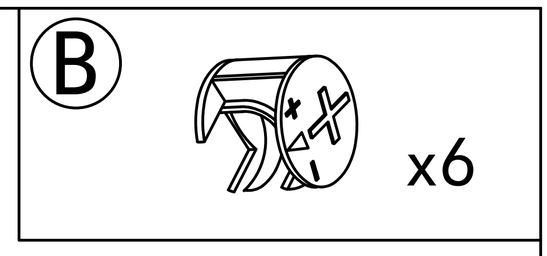

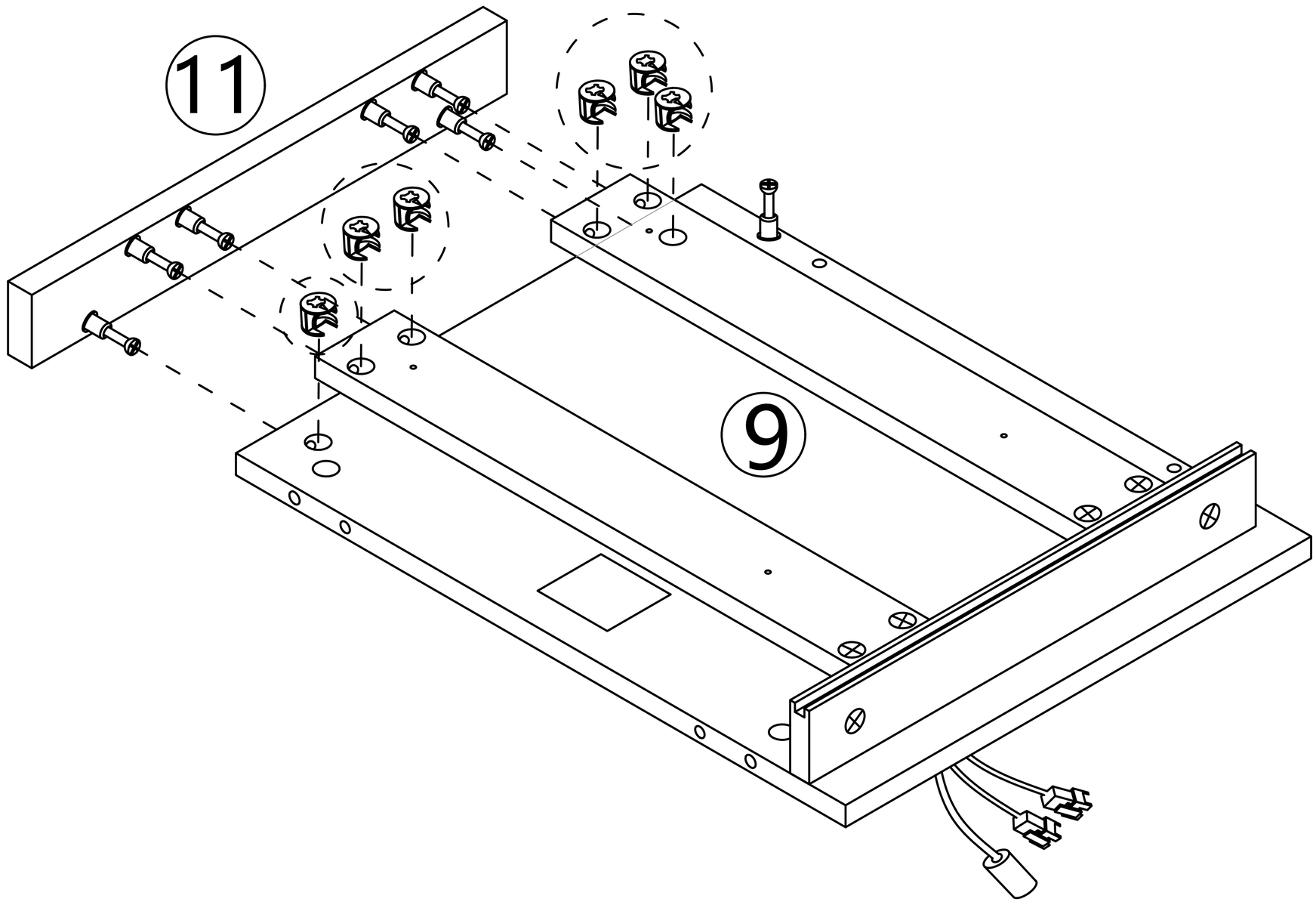

Step 13

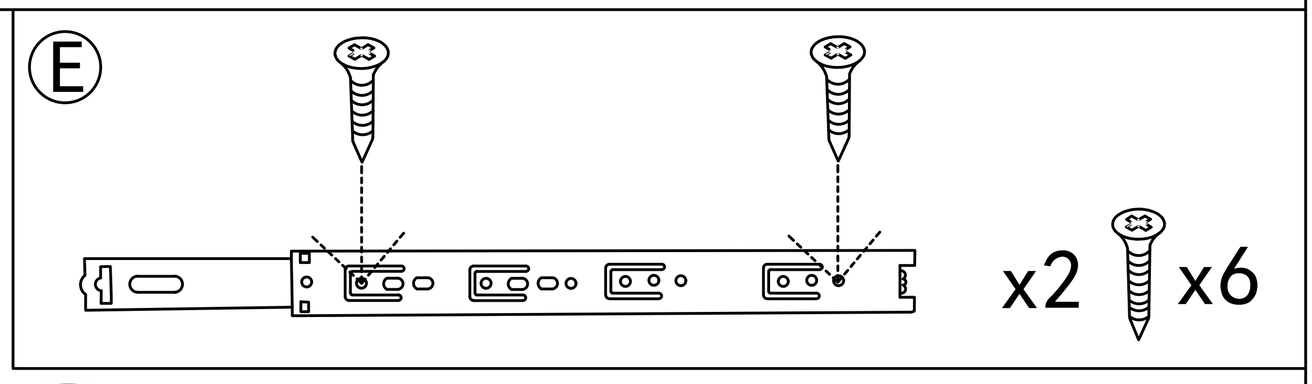

This hole is for strengthening fixed hole customers can choose to install according to their needs.

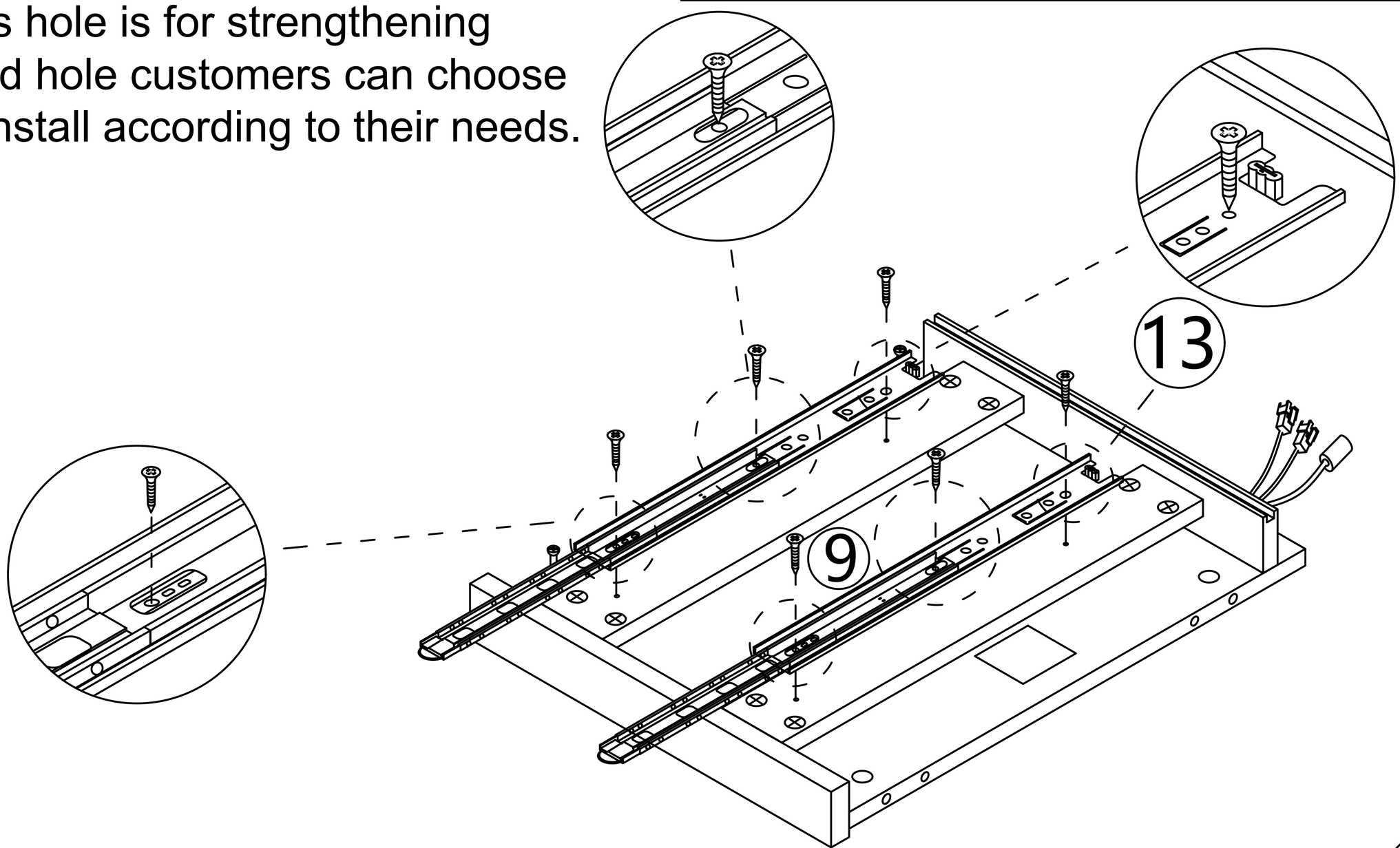

Step 14

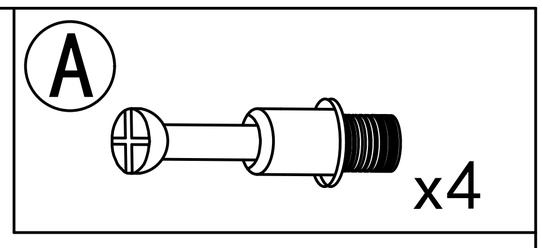

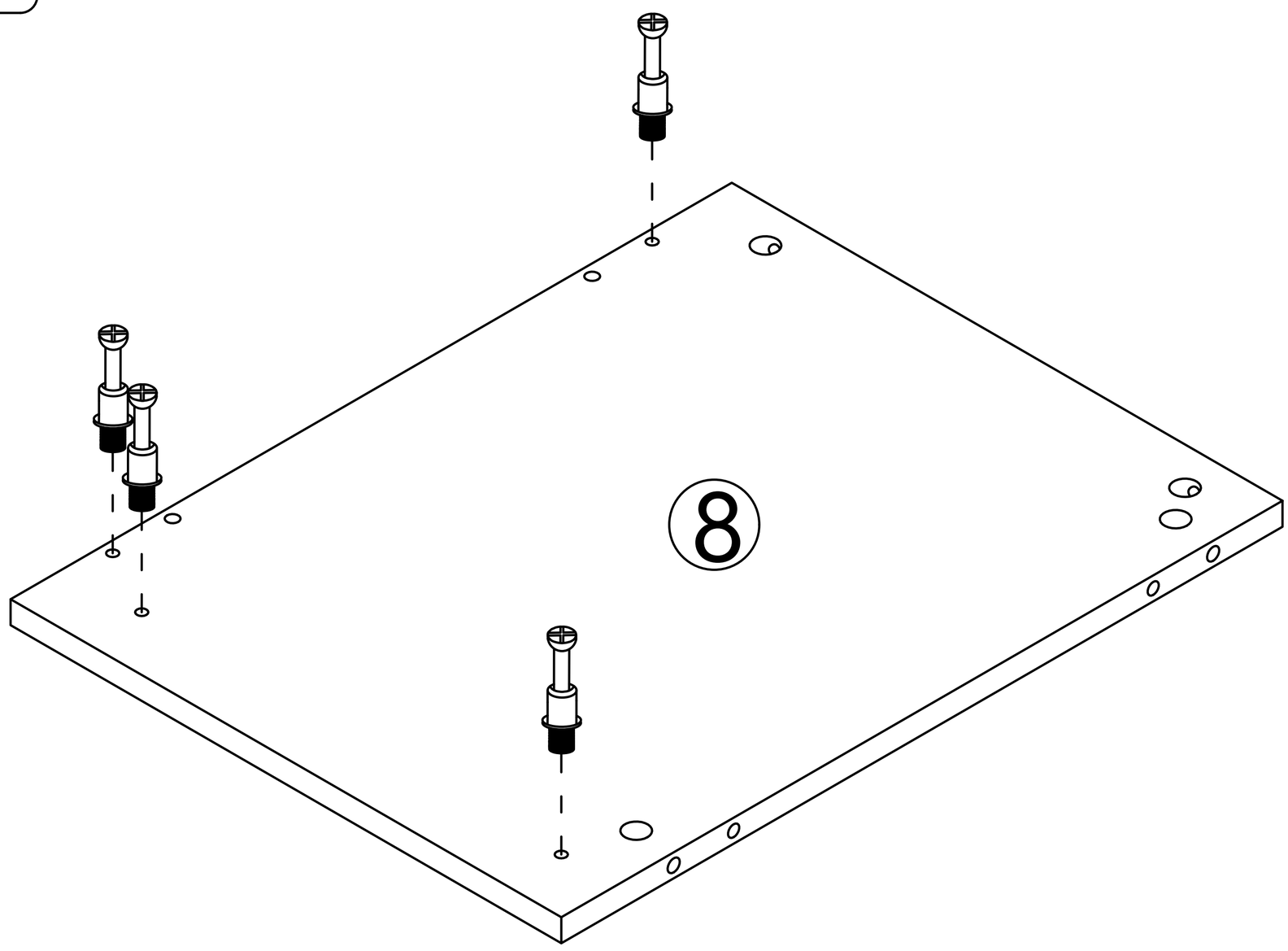

Step 15

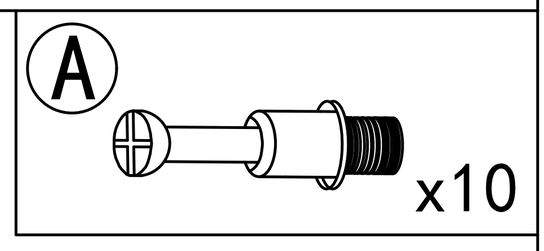

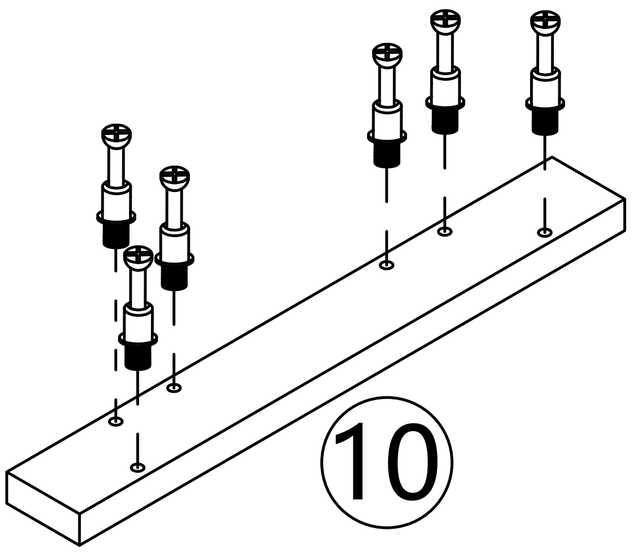

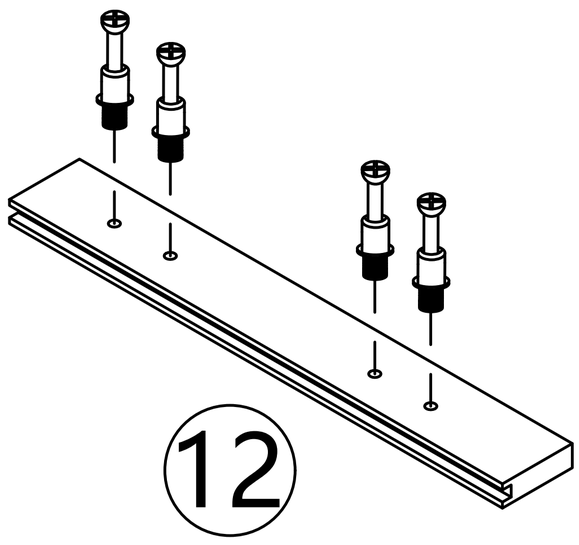

Step 16

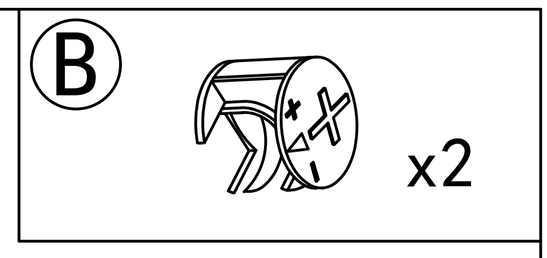

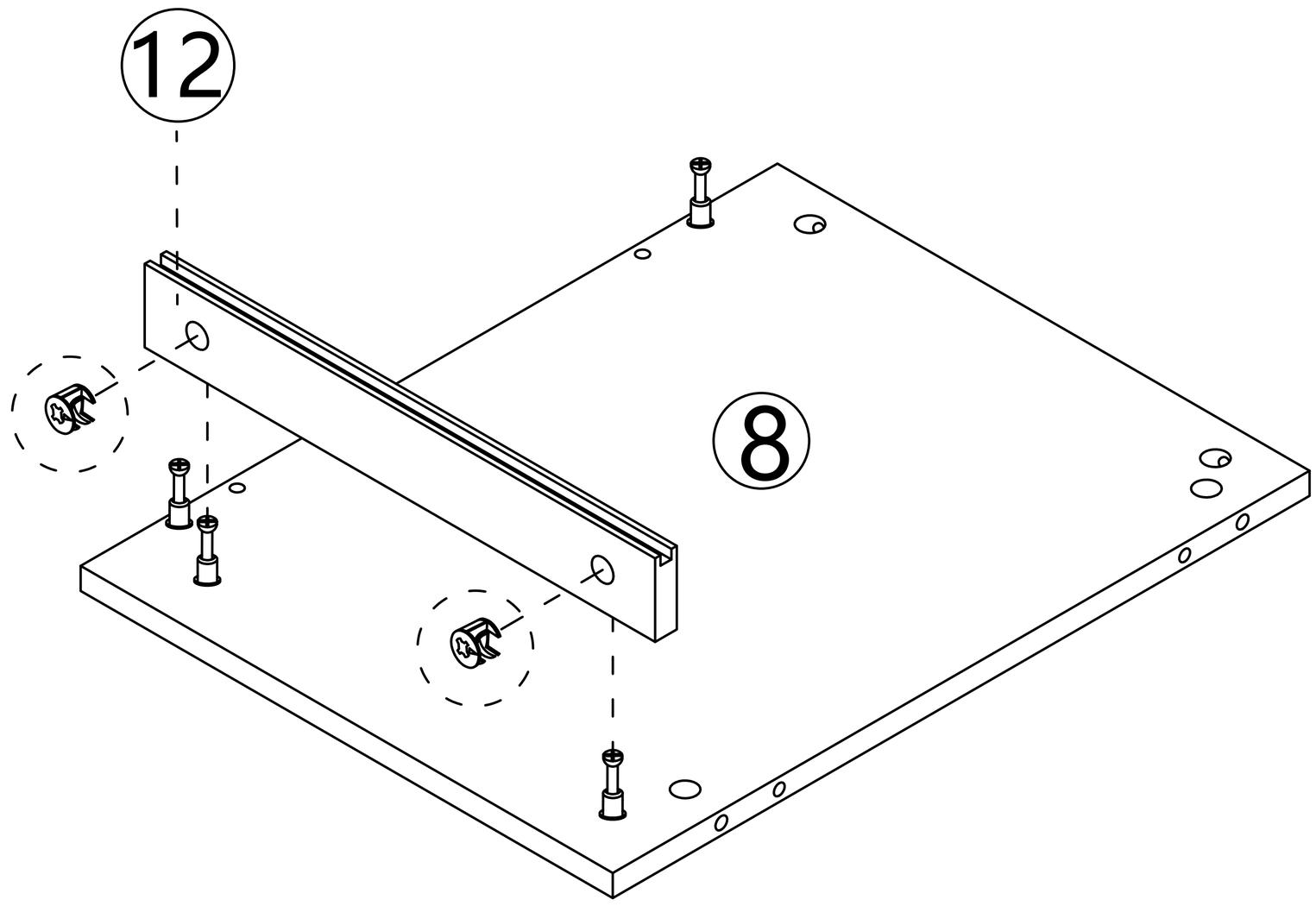

Step 17

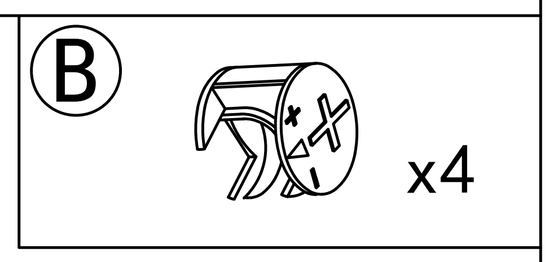

Note: The guiding hole here is relatively close to the edge.

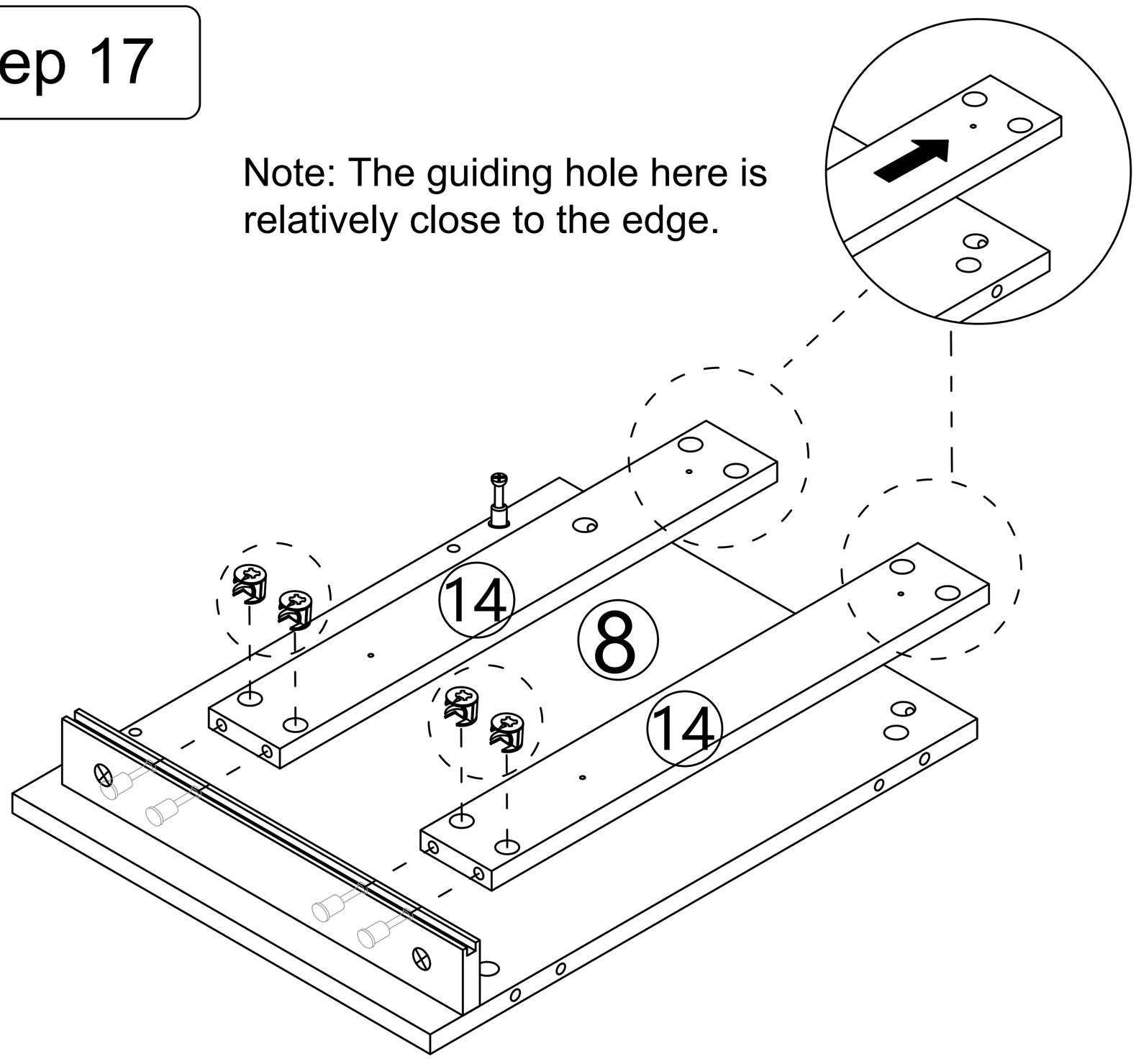

Step 18

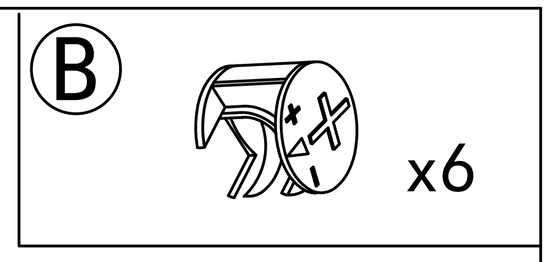

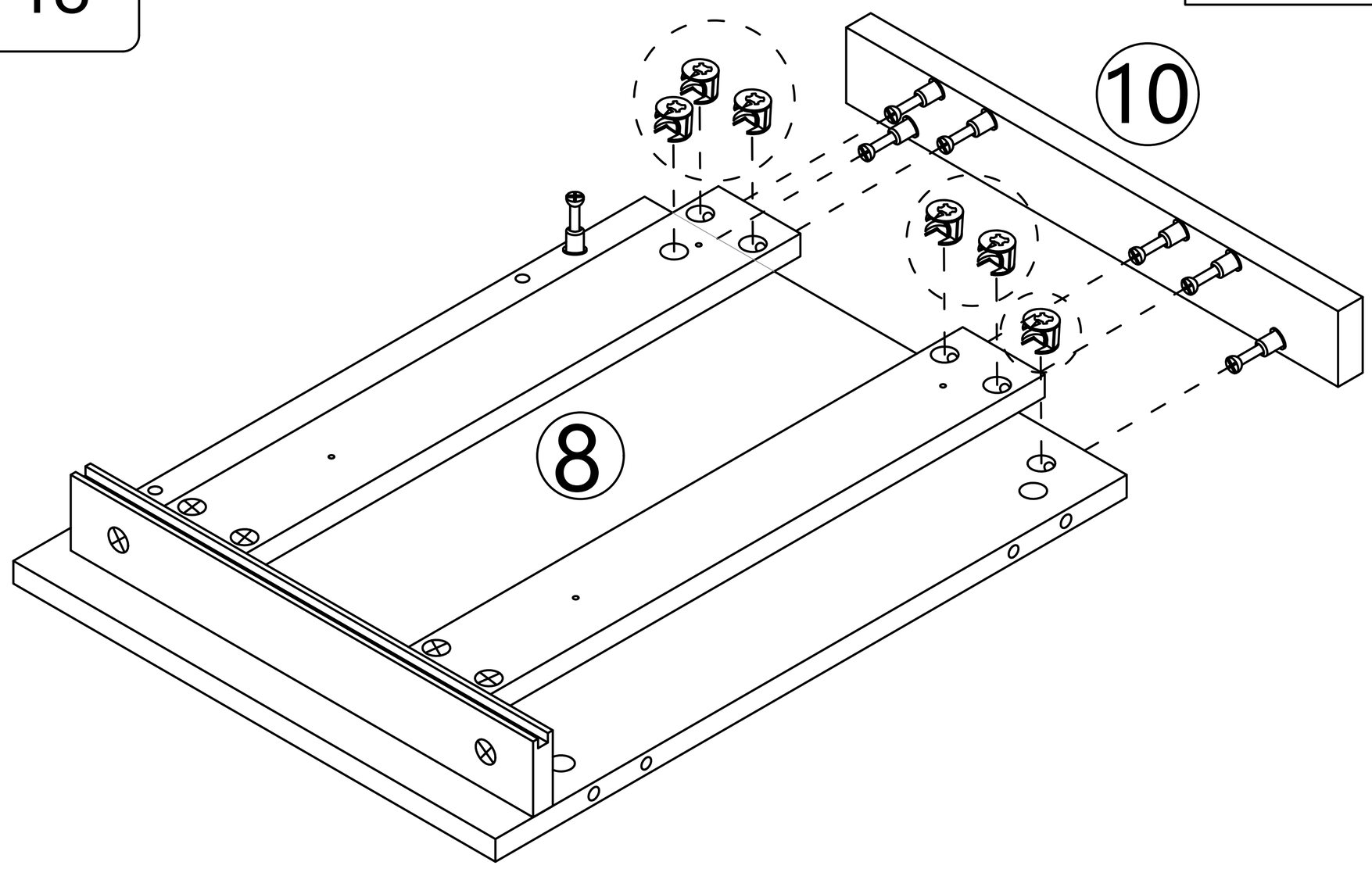

Step 19

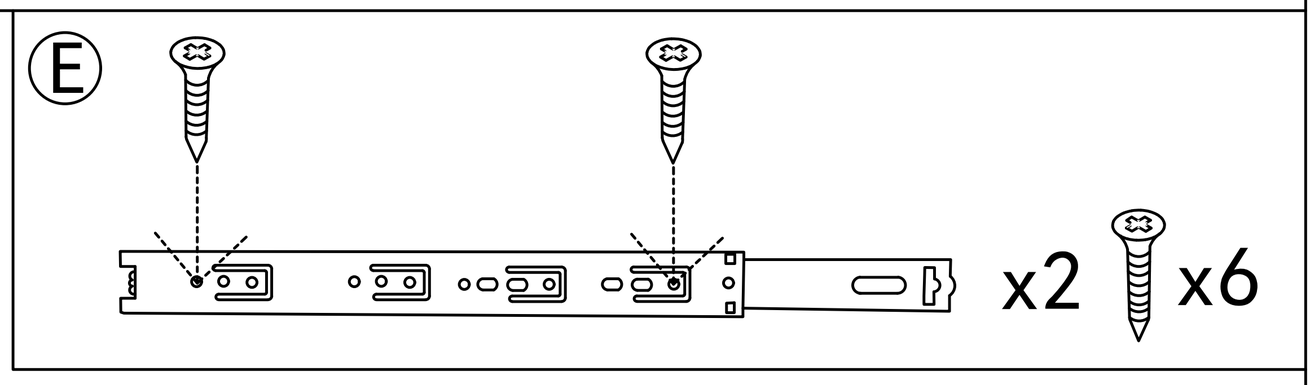

This hole is for strengthening fixed hole customers can choose to install according to their needs.

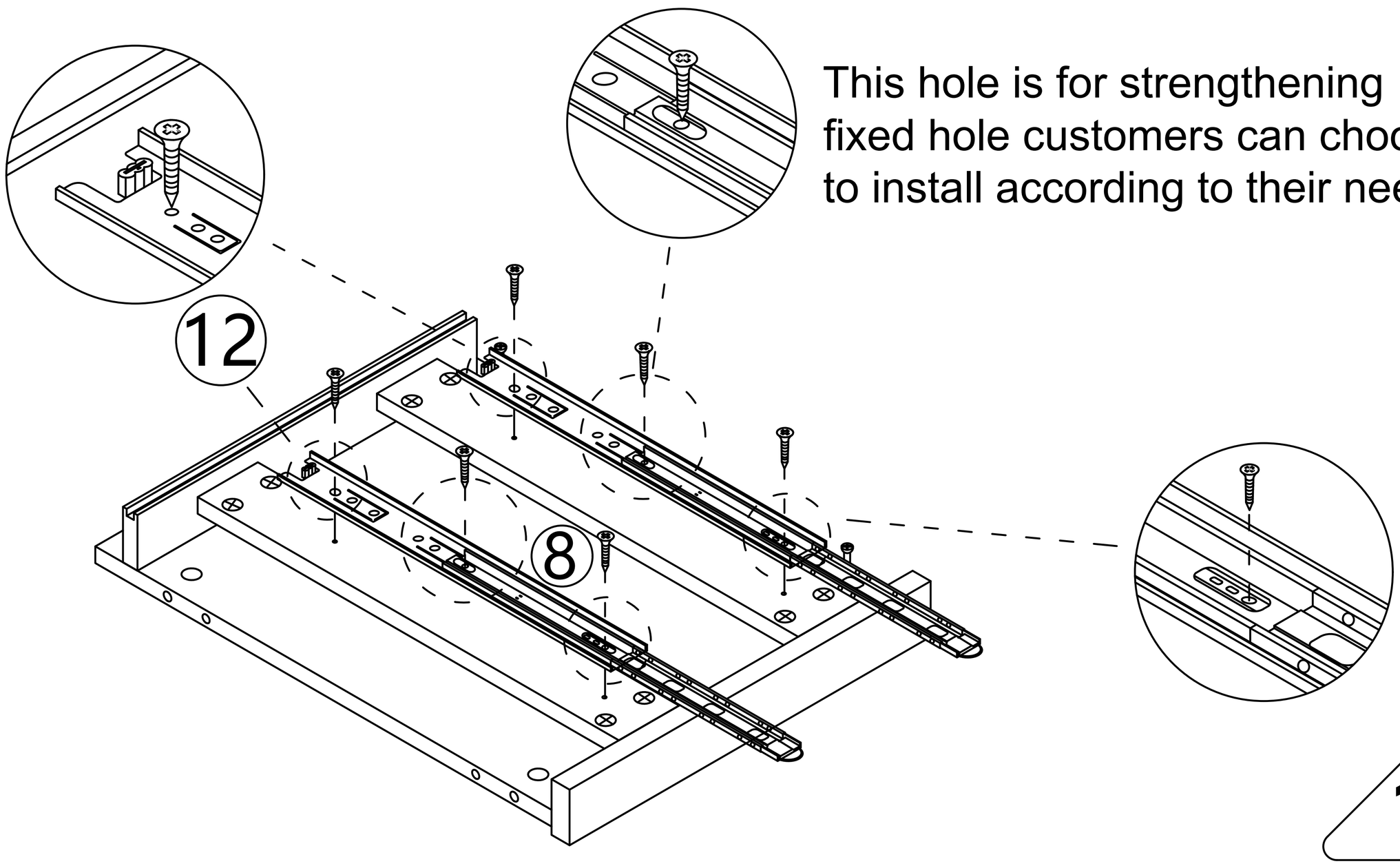

Step 20

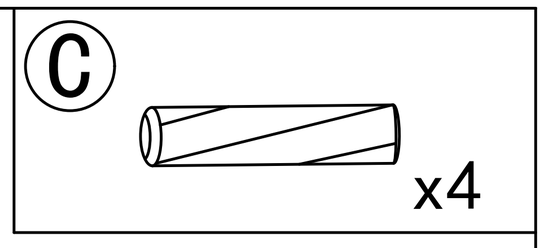

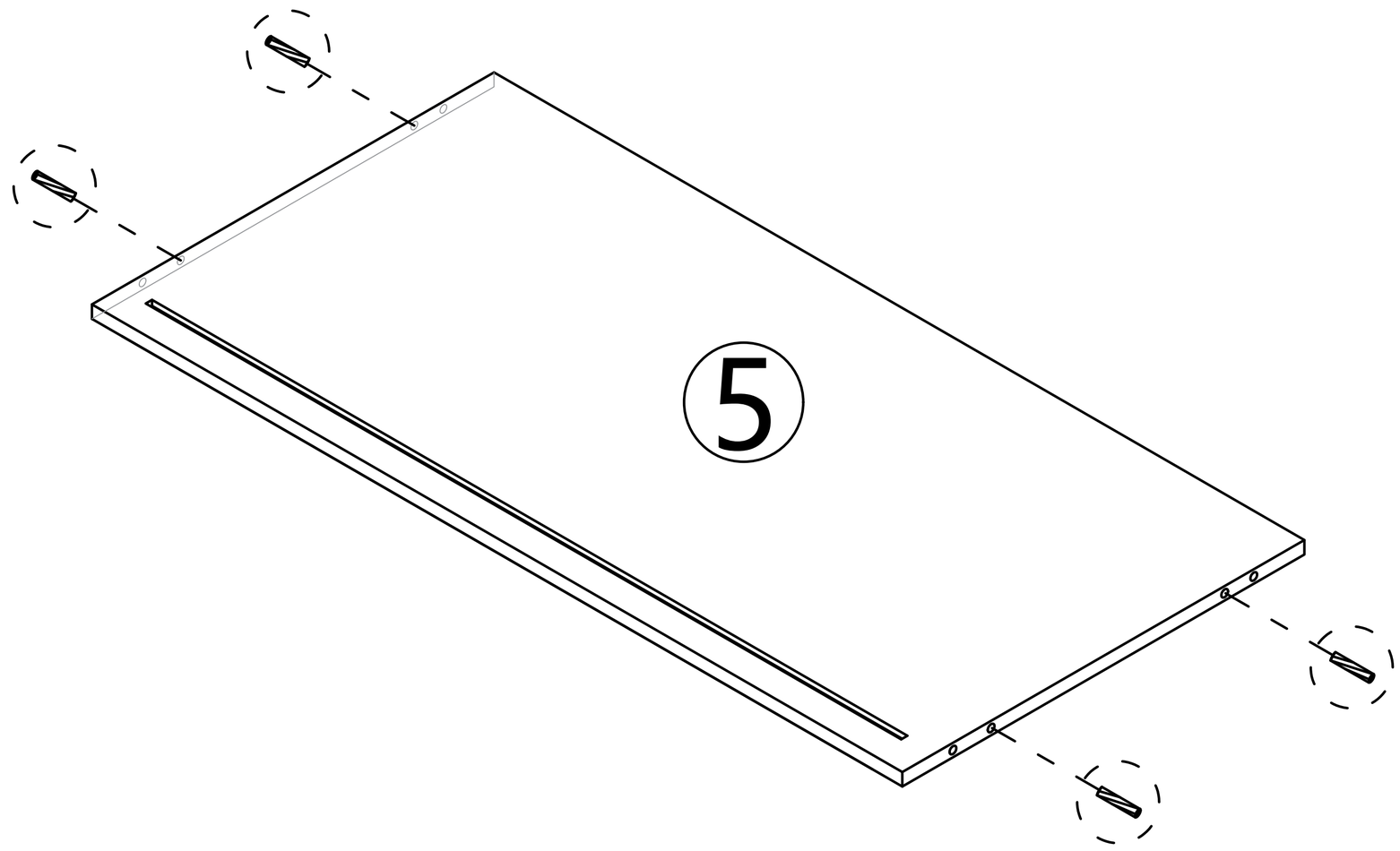

Step 21

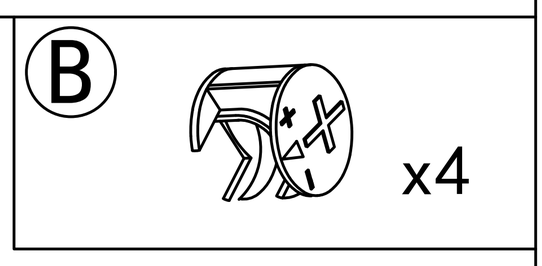

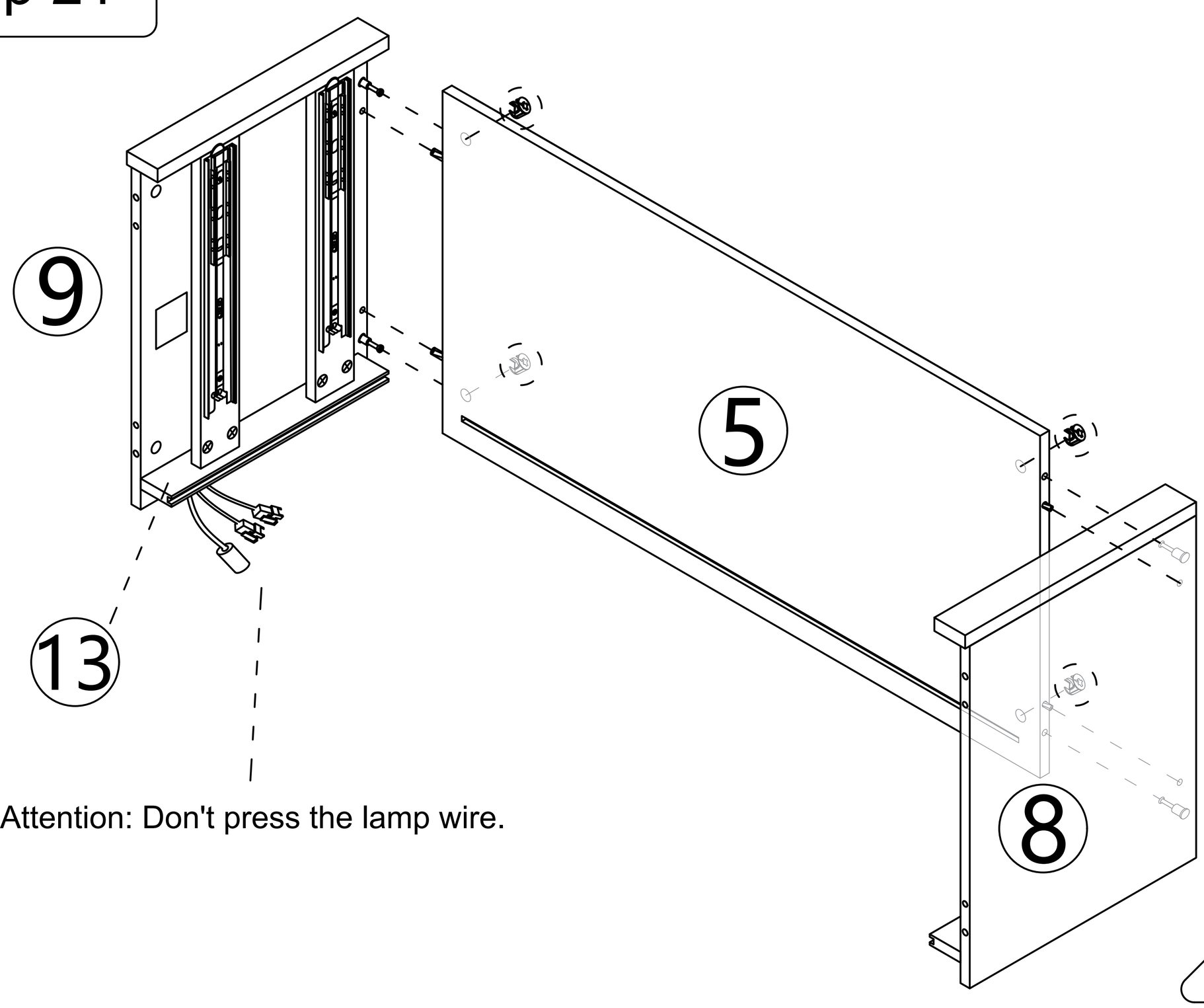

Attention: Don't press the lamp wire.

Step 22

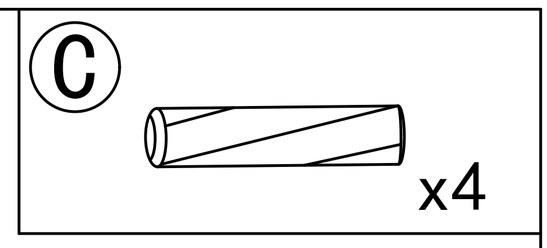

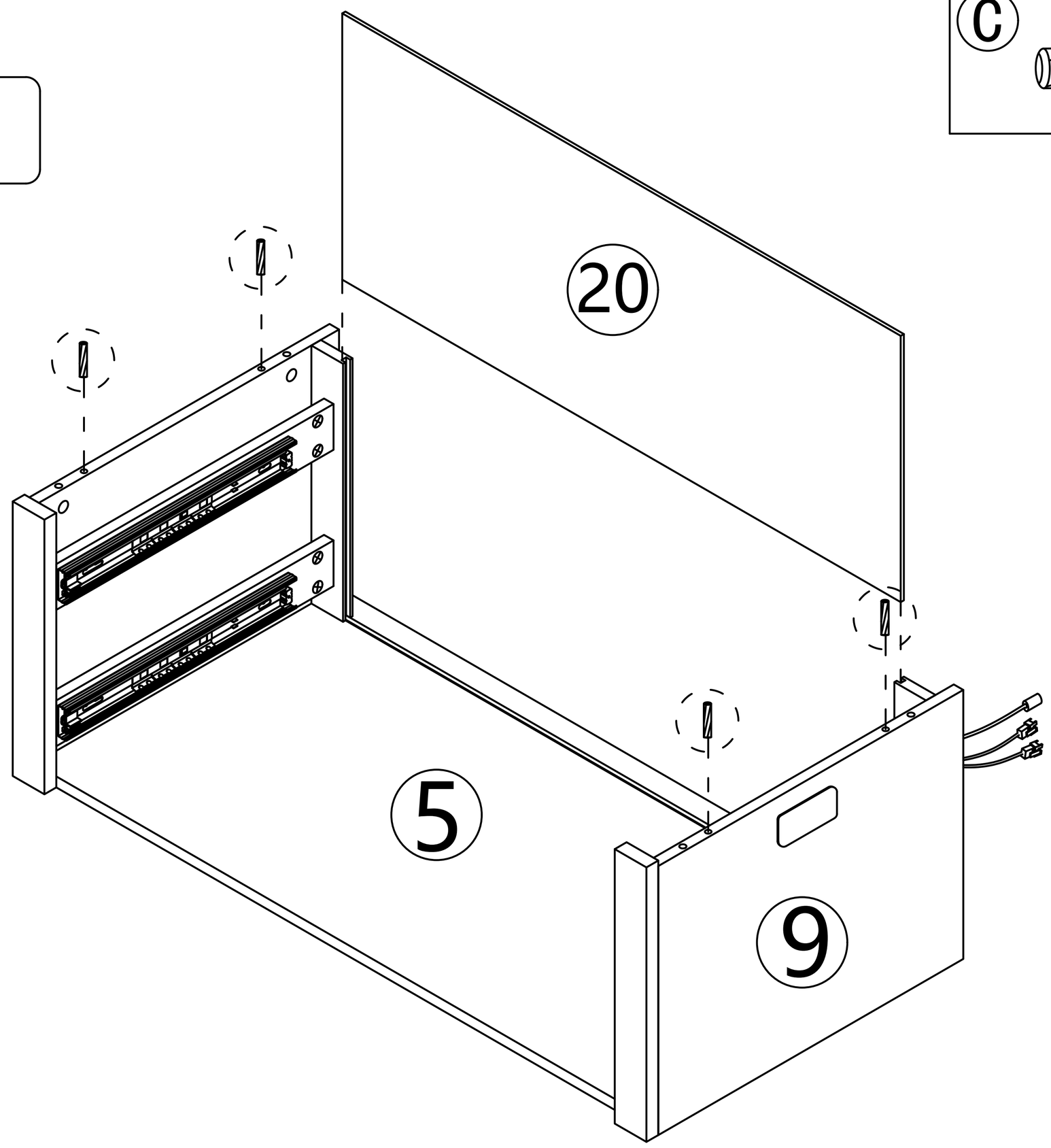

Step 23

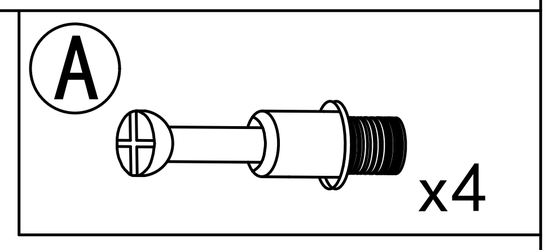

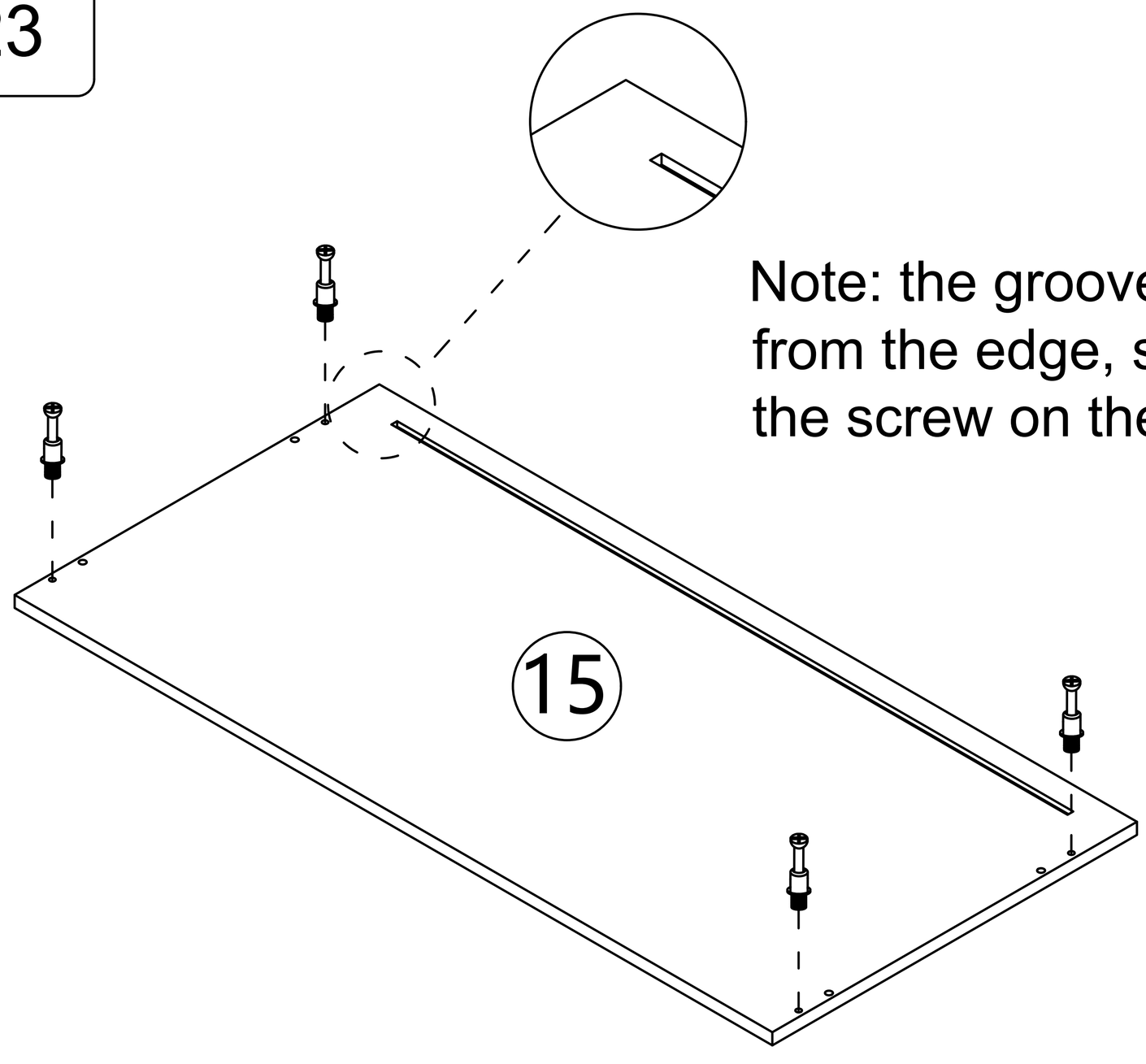

Note: the groove here is far from the edge, so don't install the screw on the wrong side.

Step 24

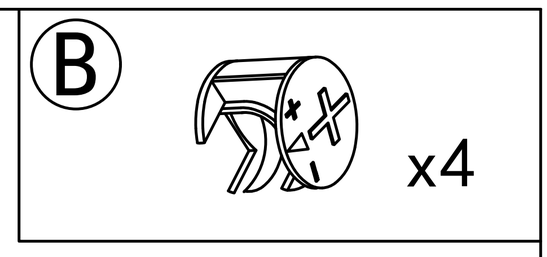

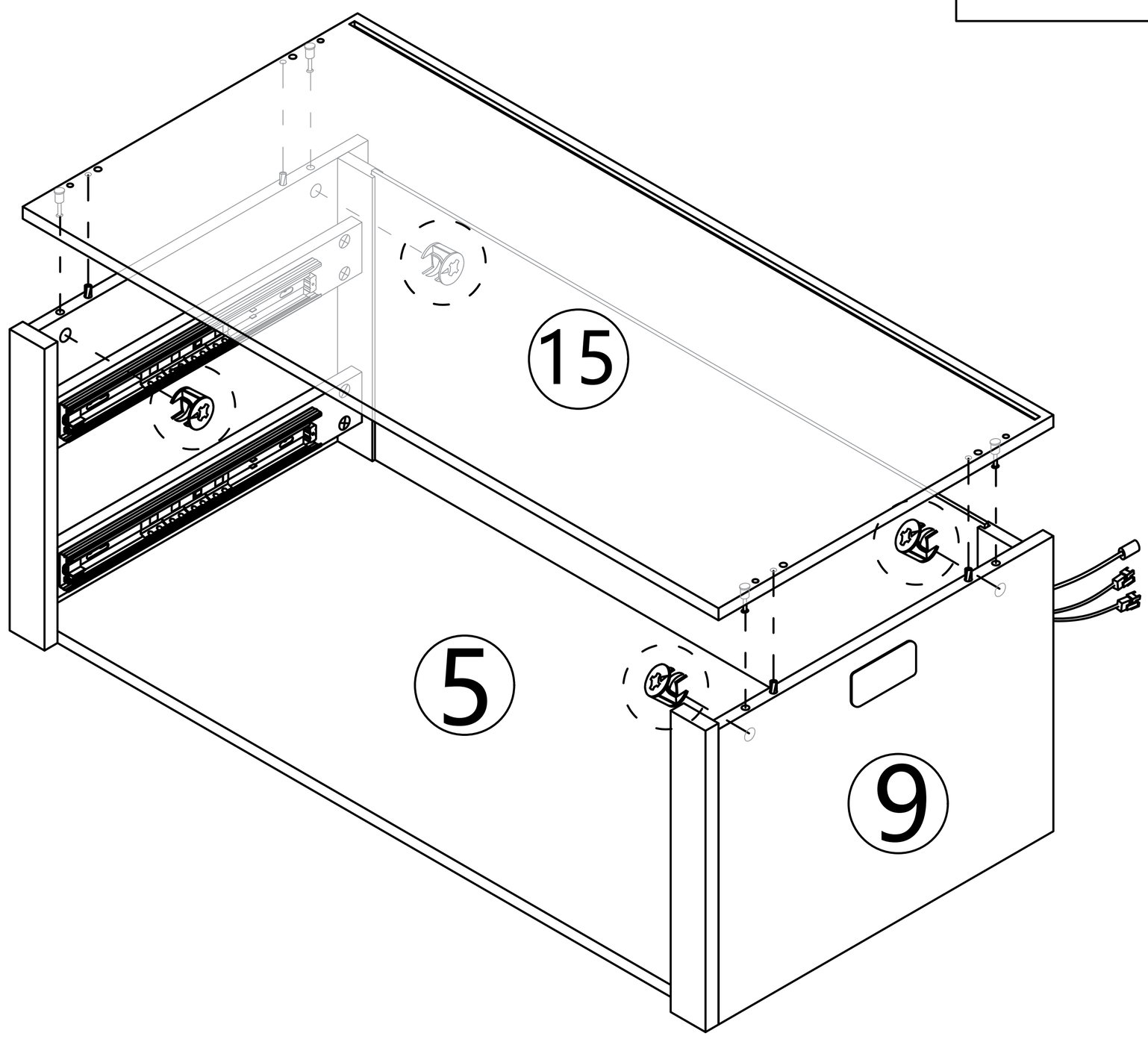

Step 25

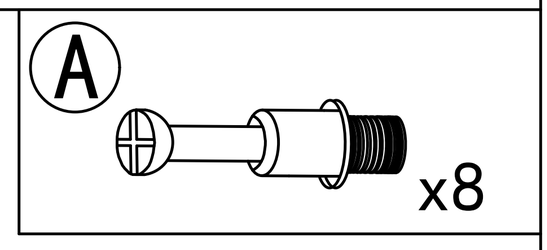

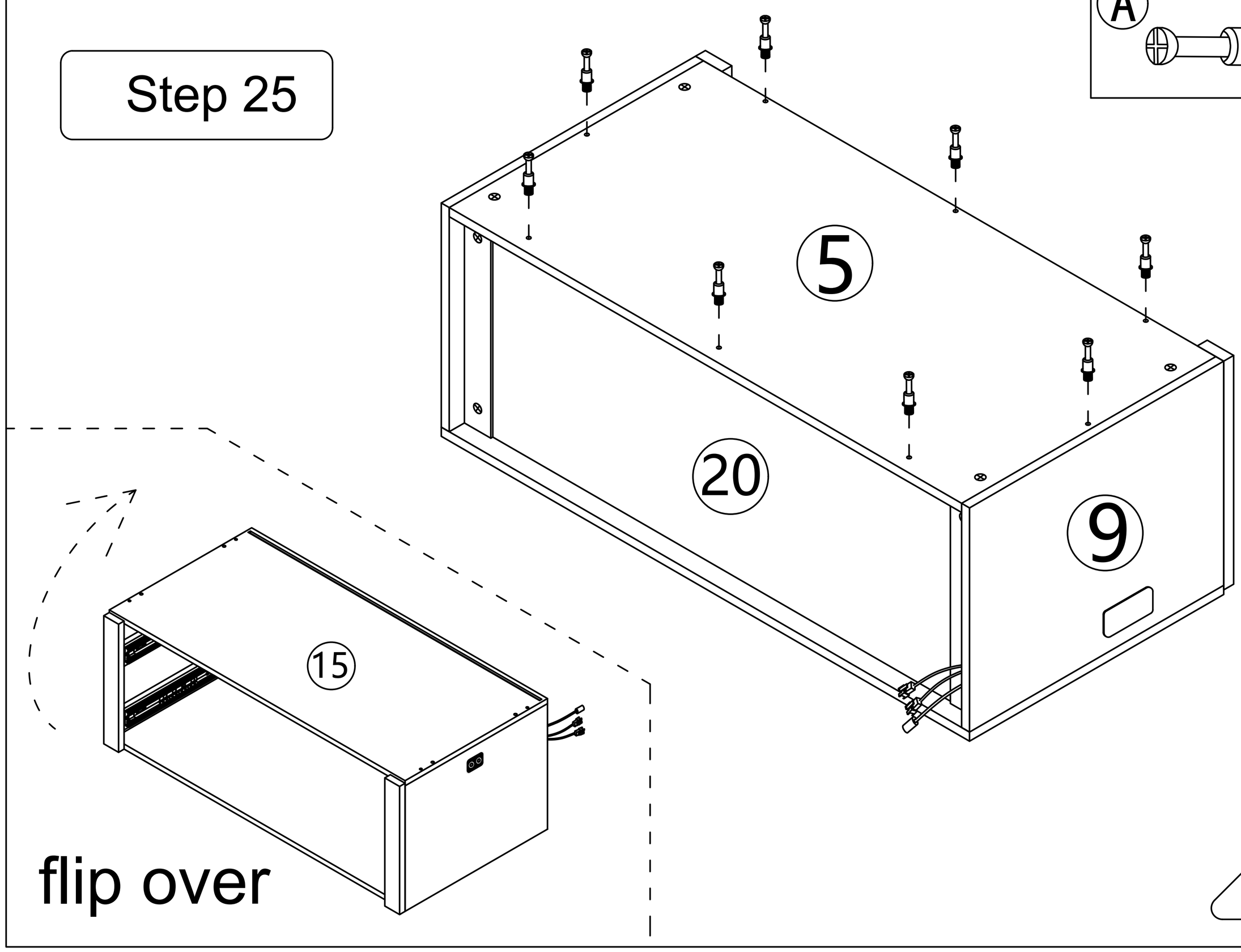

Step 26

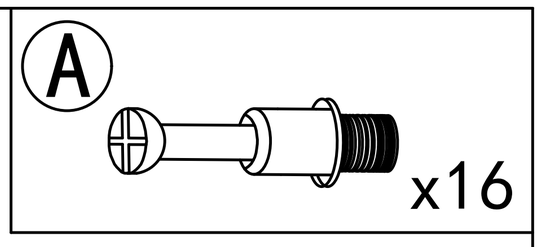

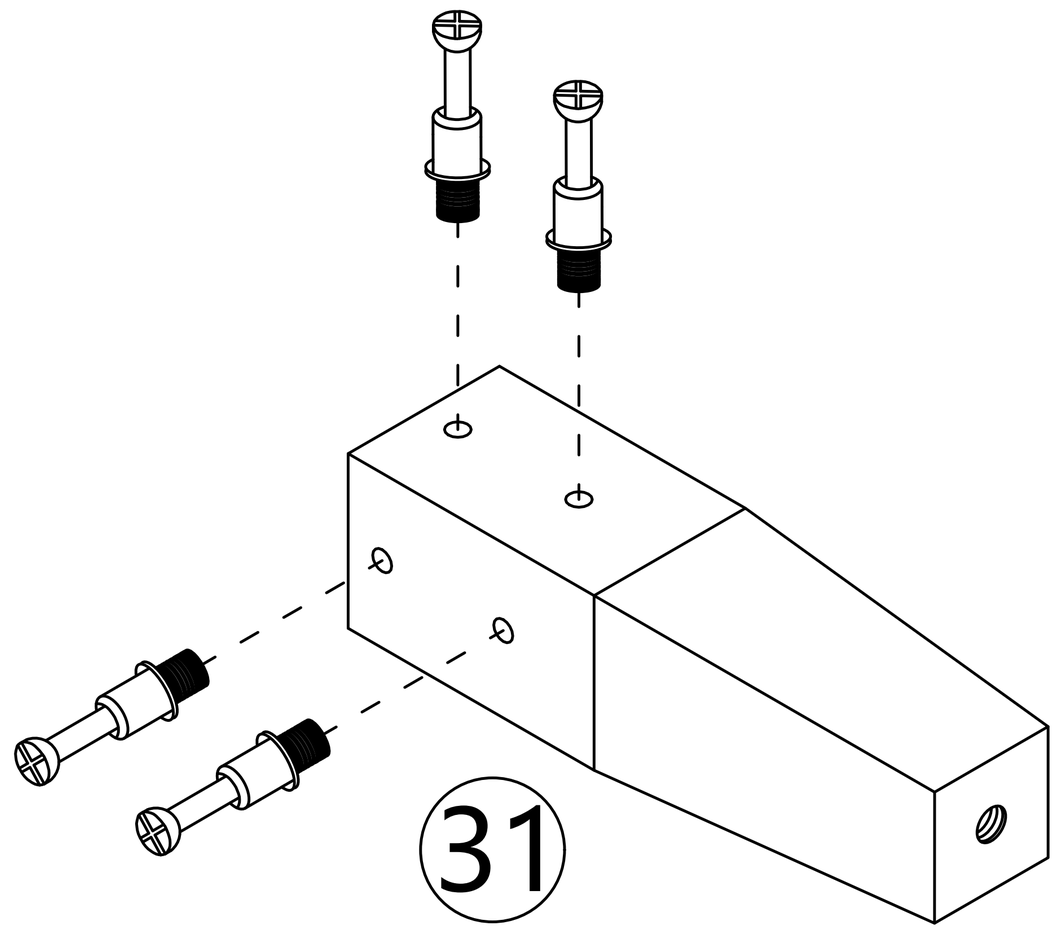

31 x4

Step 27

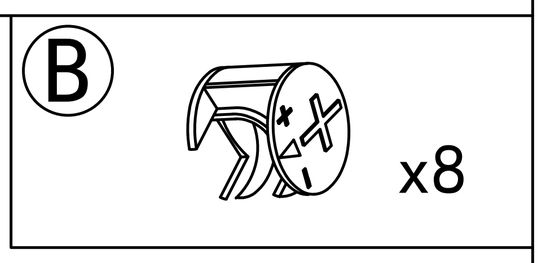

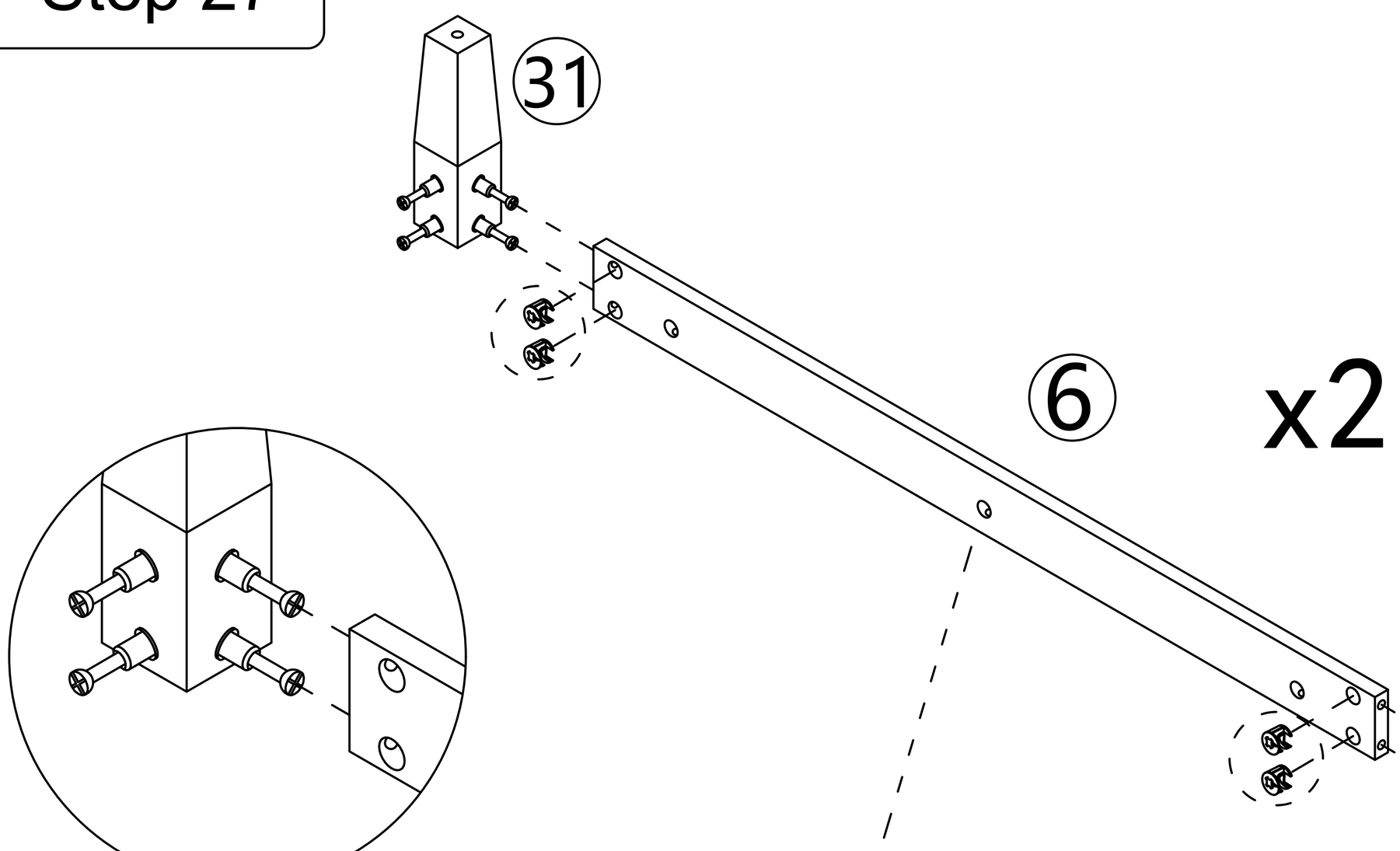

Note: the hole of No.6 plate faces downwards.

Step 28

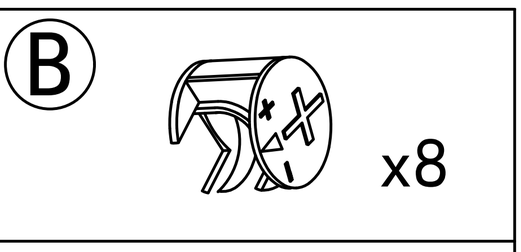

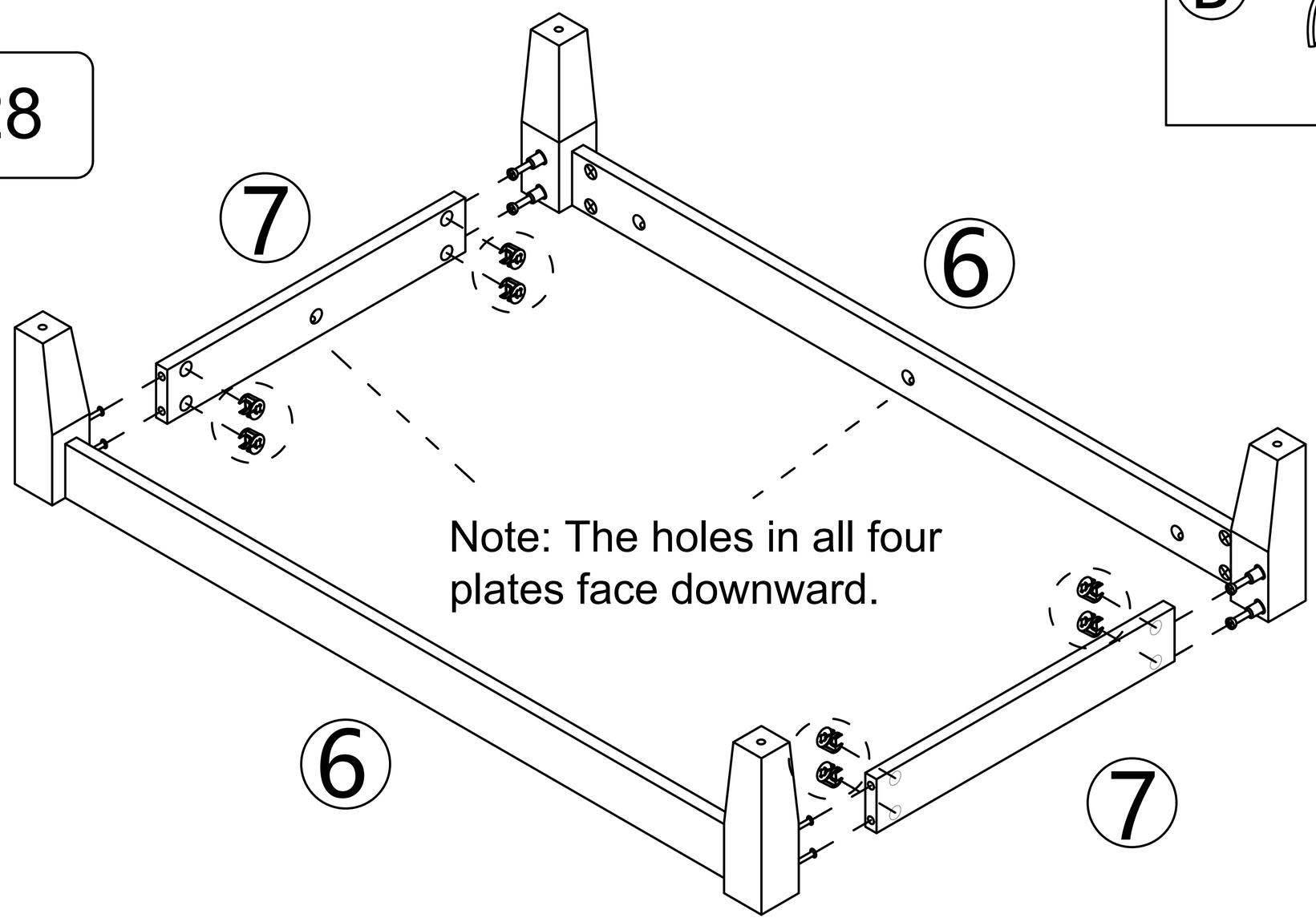

Step 29

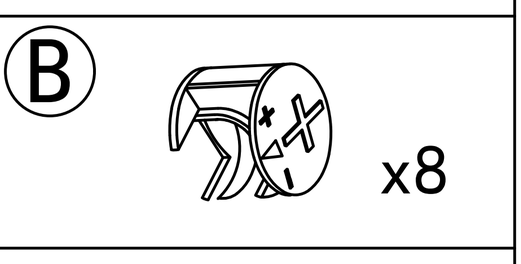

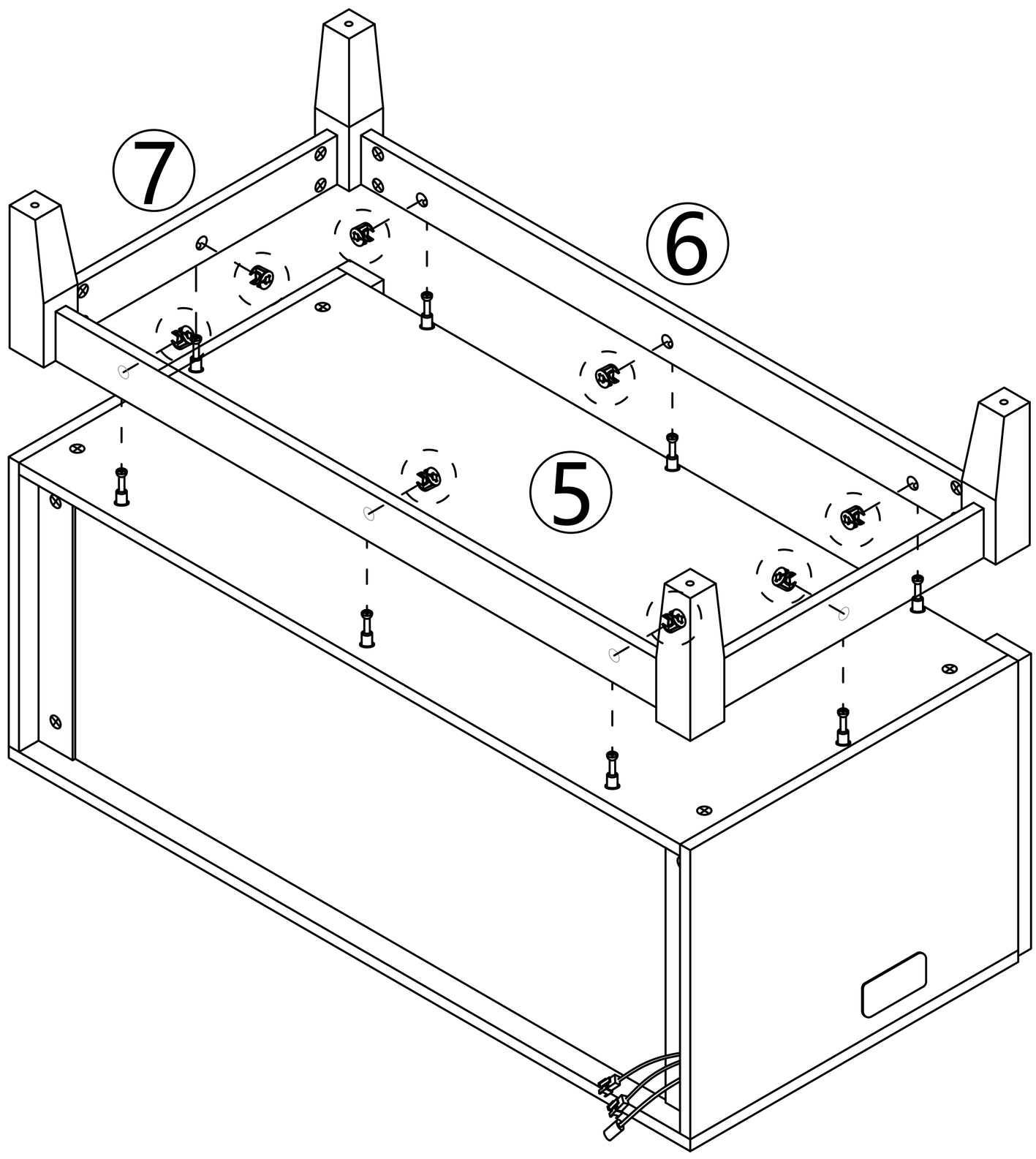

Step 30

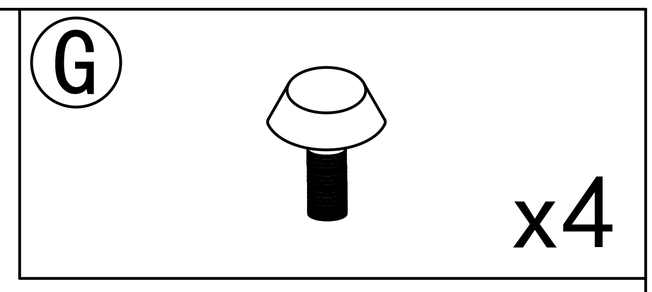

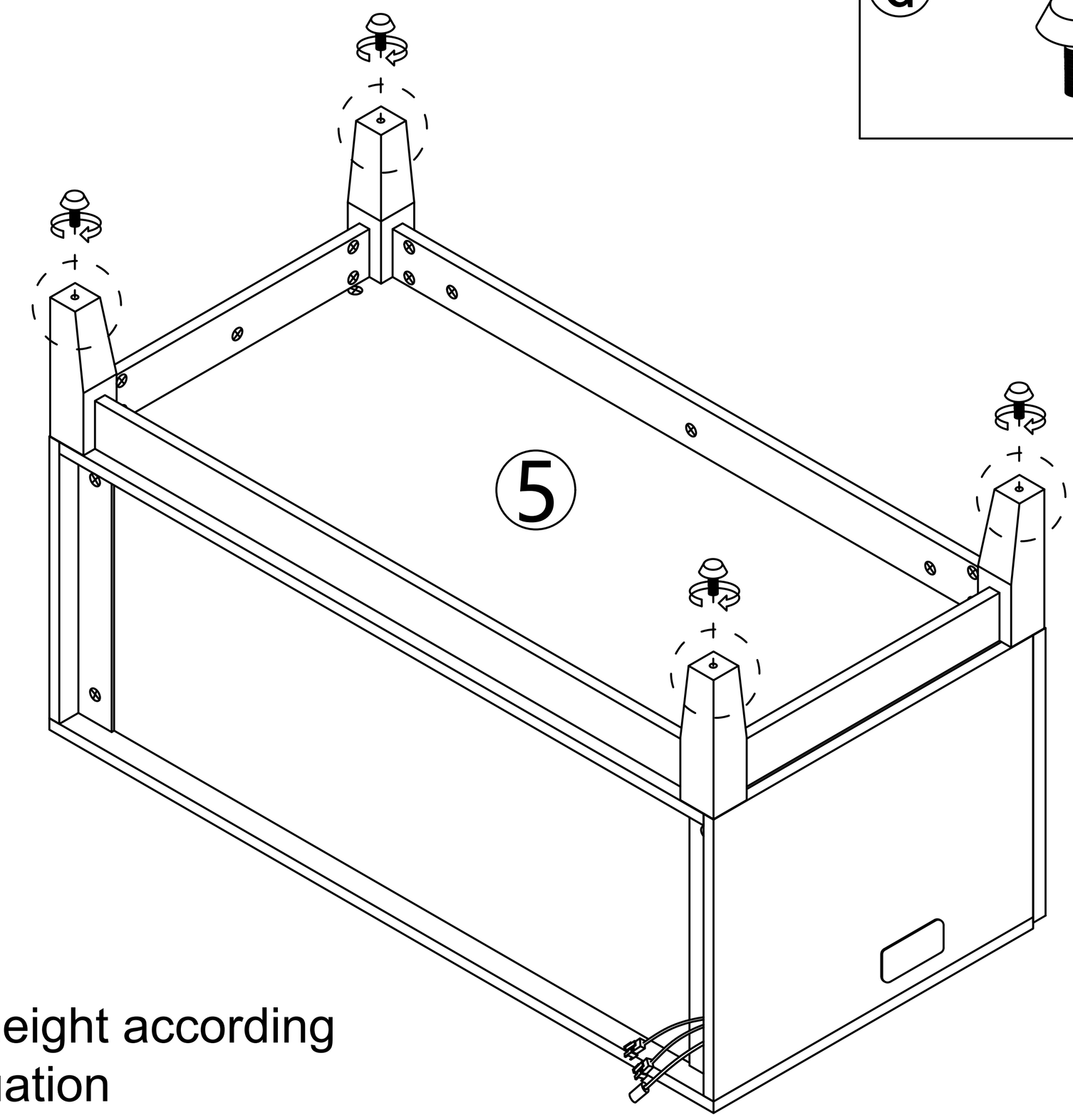

Adjust the foot height according to the actual situation

Step 31

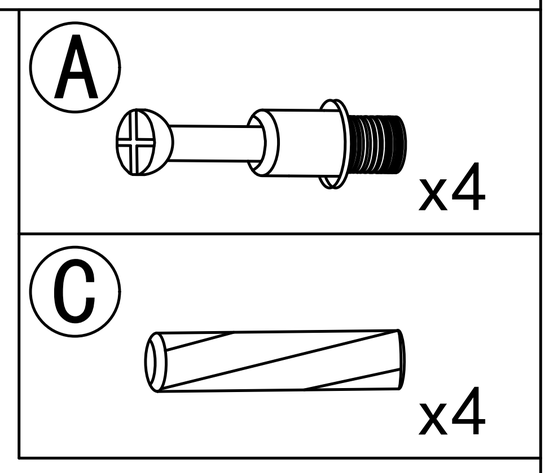

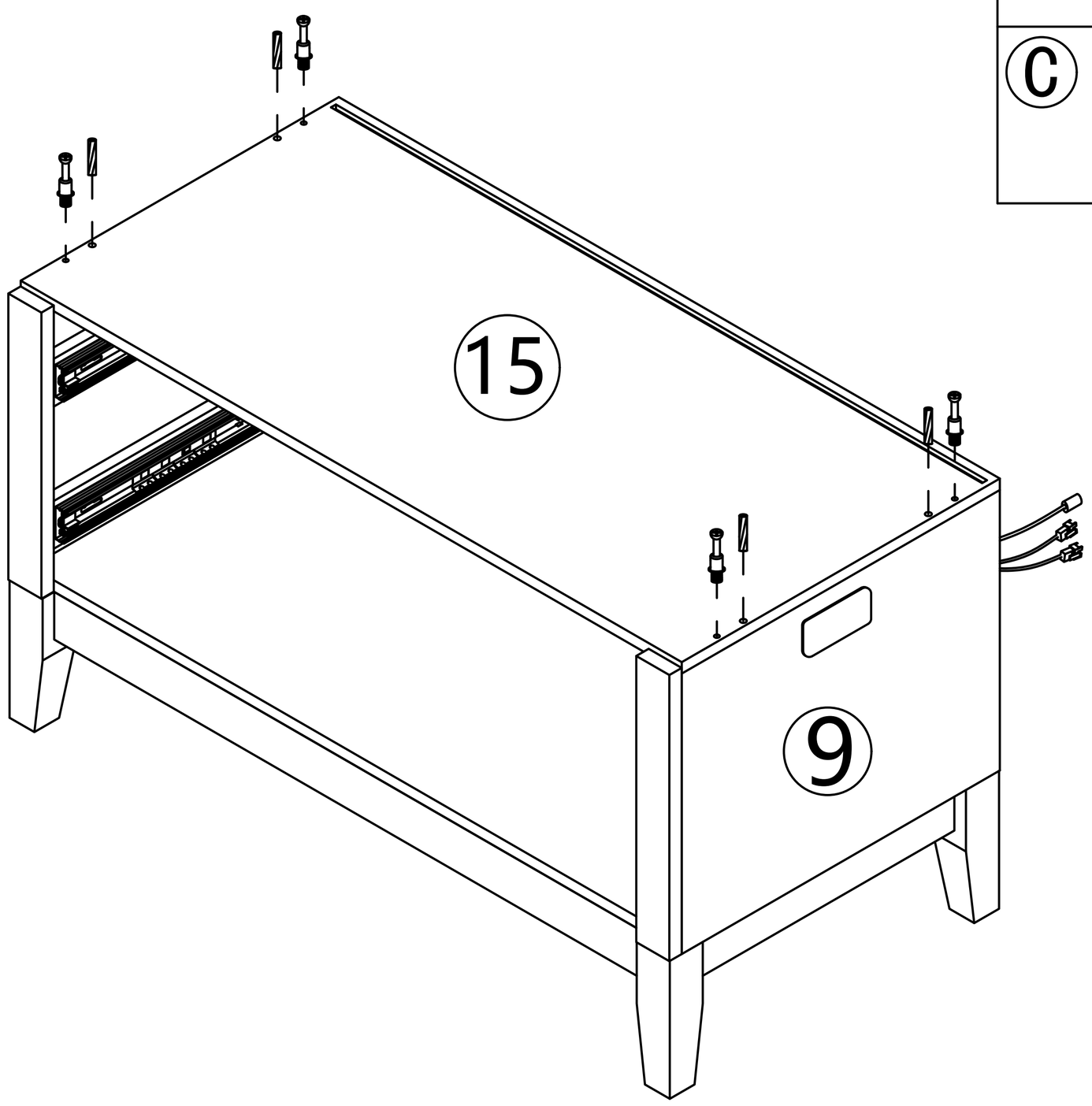

Step 32

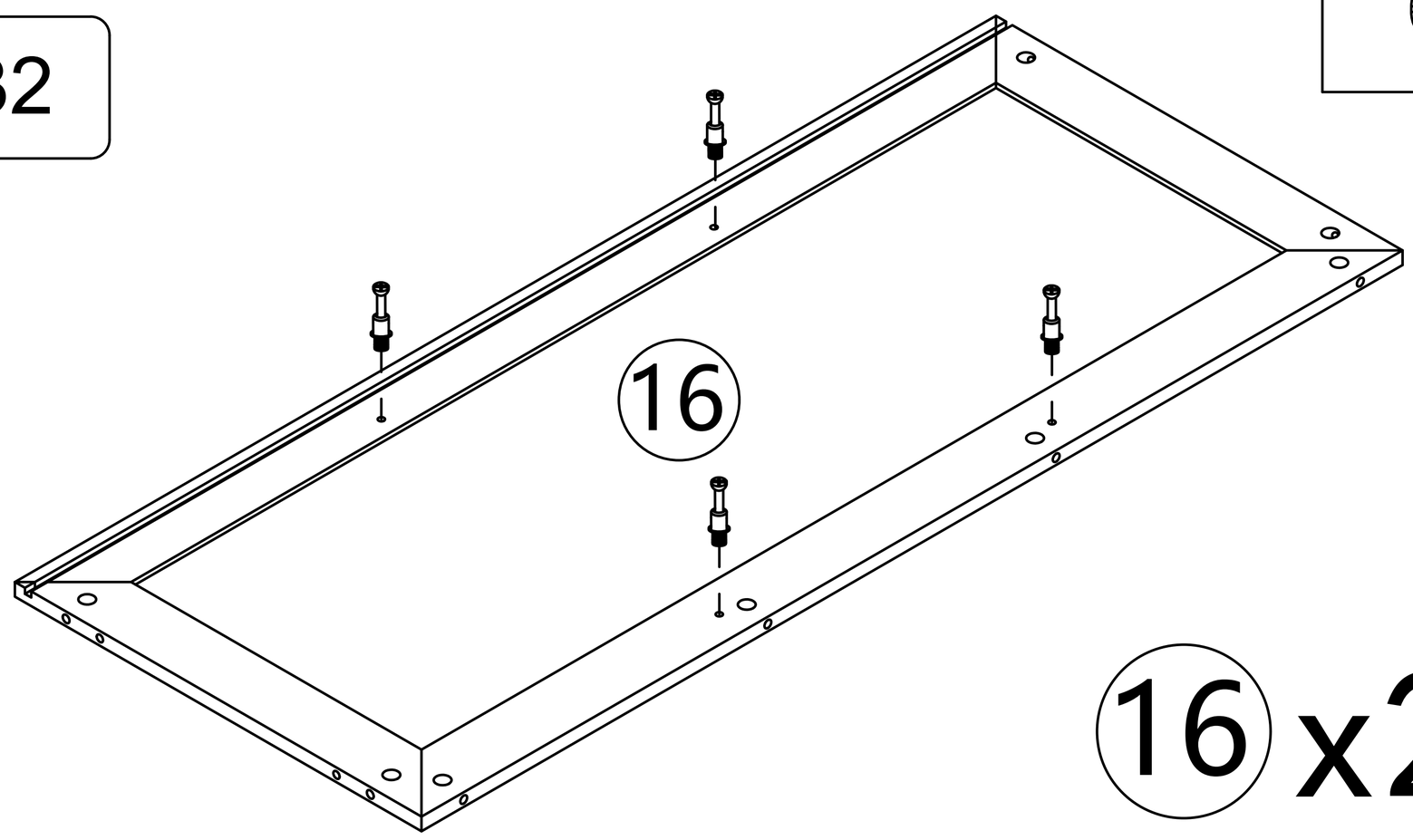

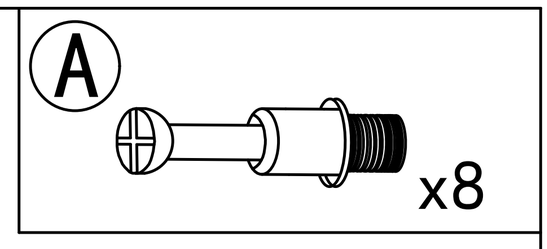

16 x2

Step 33

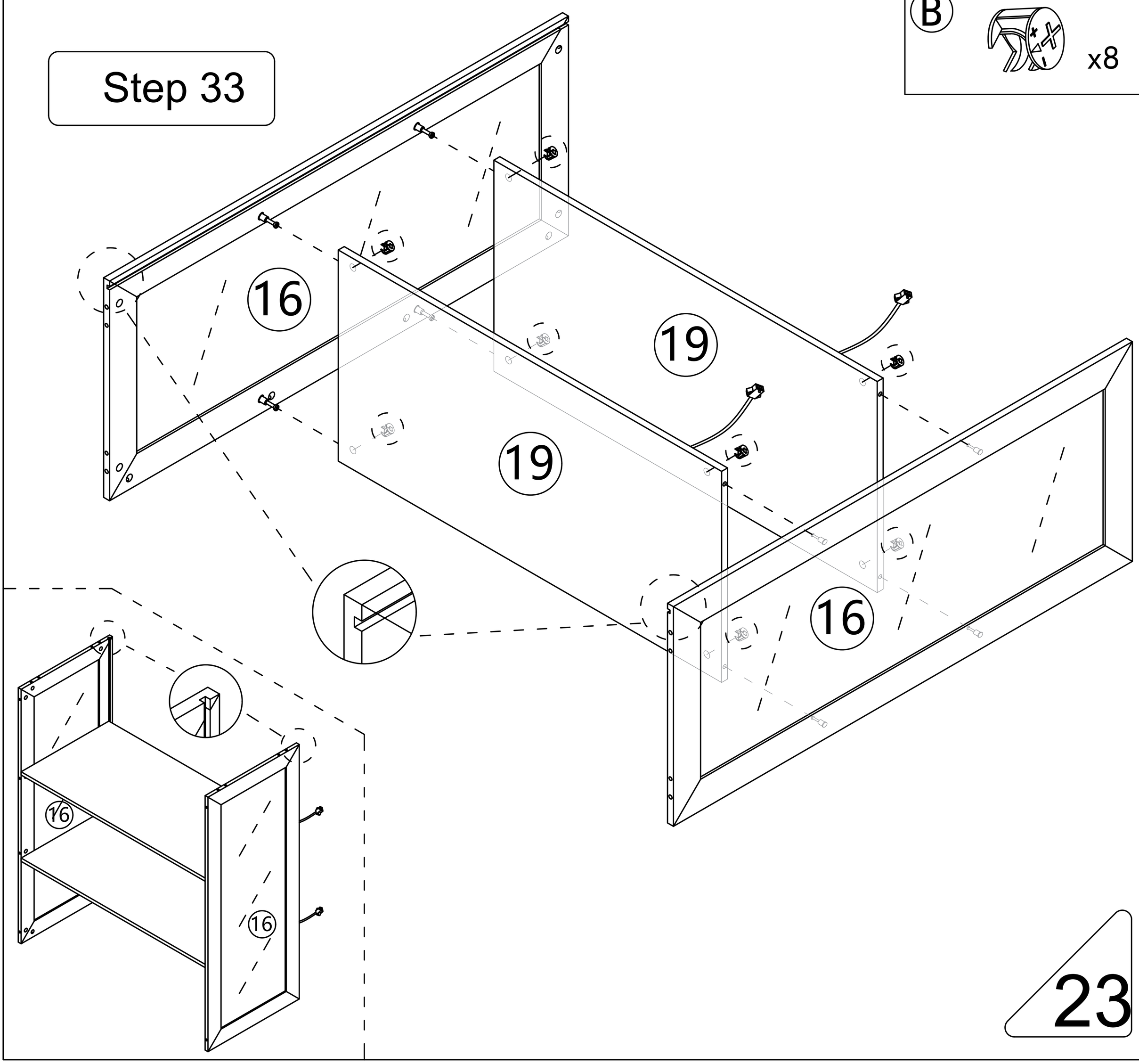

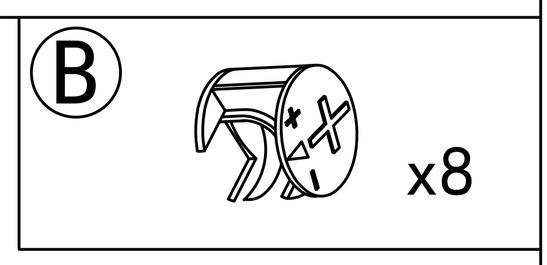

Step 34

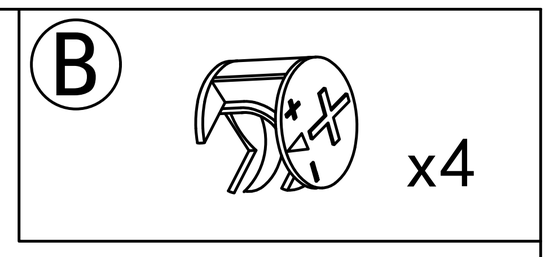

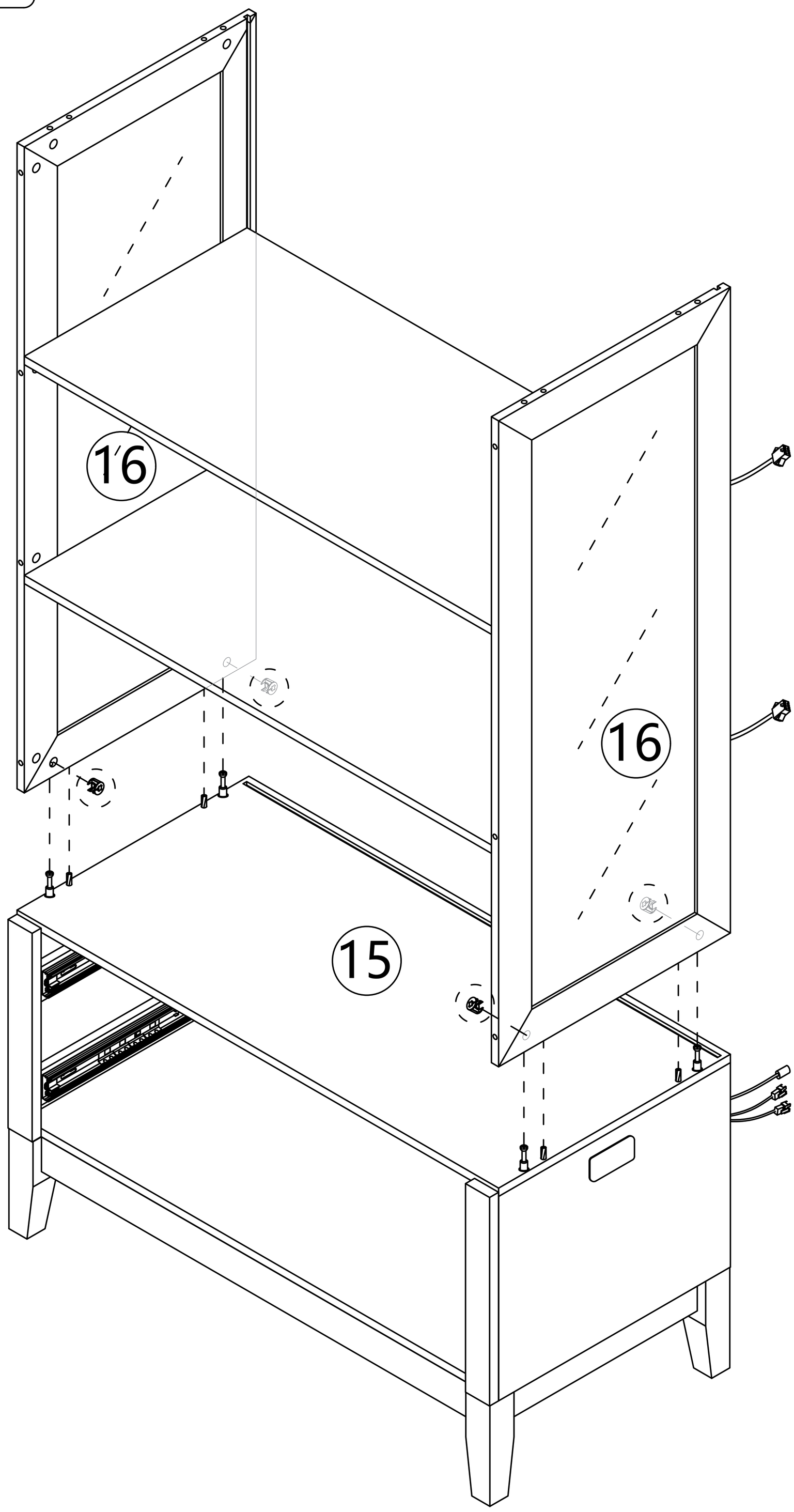

Step 35

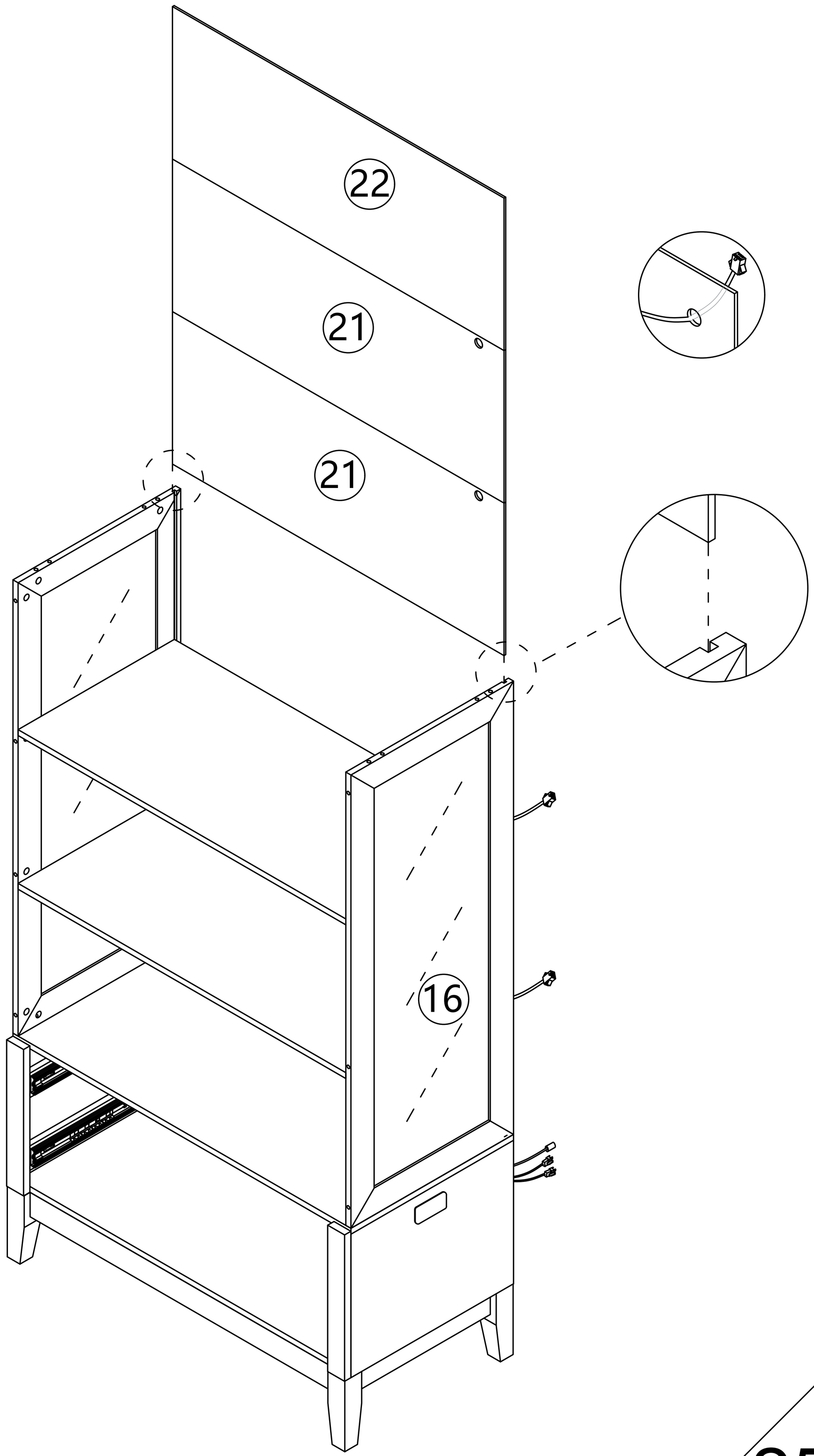

Step 36

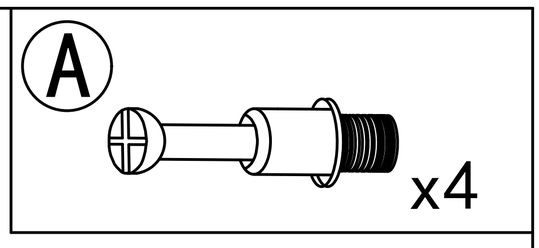

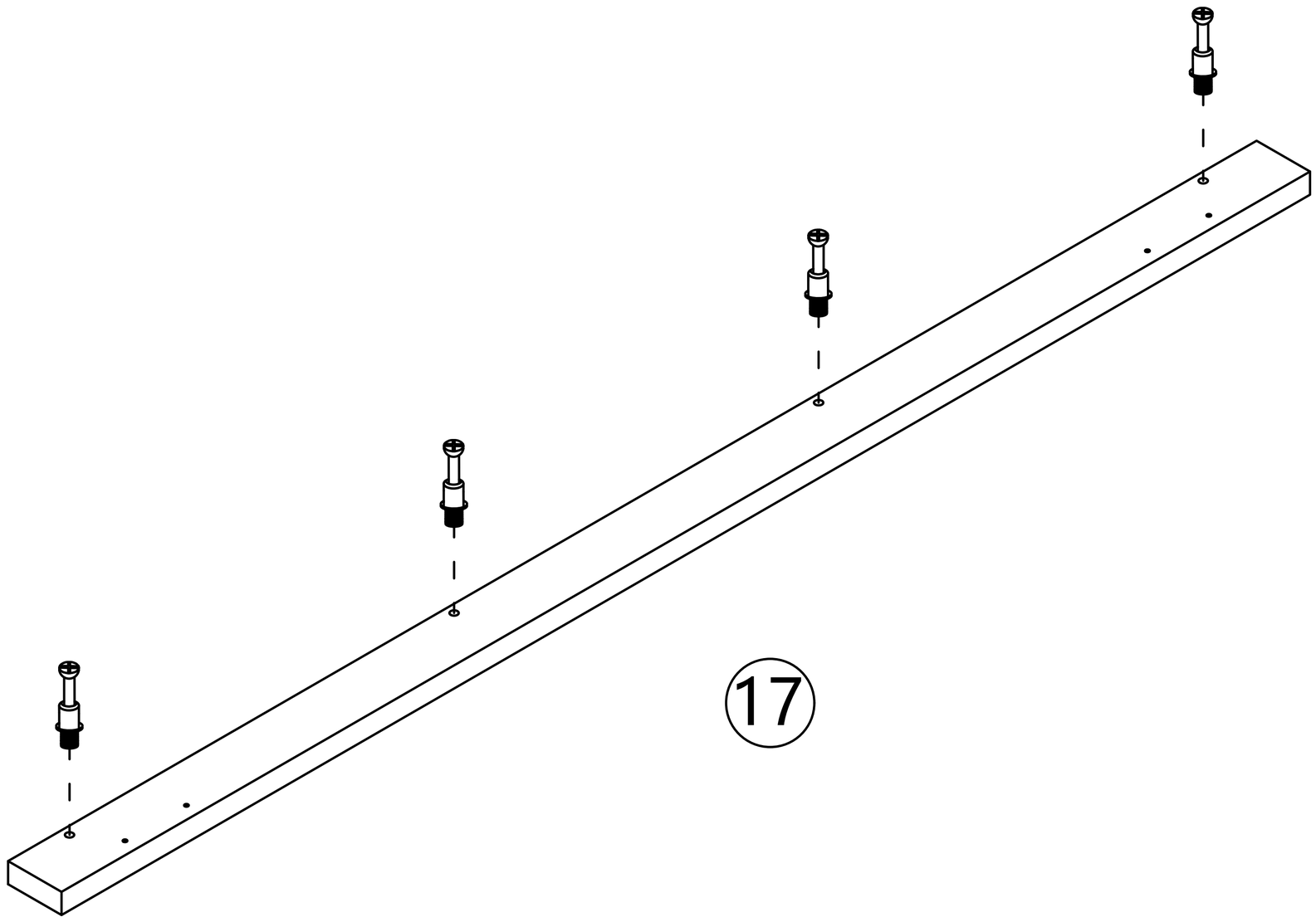

Step 37

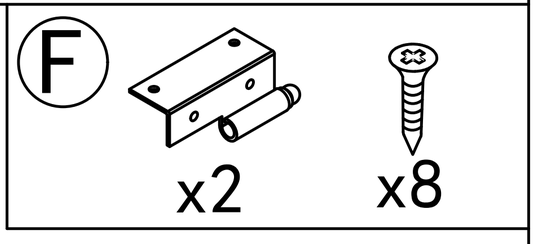

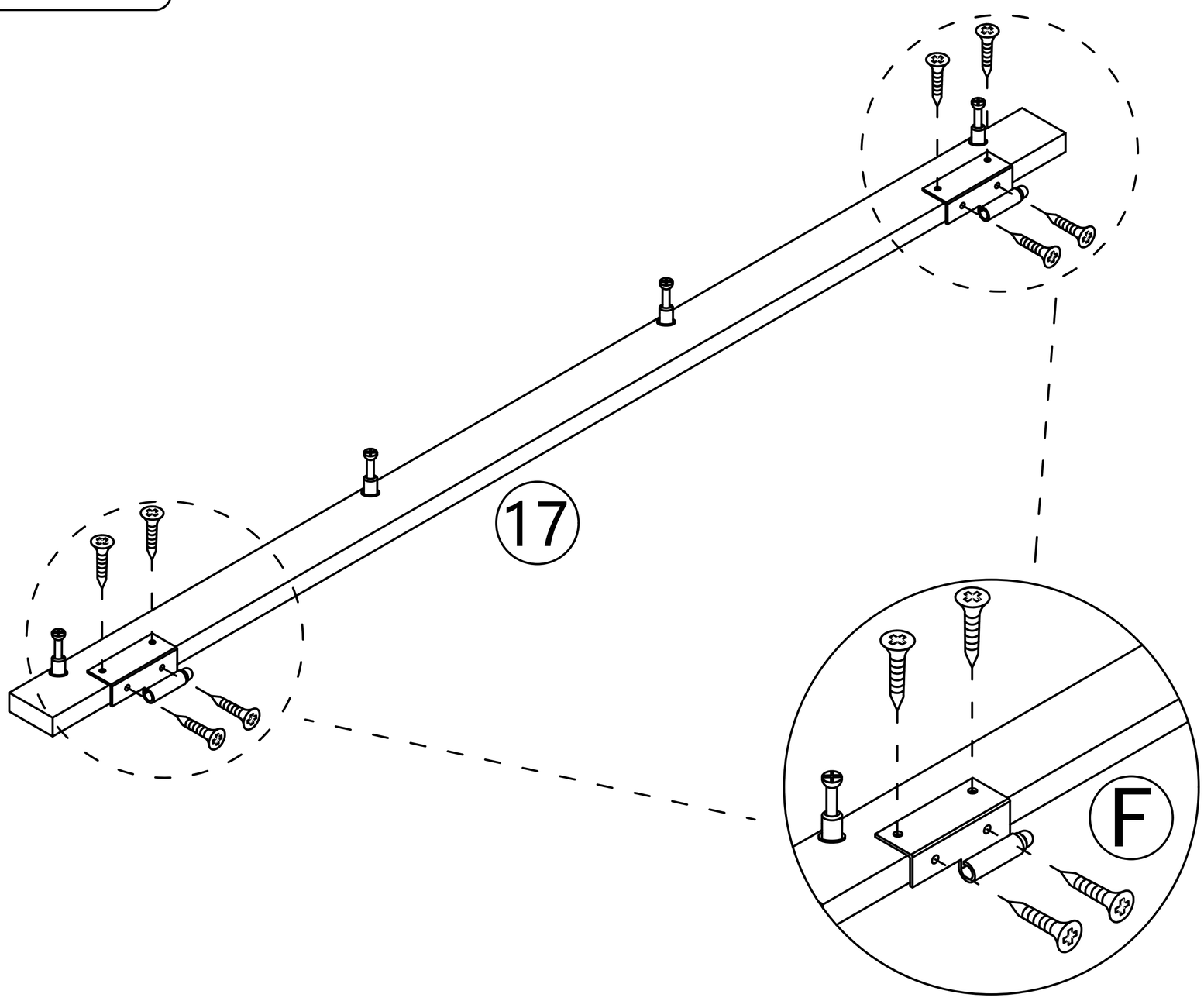

Step 38

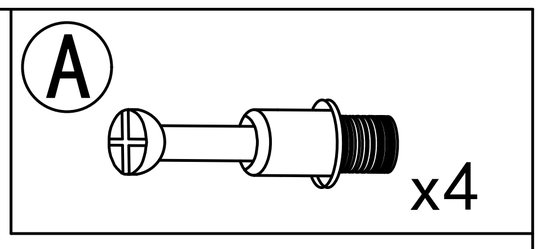

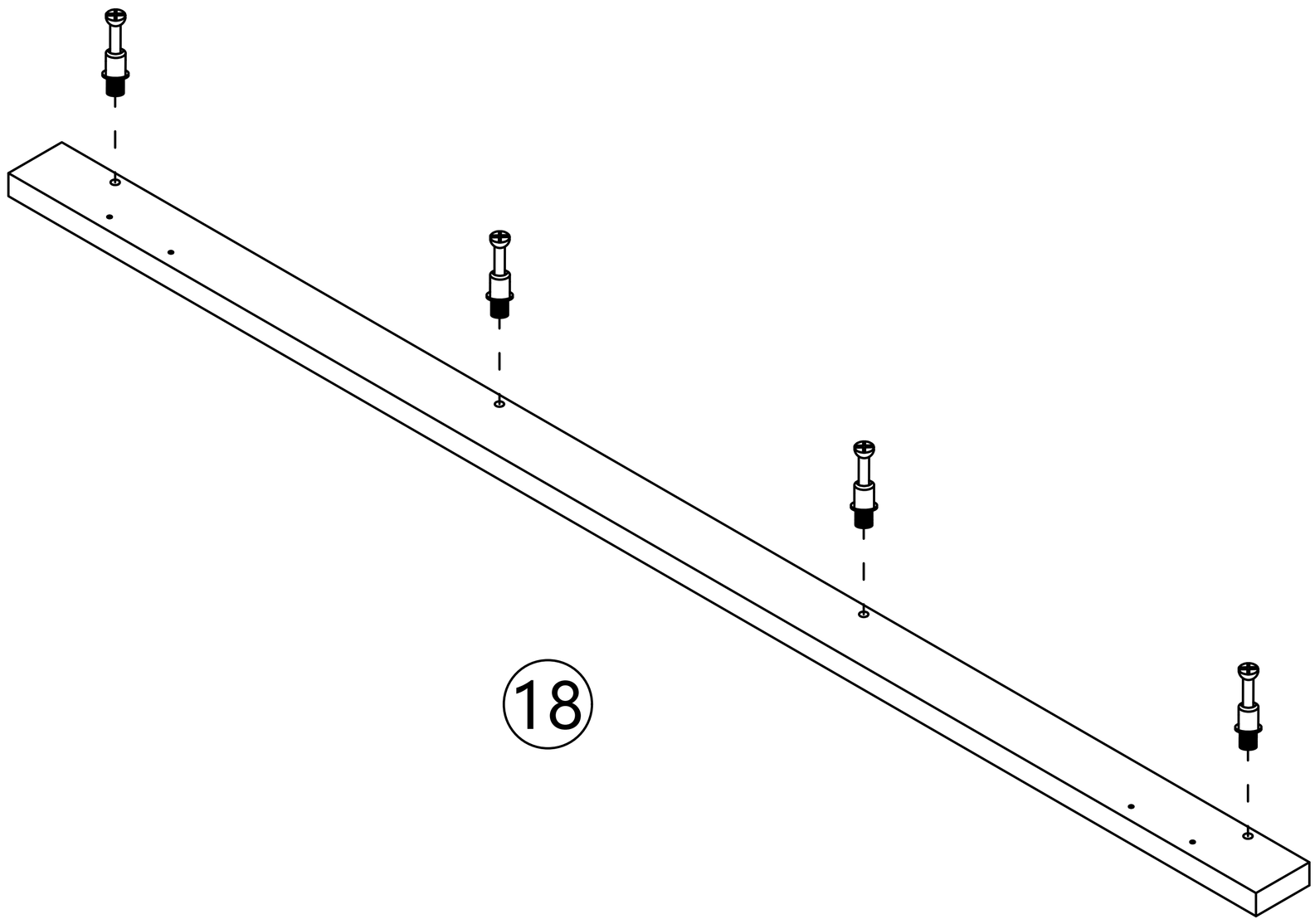

Step 39

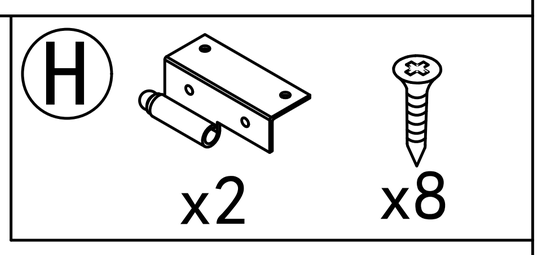

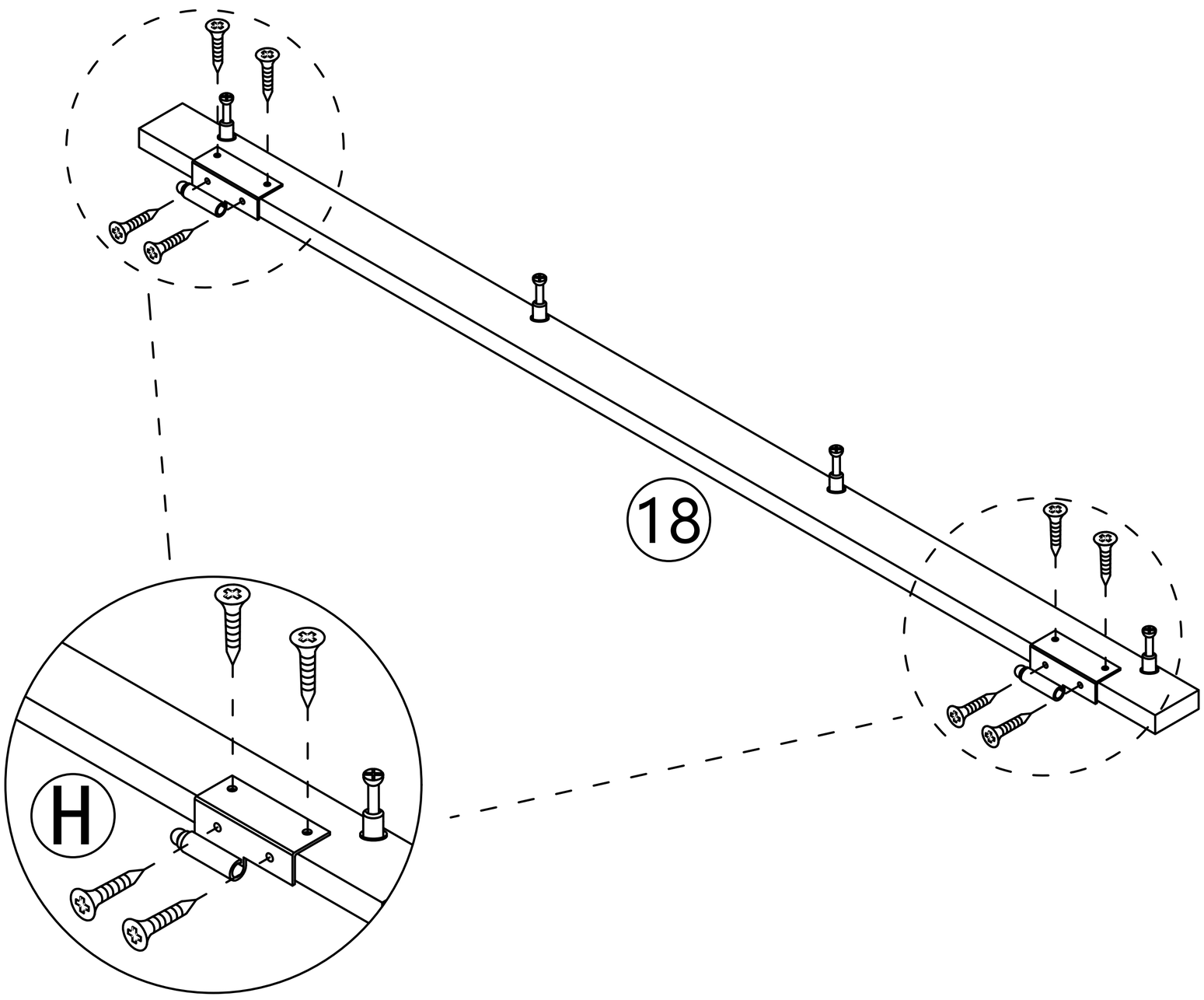

Step 40

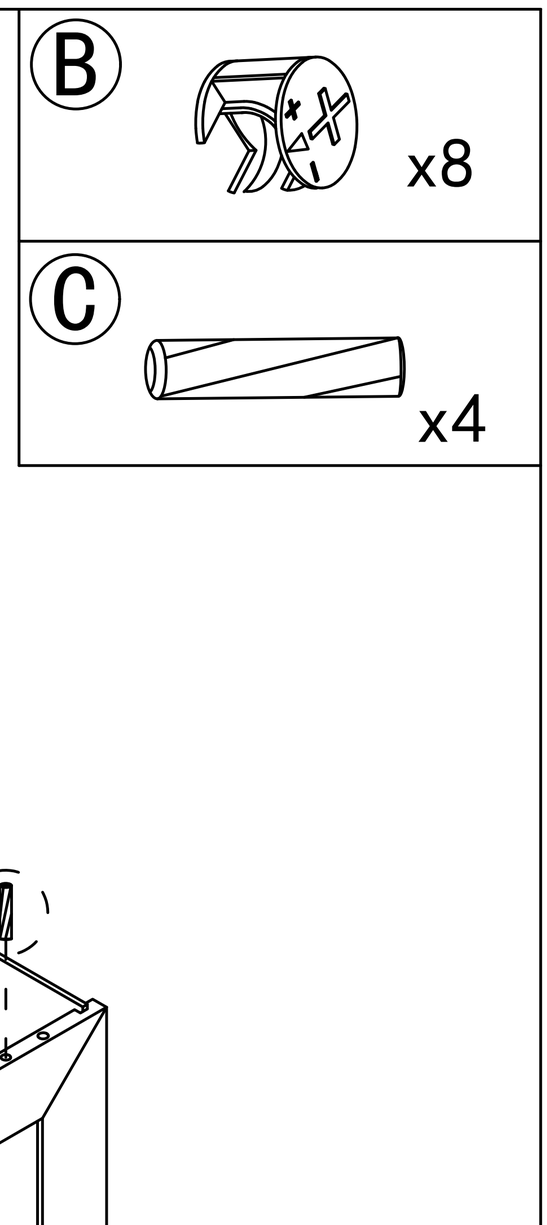

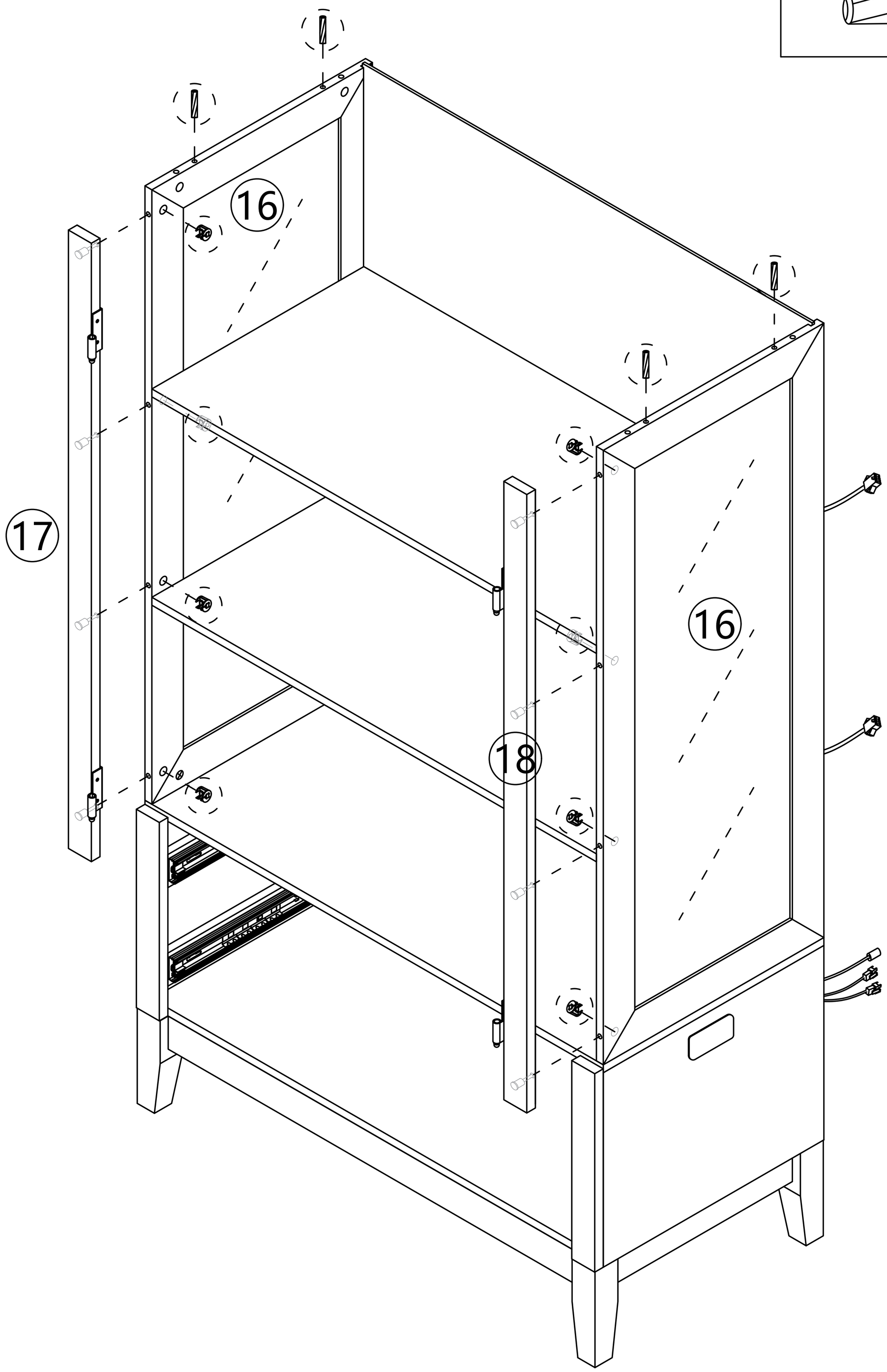

Step 41

Connect the light cable socket

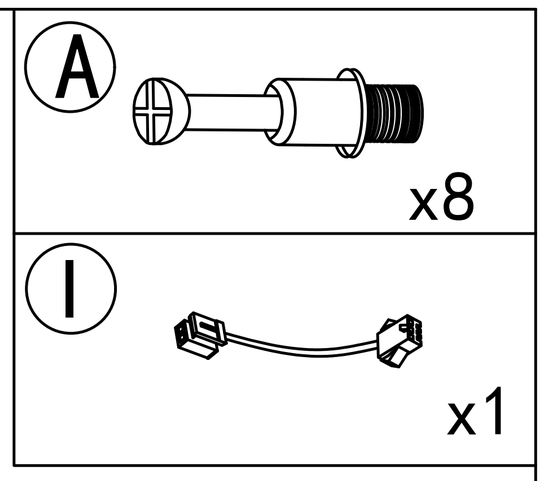

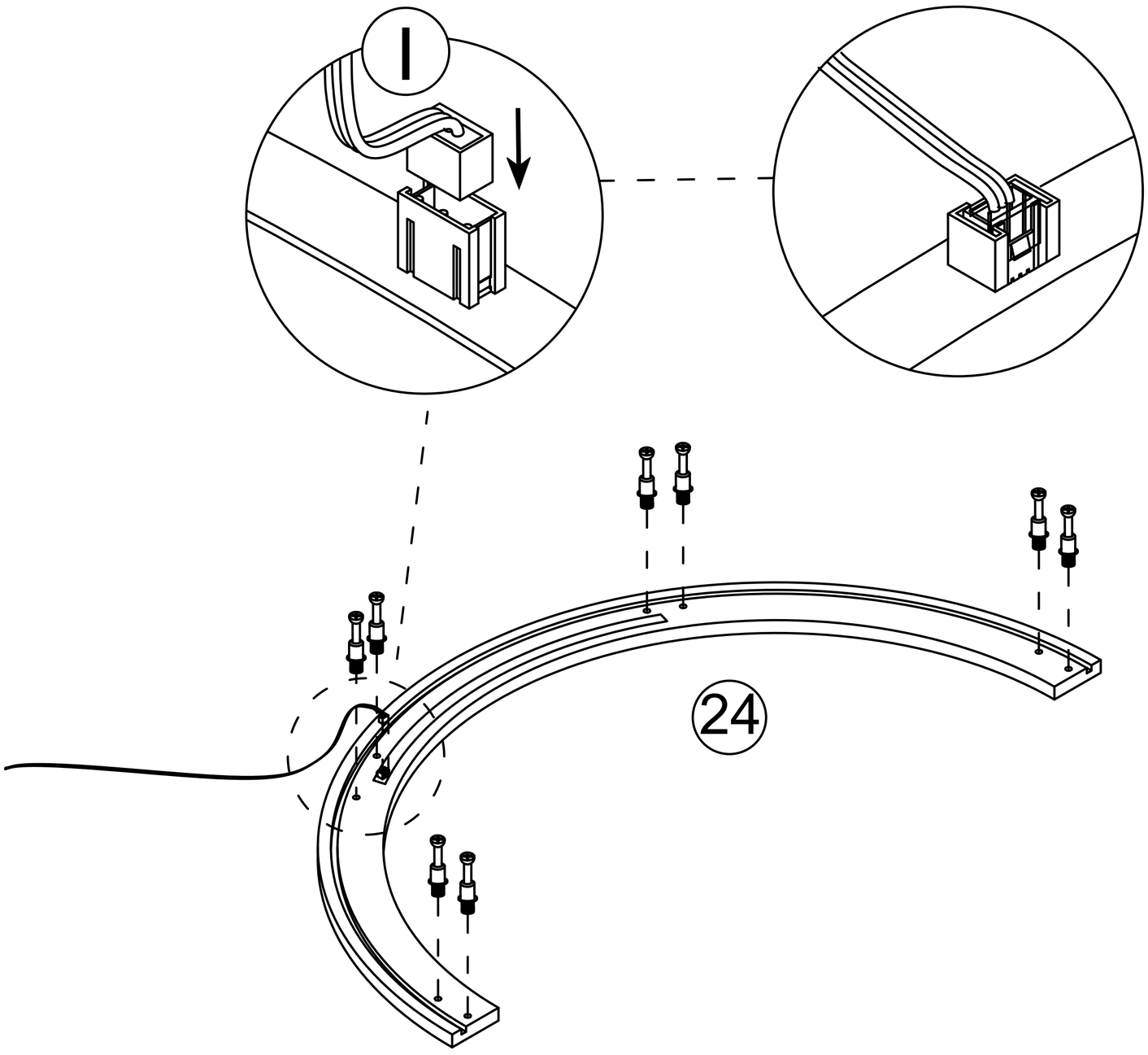

Arched top installation

Step 42

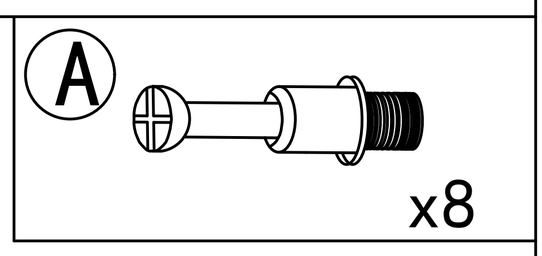

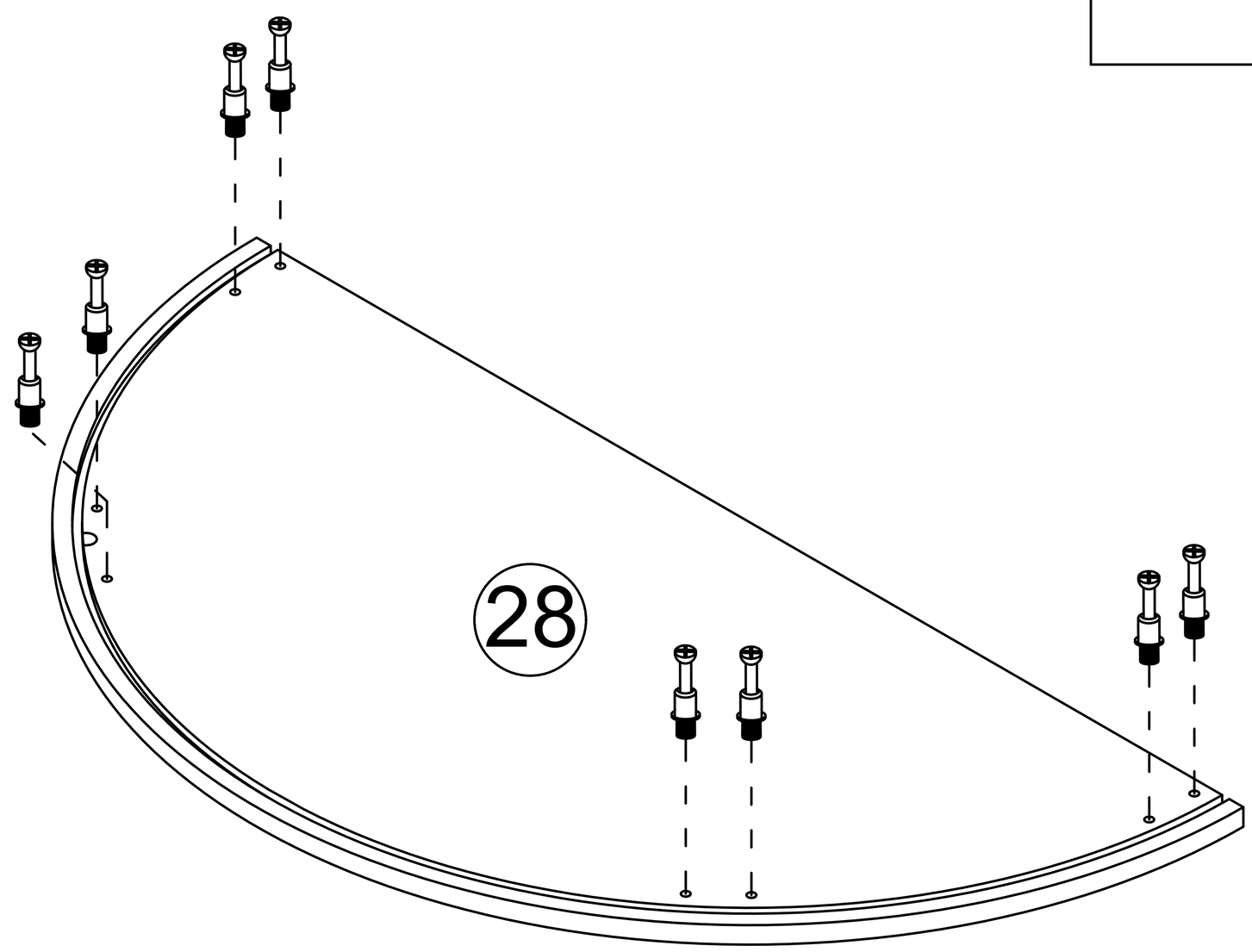

Step 43

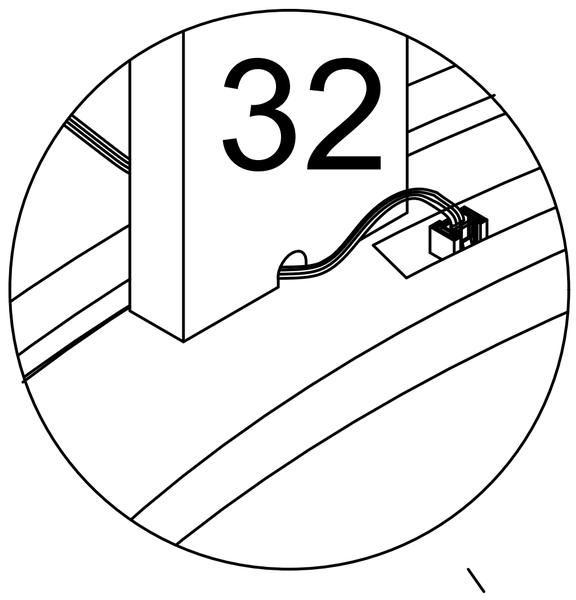

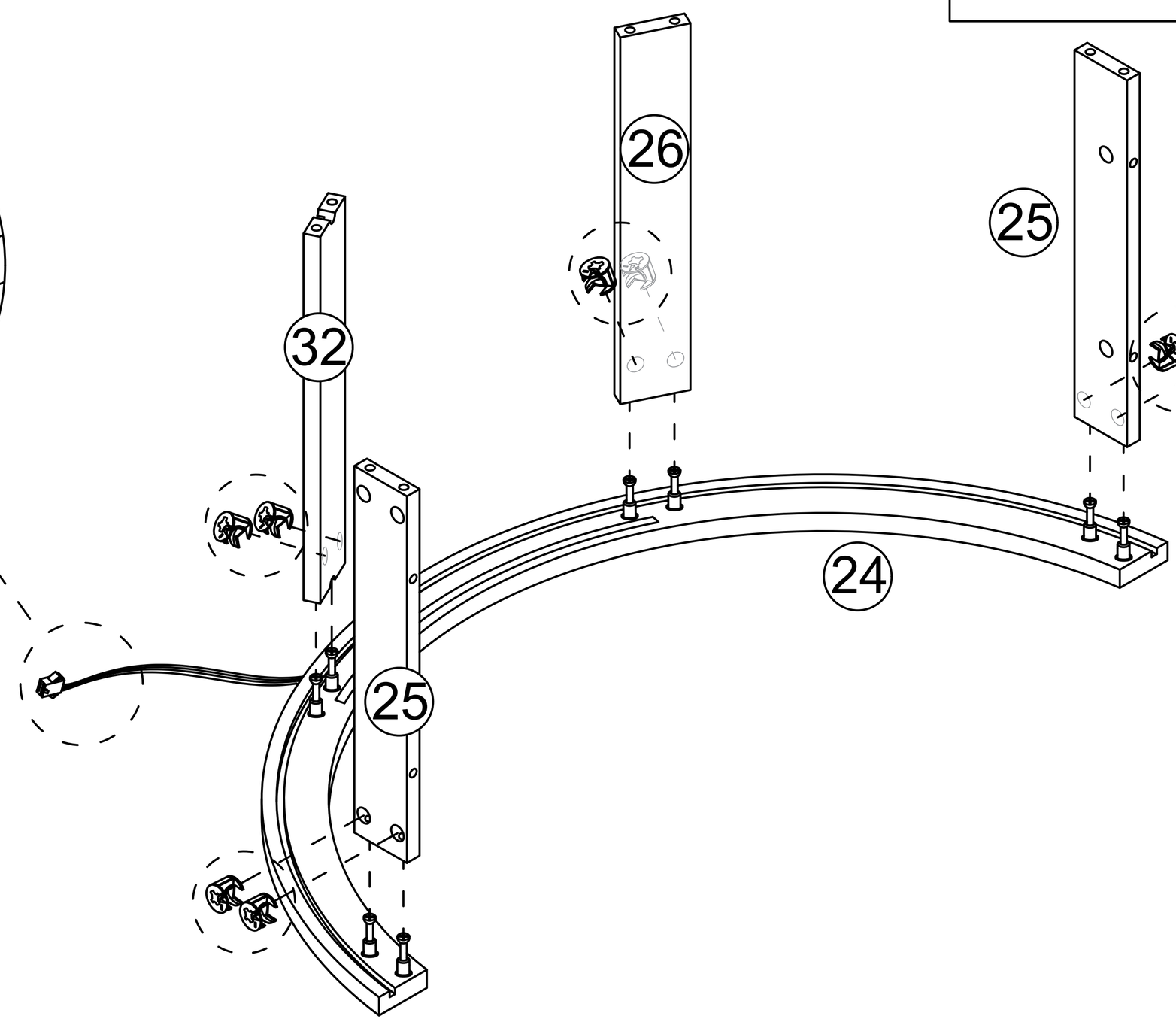

Thread the light wire through board 32 and tighten the nut

Step 44

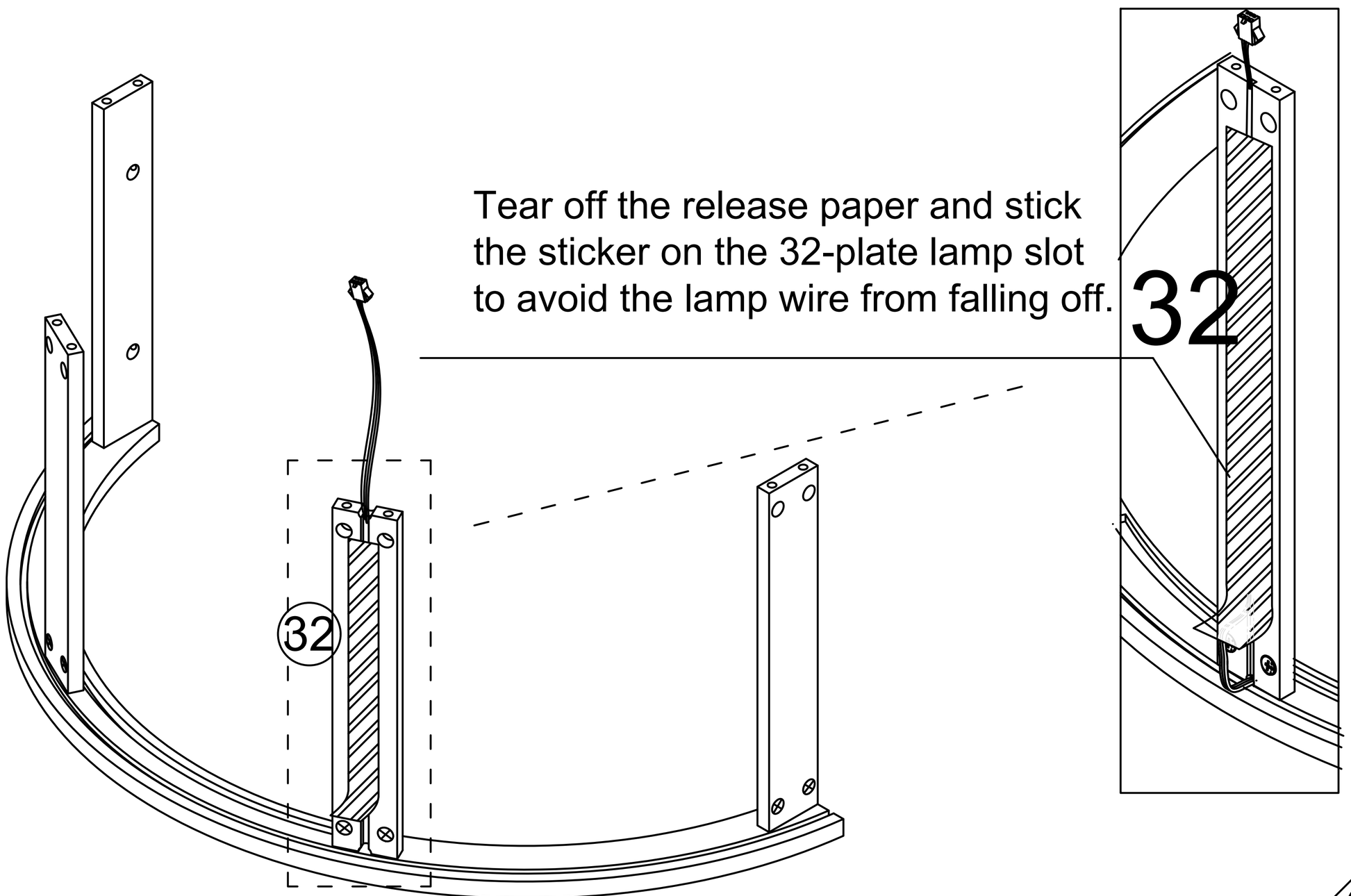

Tear off the release paper and stick the sticker on the 32-plate lamp slot to avoid the lamp wire from falling off.

Step 45

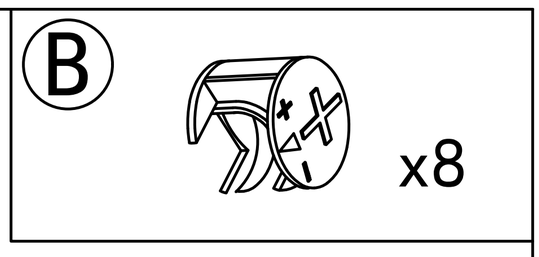

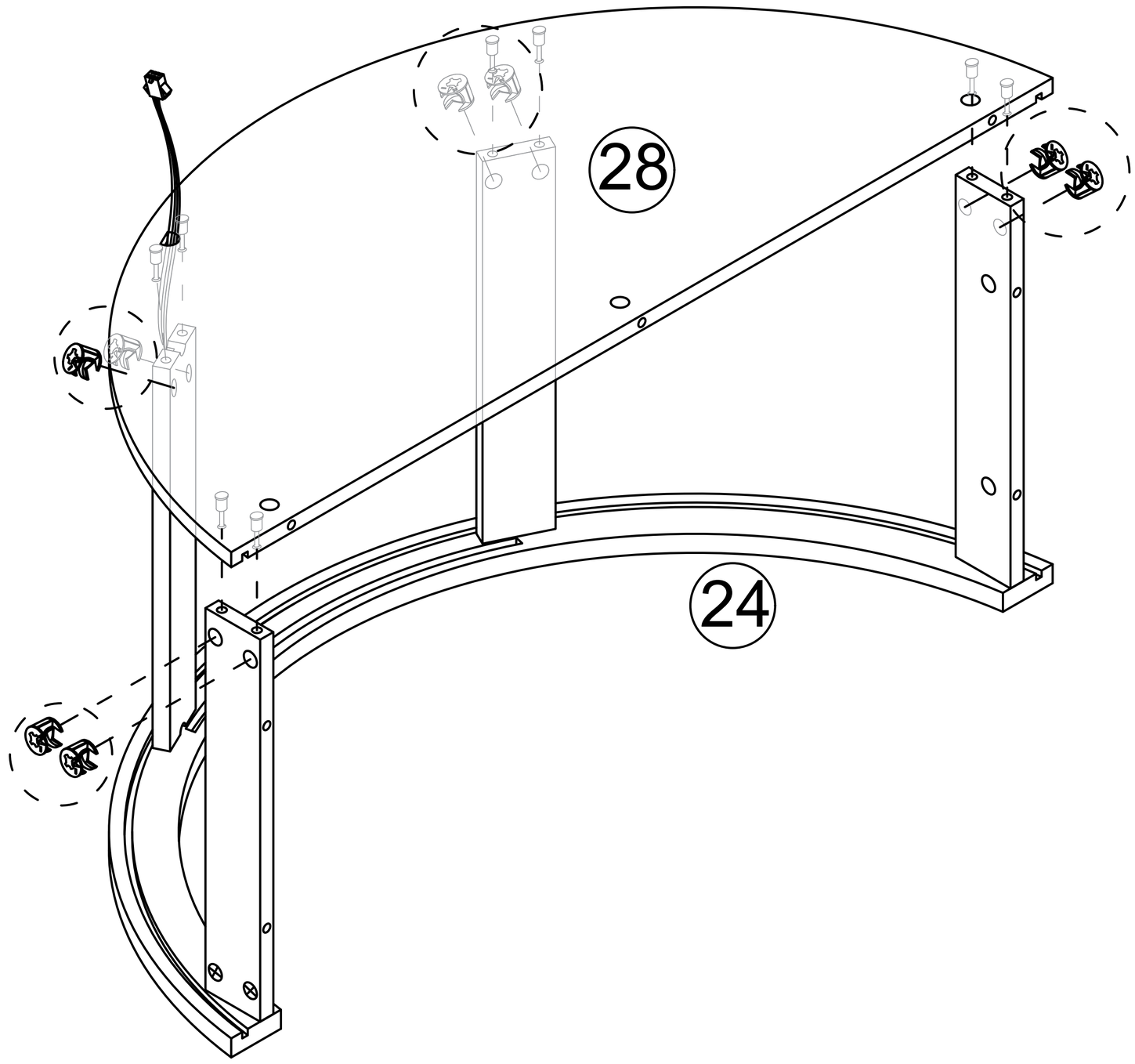

Step 46

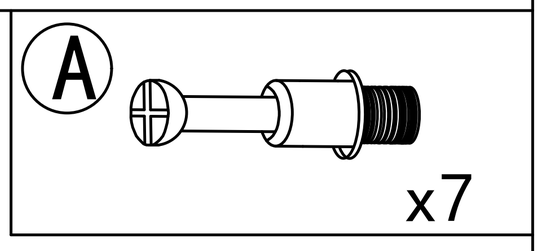

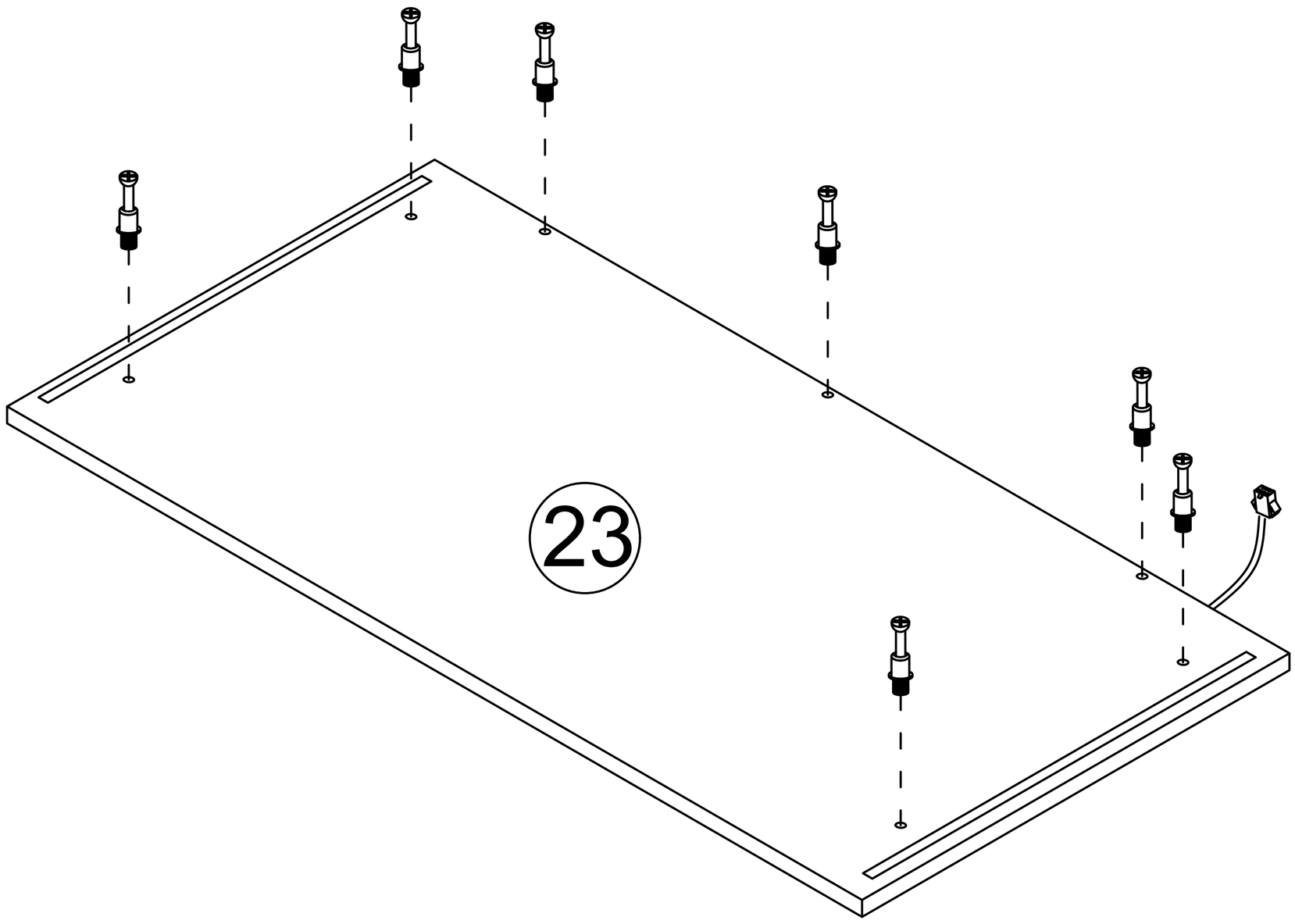

Step 47

Note: When installing the 27 plate, push the middle of the 27 plate by hand to push the 27 plate into the groove.

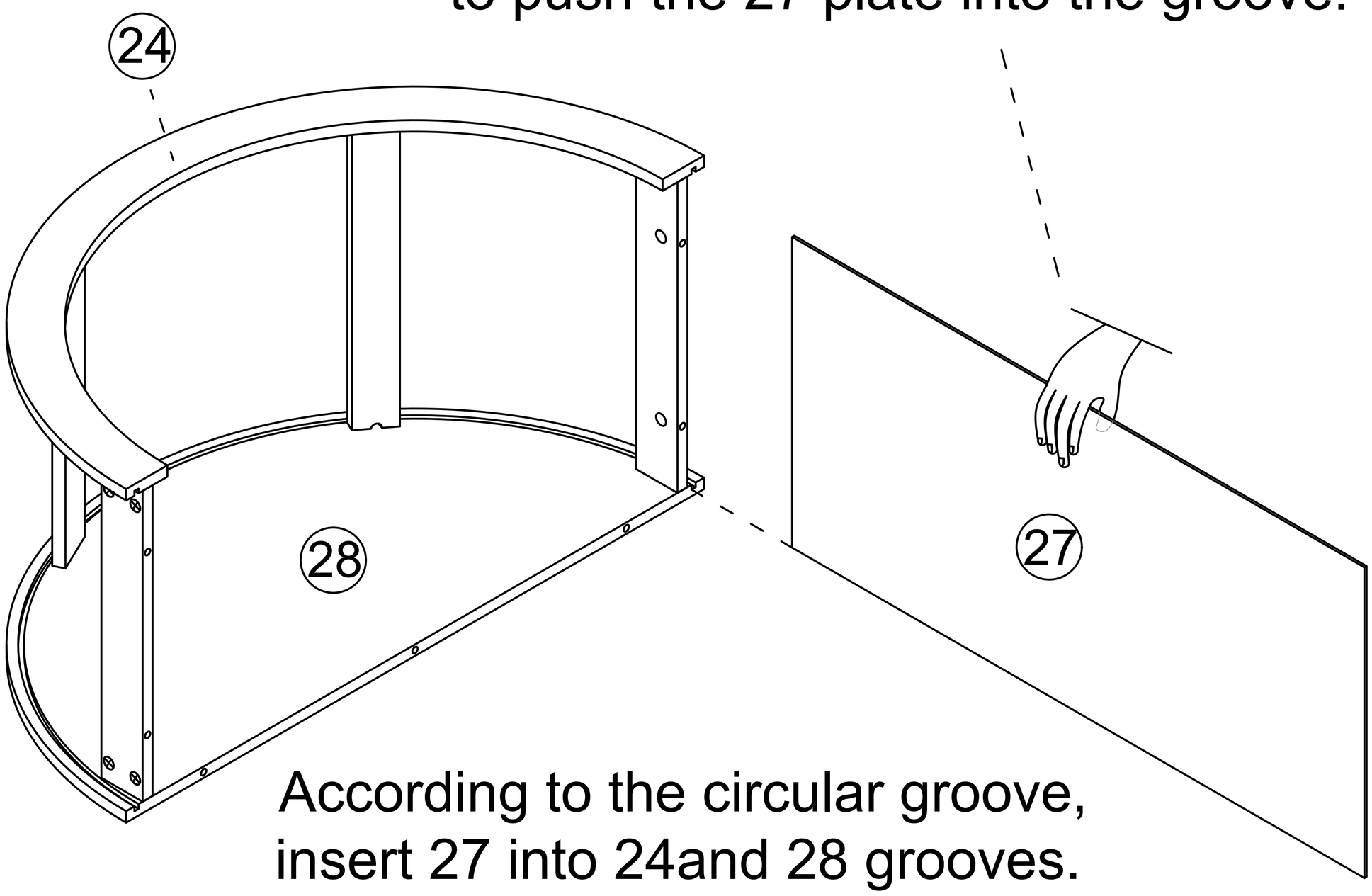

According to the circular groove, insert 27 into 24and 28 grooves.

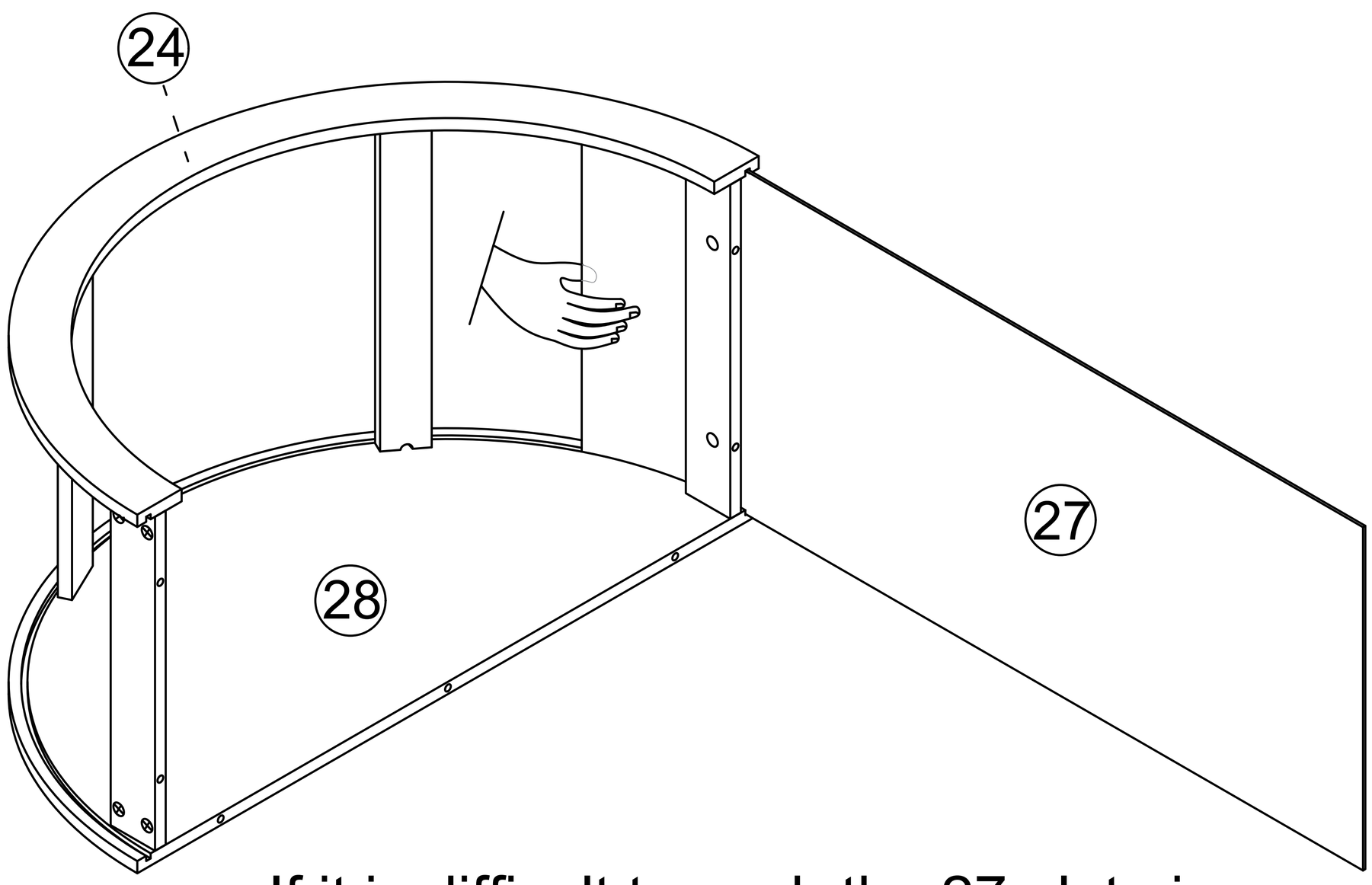

If it is difficult to push the 27 plate in, you can use the pull method.

Step 48

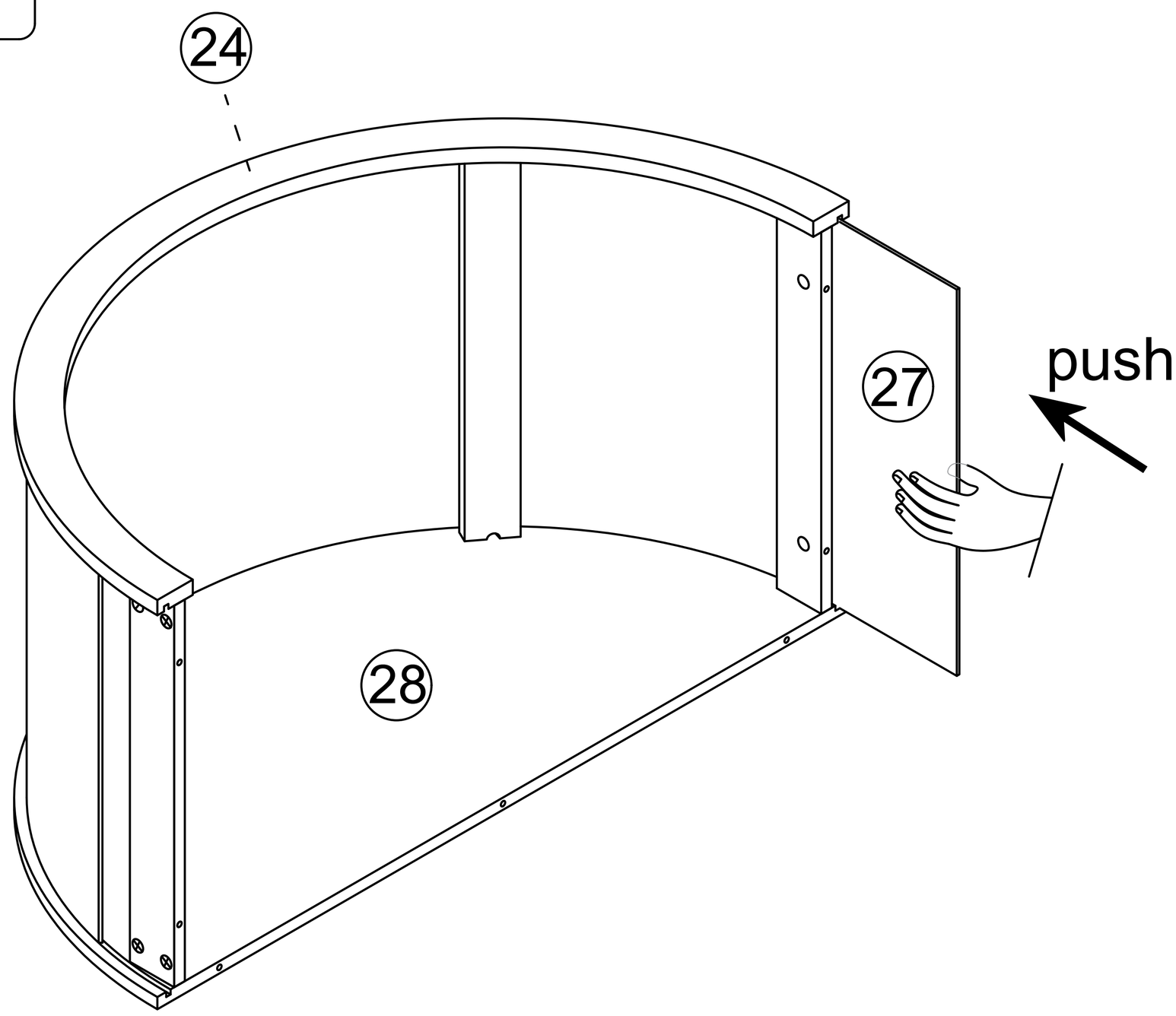

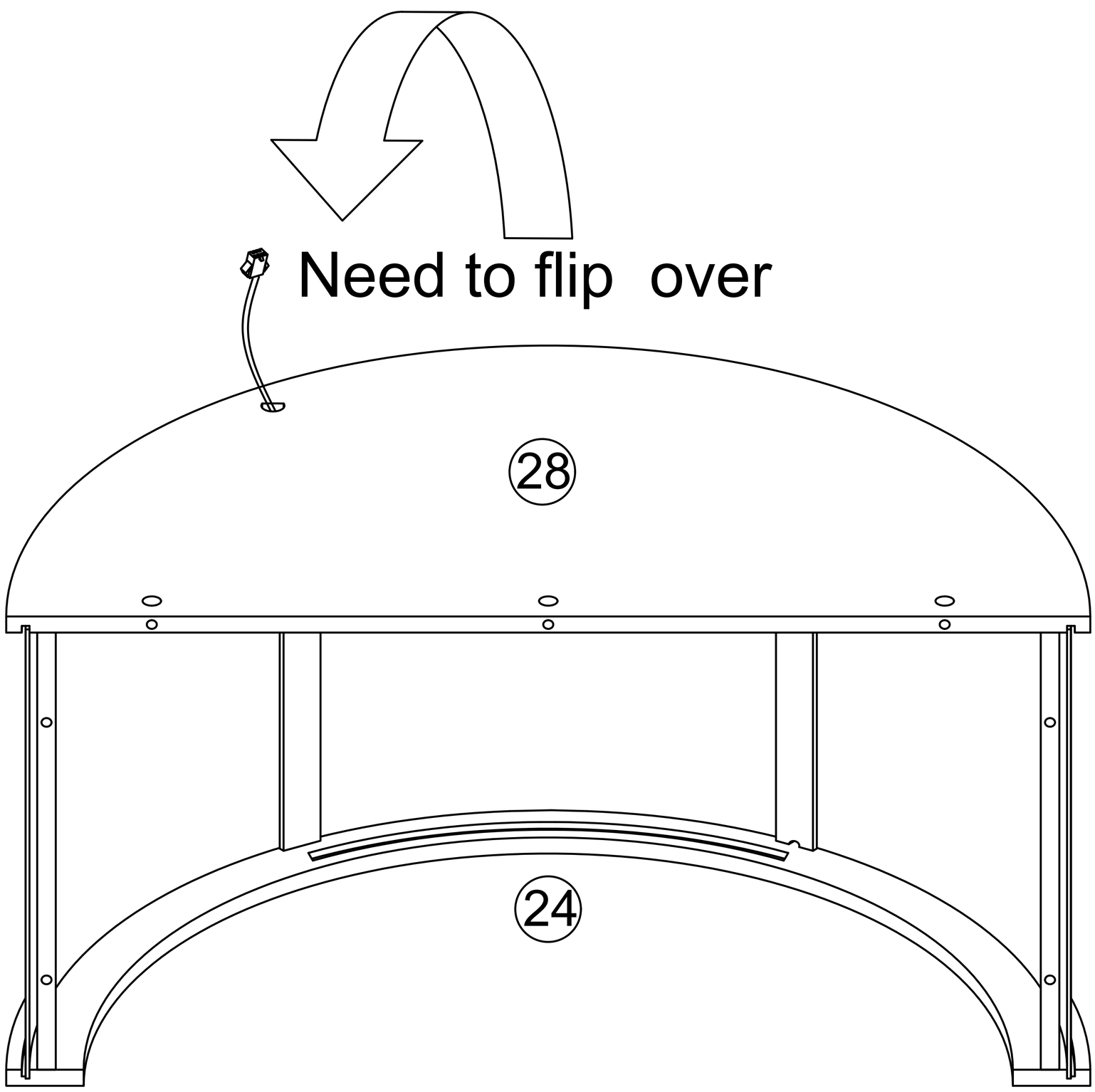

Step 49

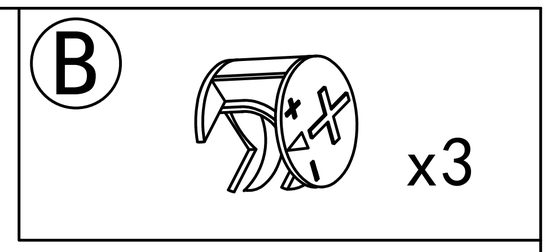

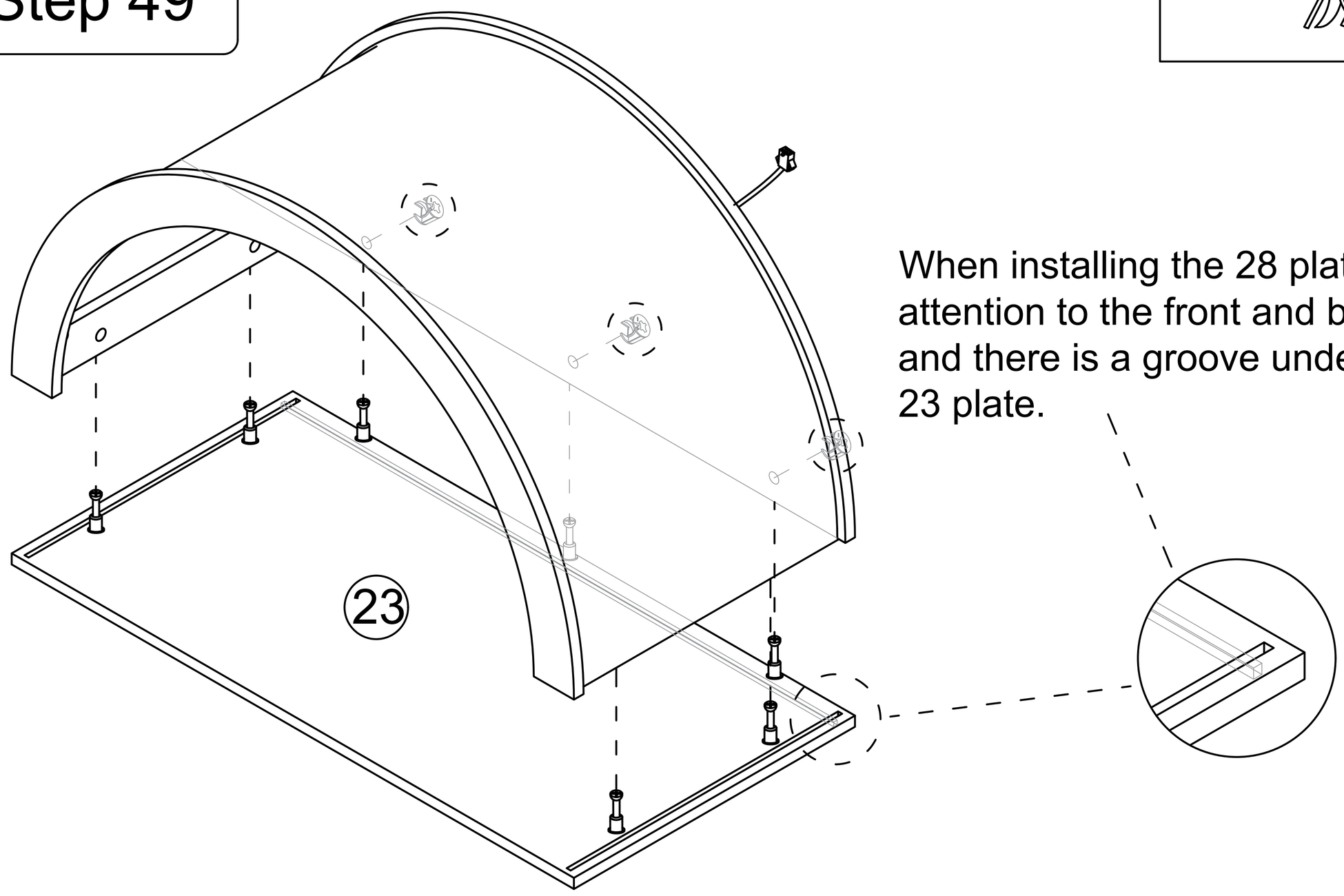

When installing the 28 plate, pay attention to the front and back, and there is a groove under the 23 plate.

Step 50

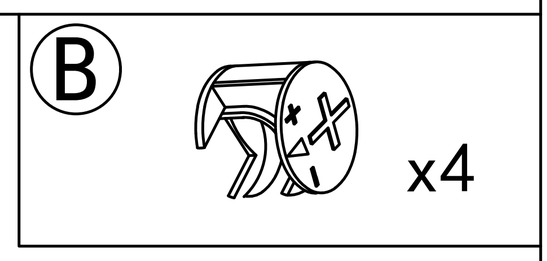

Note: After installing the 27 board, you need to pat the backboards on both sides into the grooves of the 23 board by hand.

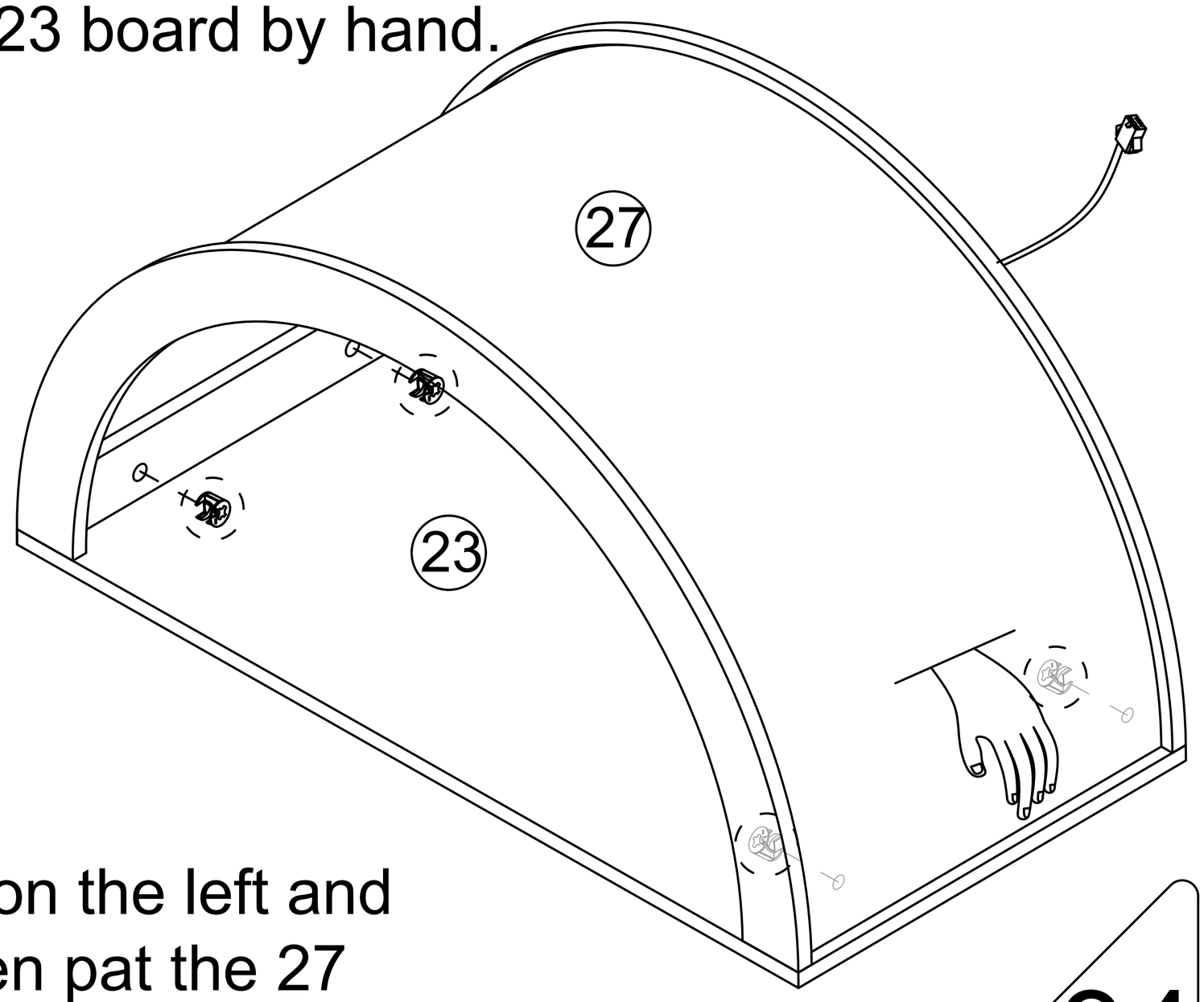

Note: pat the 27 plate on the left and then screw the nut, then pat the 27 plate on the right and screw the nut.

Step 51

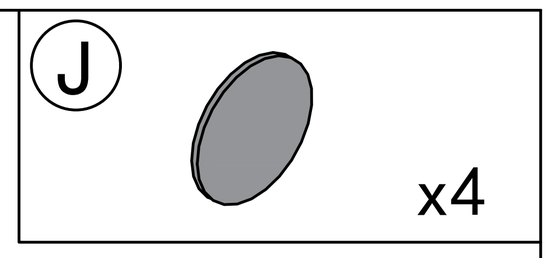

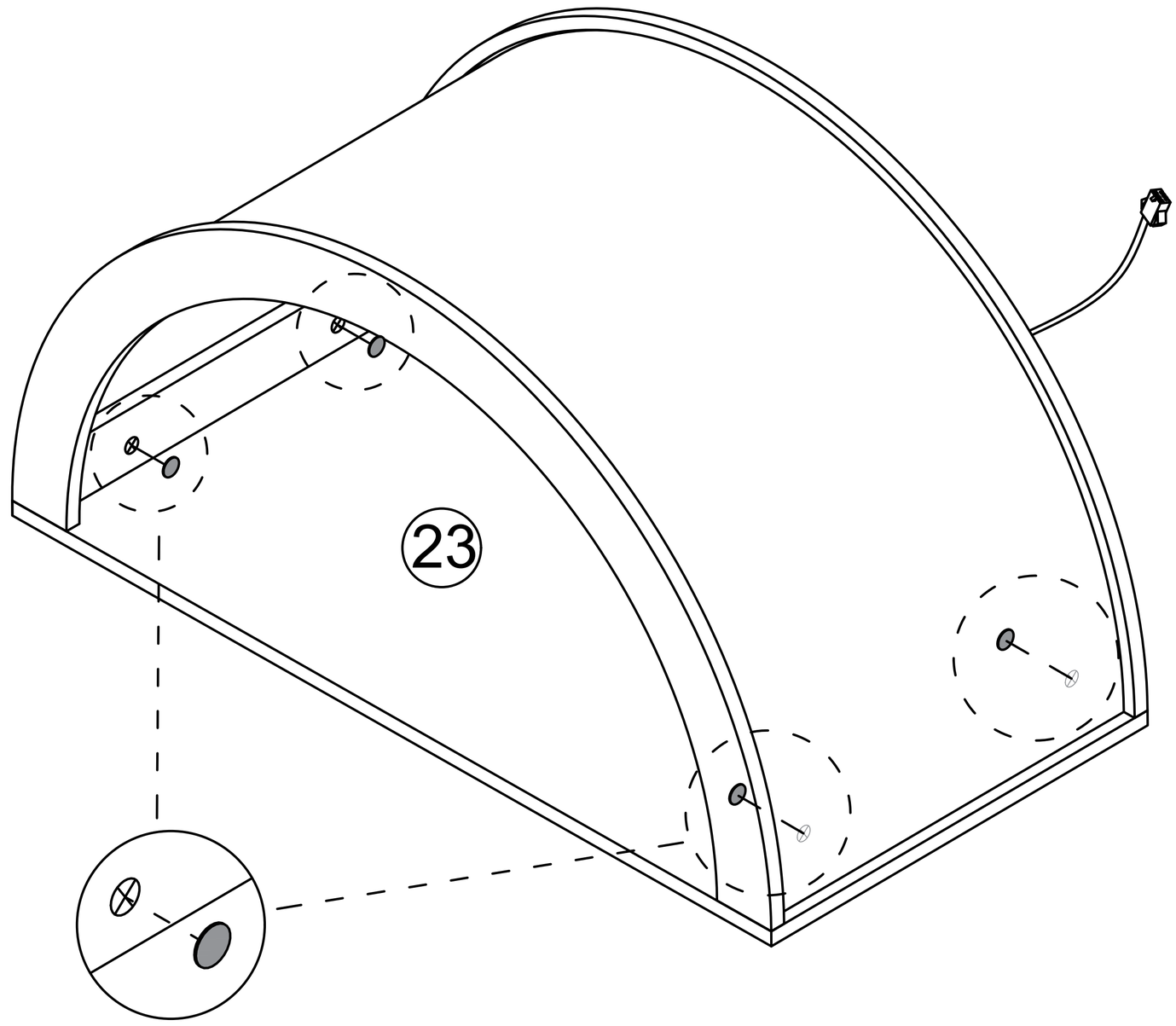

Step 52

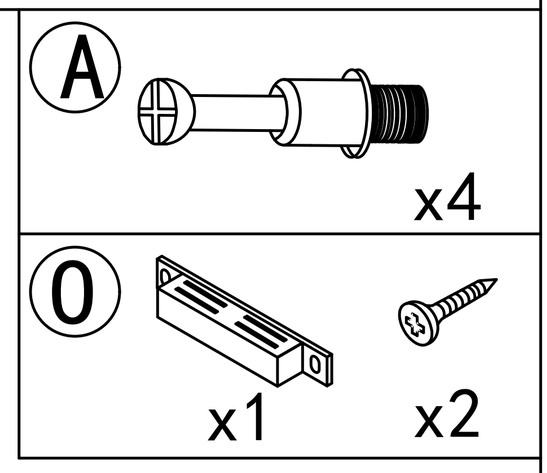

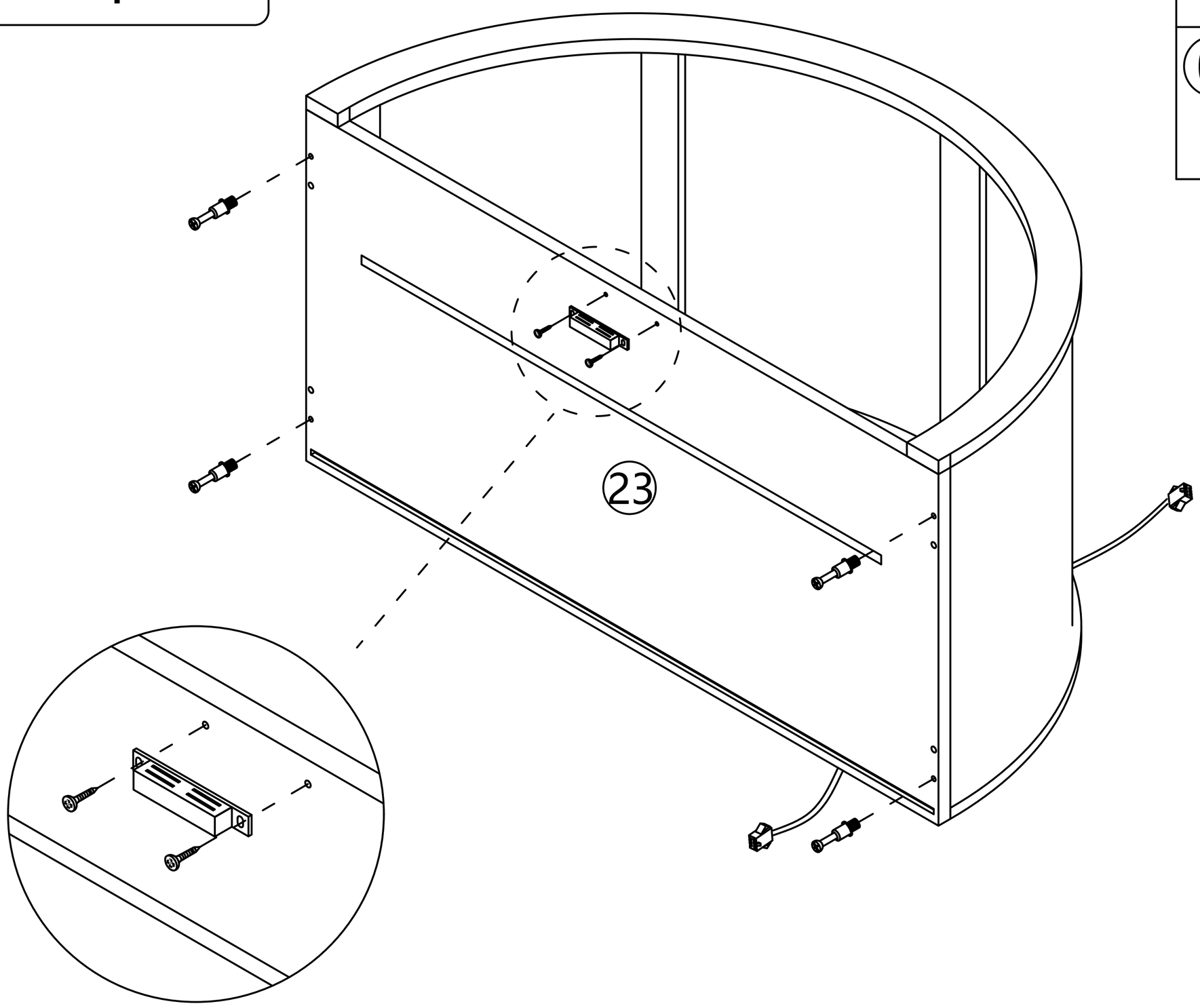

Step 53

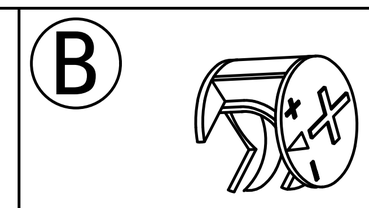

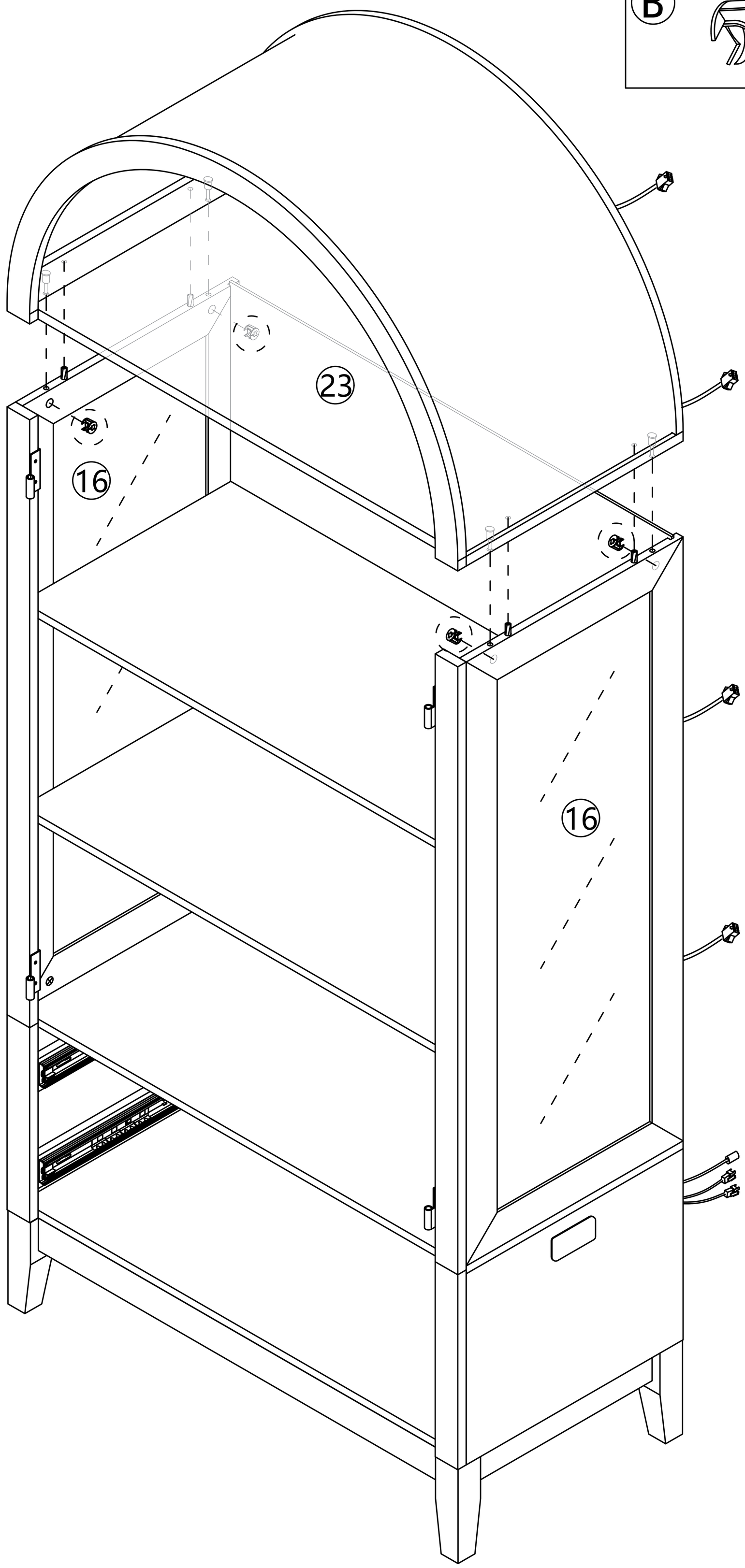

H	4pcs	16pcs	K	2pcs	4pcs	L	16pcs 16pcs
M	2pcs		N	16pcs		P	2pcs 2pcs
Q	1pcs	1pcs		2pcs 1pcs	1pcs	F	4pcs 16pcs
R	4pcs						

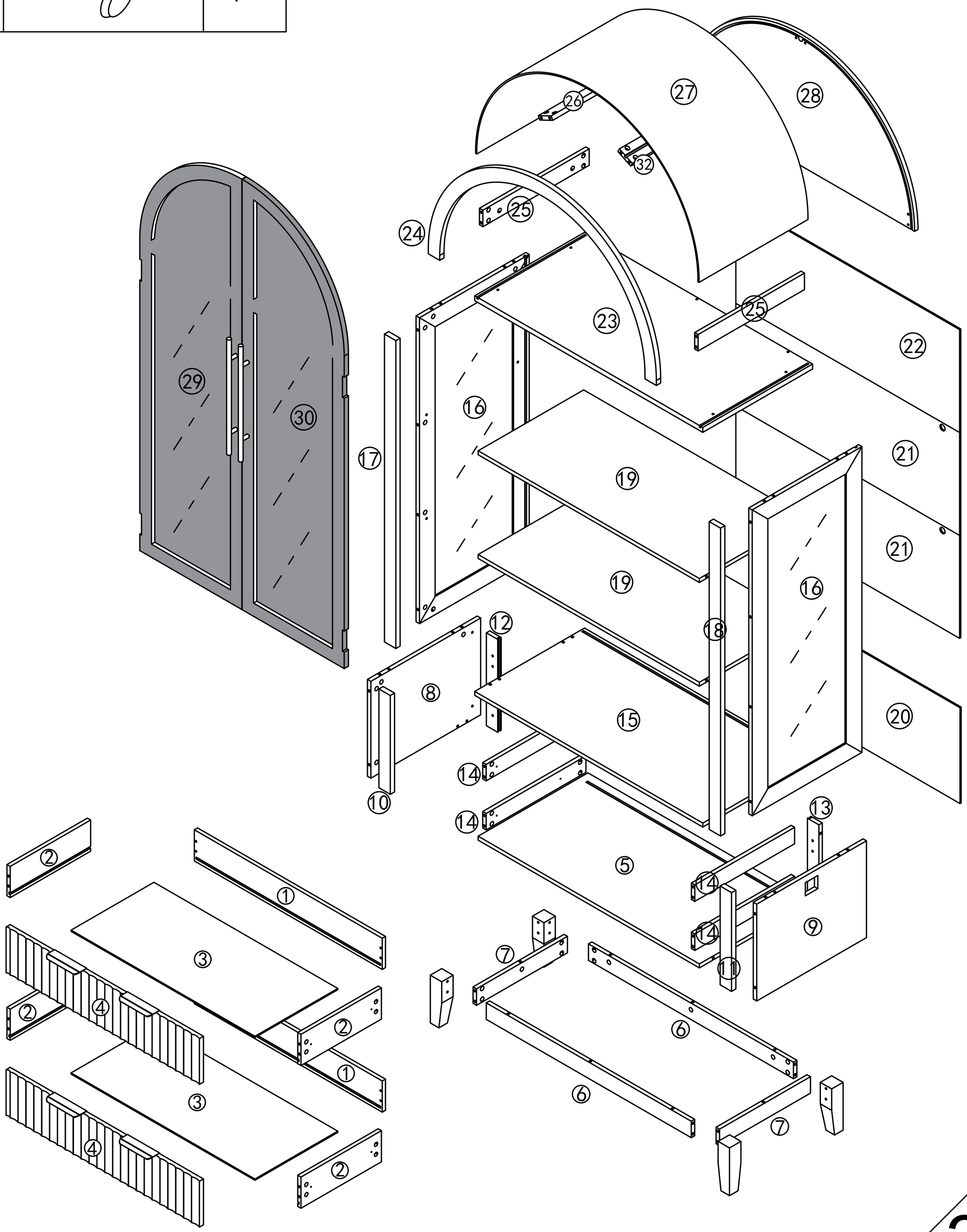

Step 54

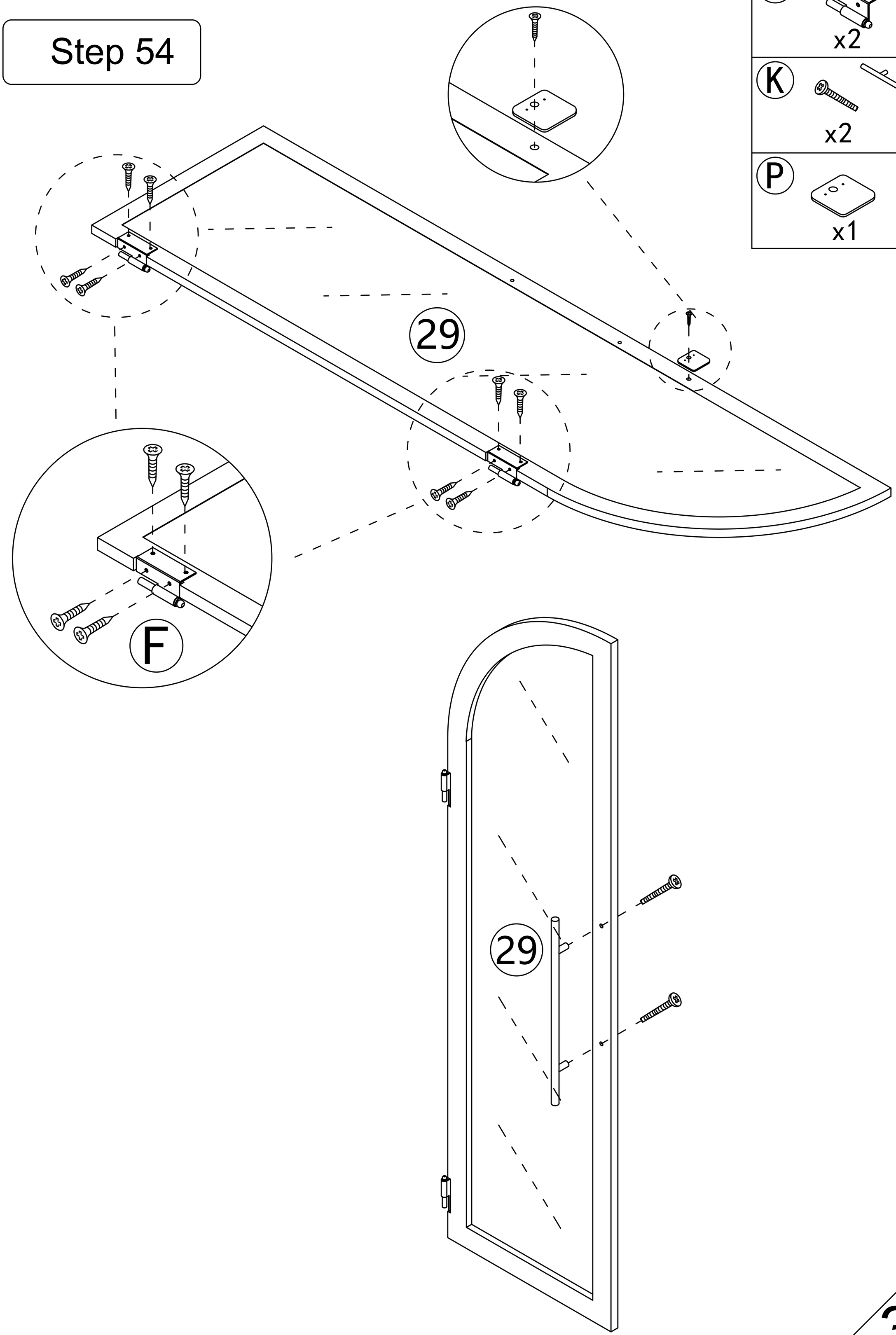

Step 55

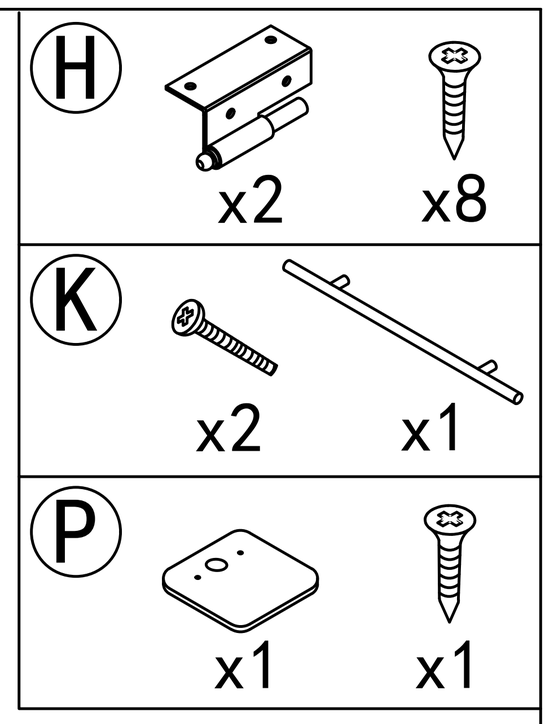

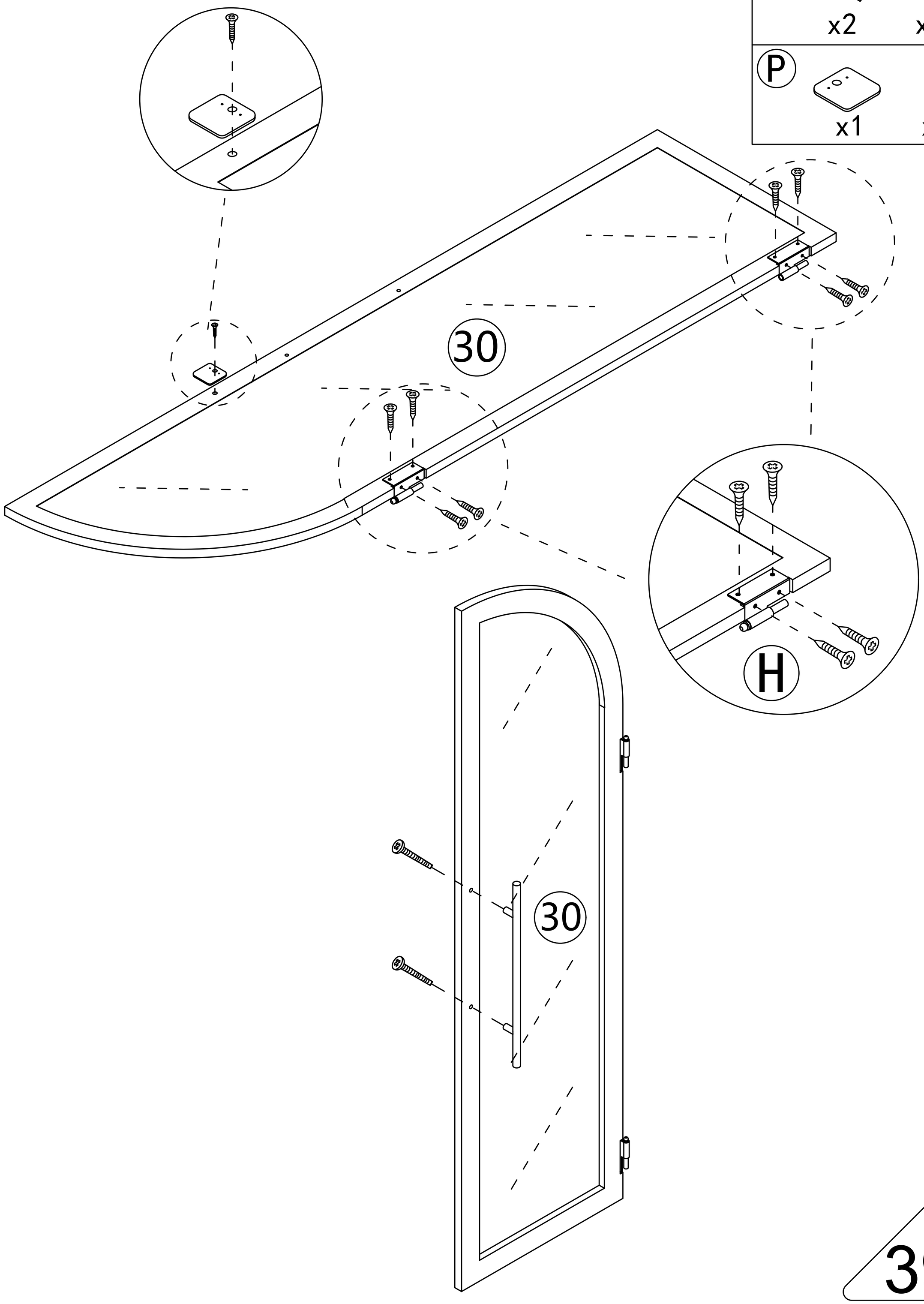

Step 56

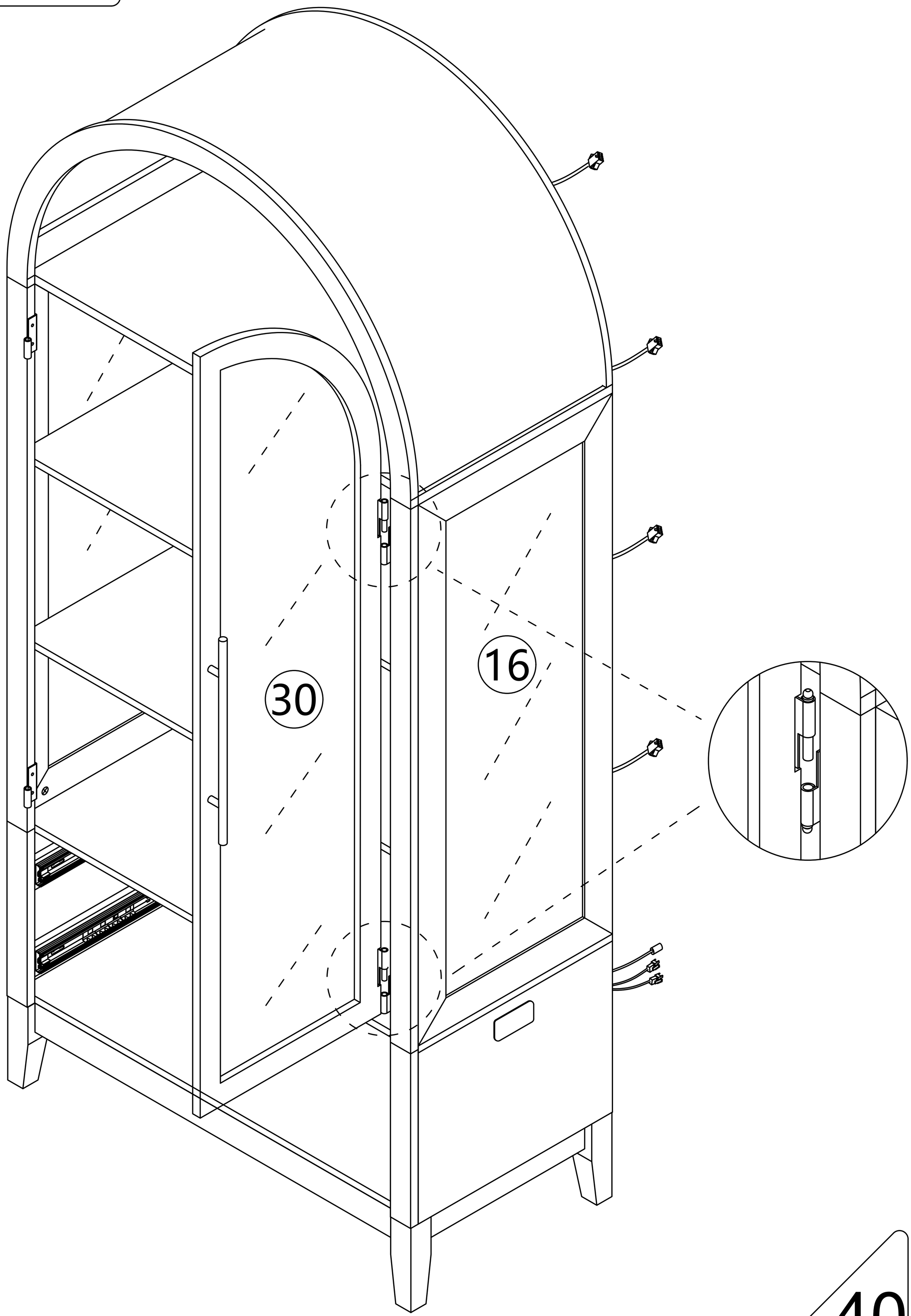

Step 57

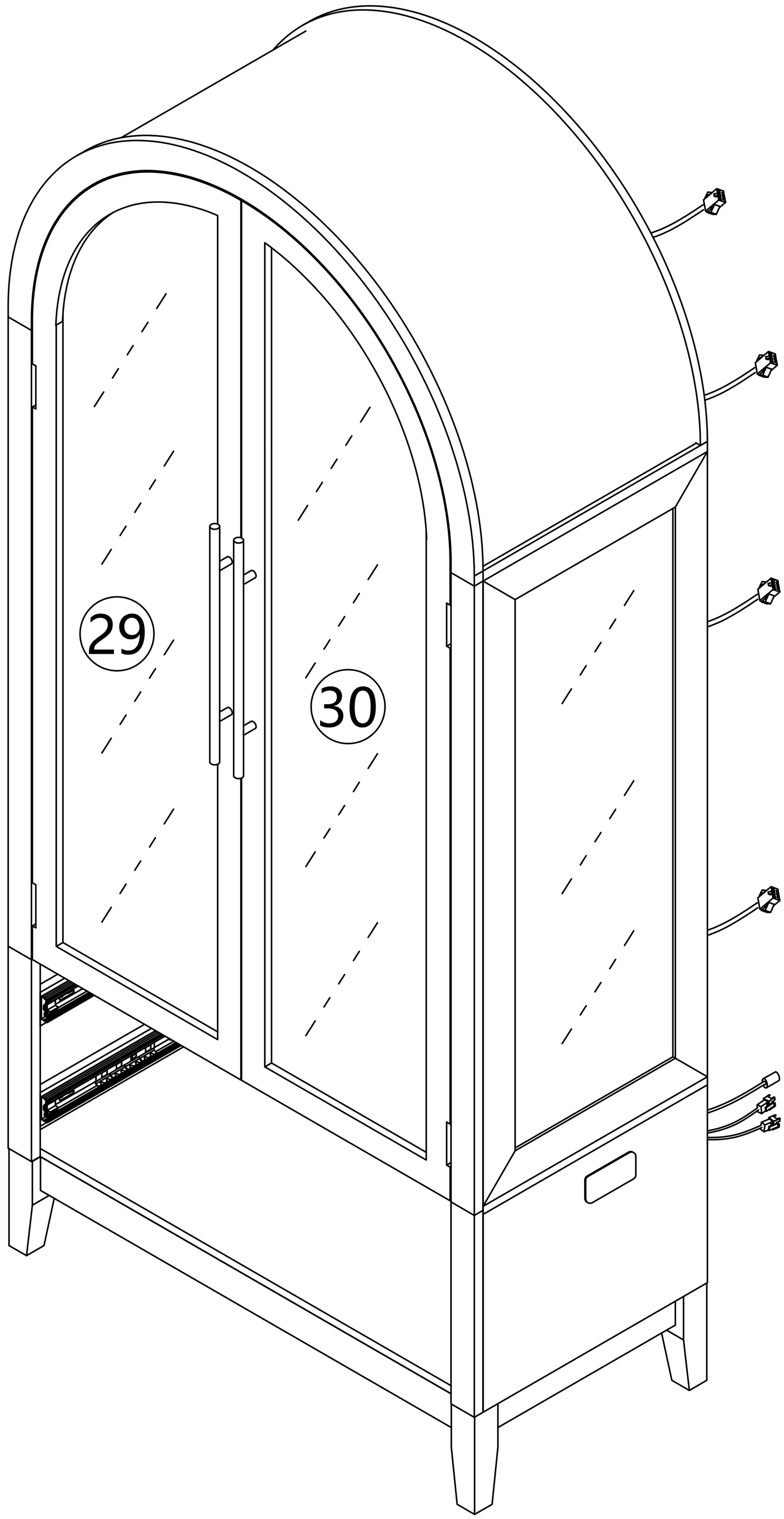

The 29th board is also installed in this way.

Step 58

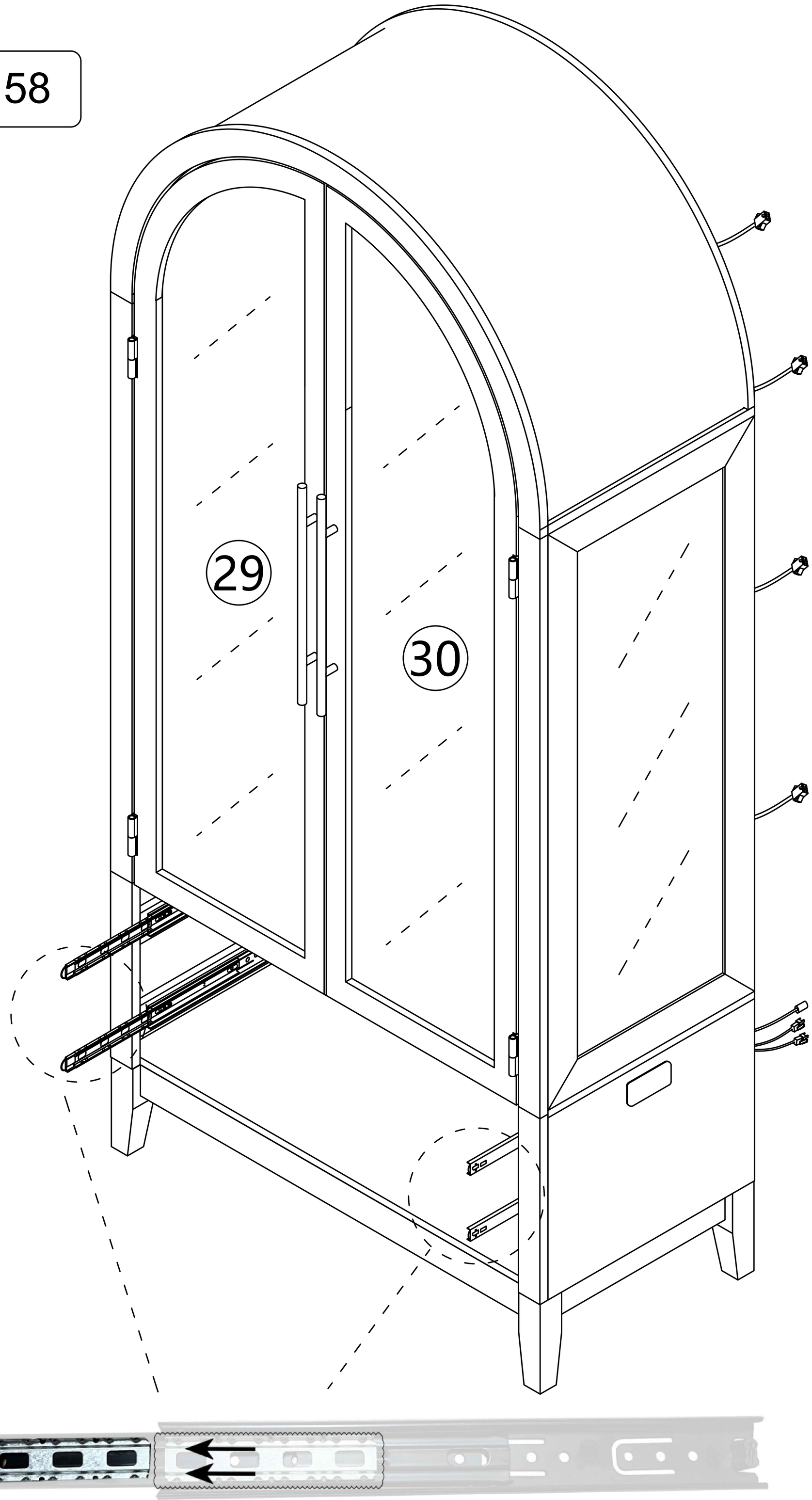

As shown，When installing the drawer,
pull the guide rail out first, Slide beads are also pulled out.

Step 59

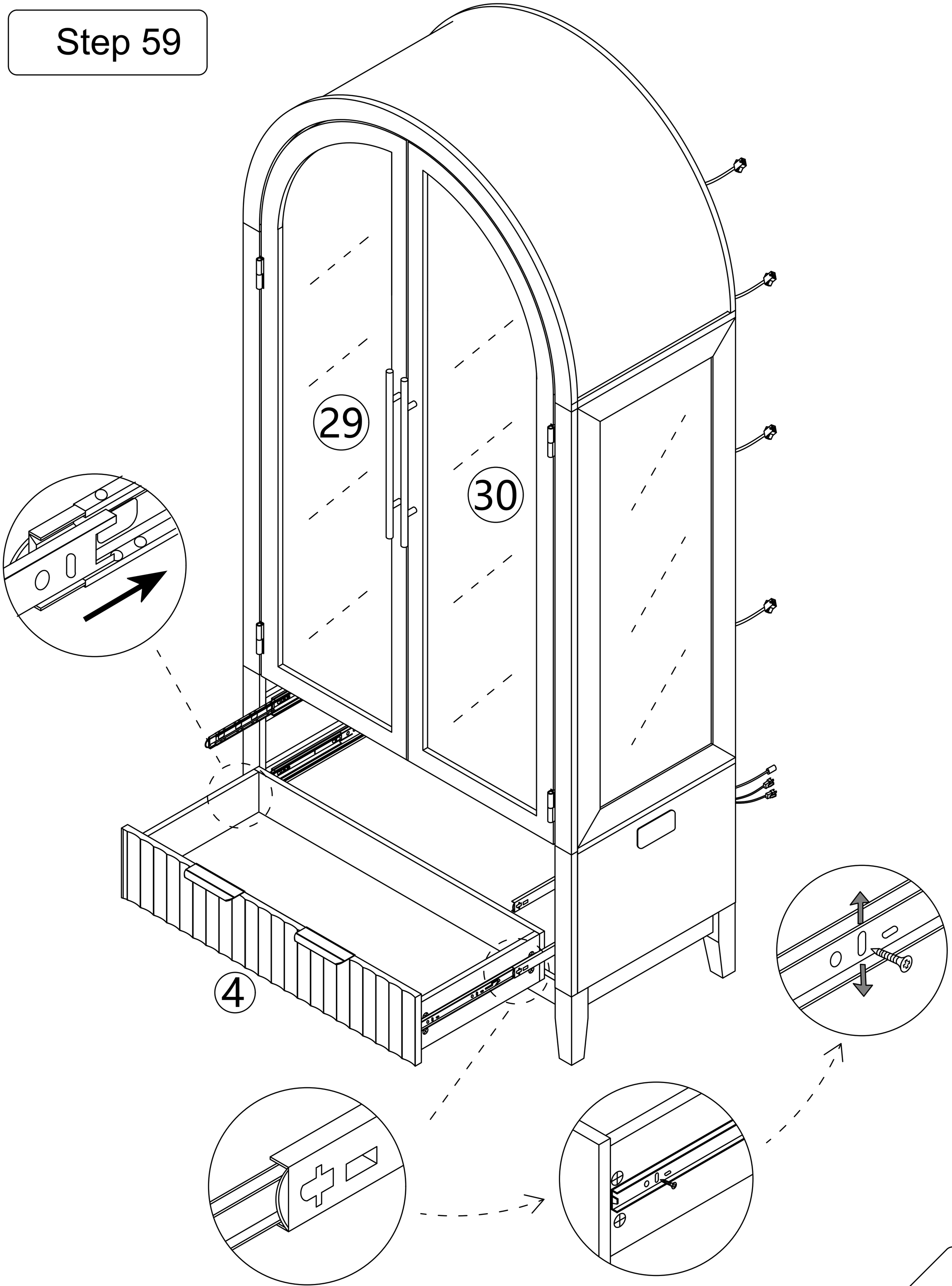

If a large gap is found after installing the drawer the slide rail can be moved up and down to adjust the gap

Step 60

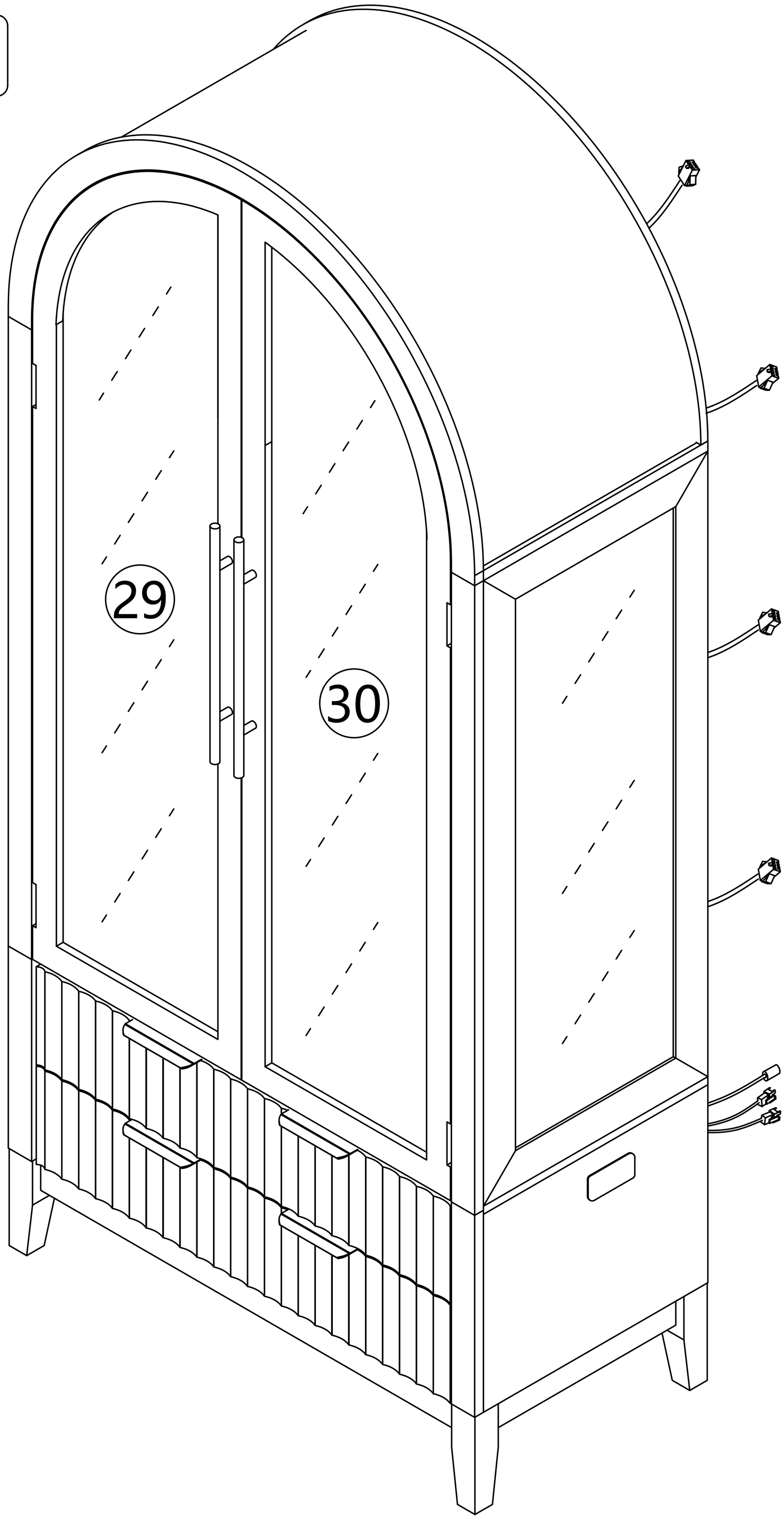

Repeat the drawer installation steps

Step 61

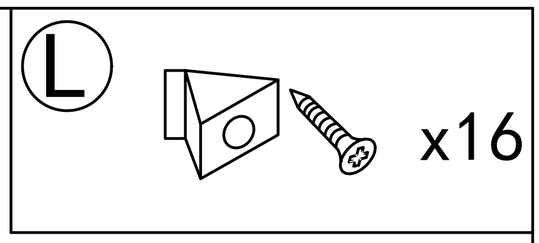

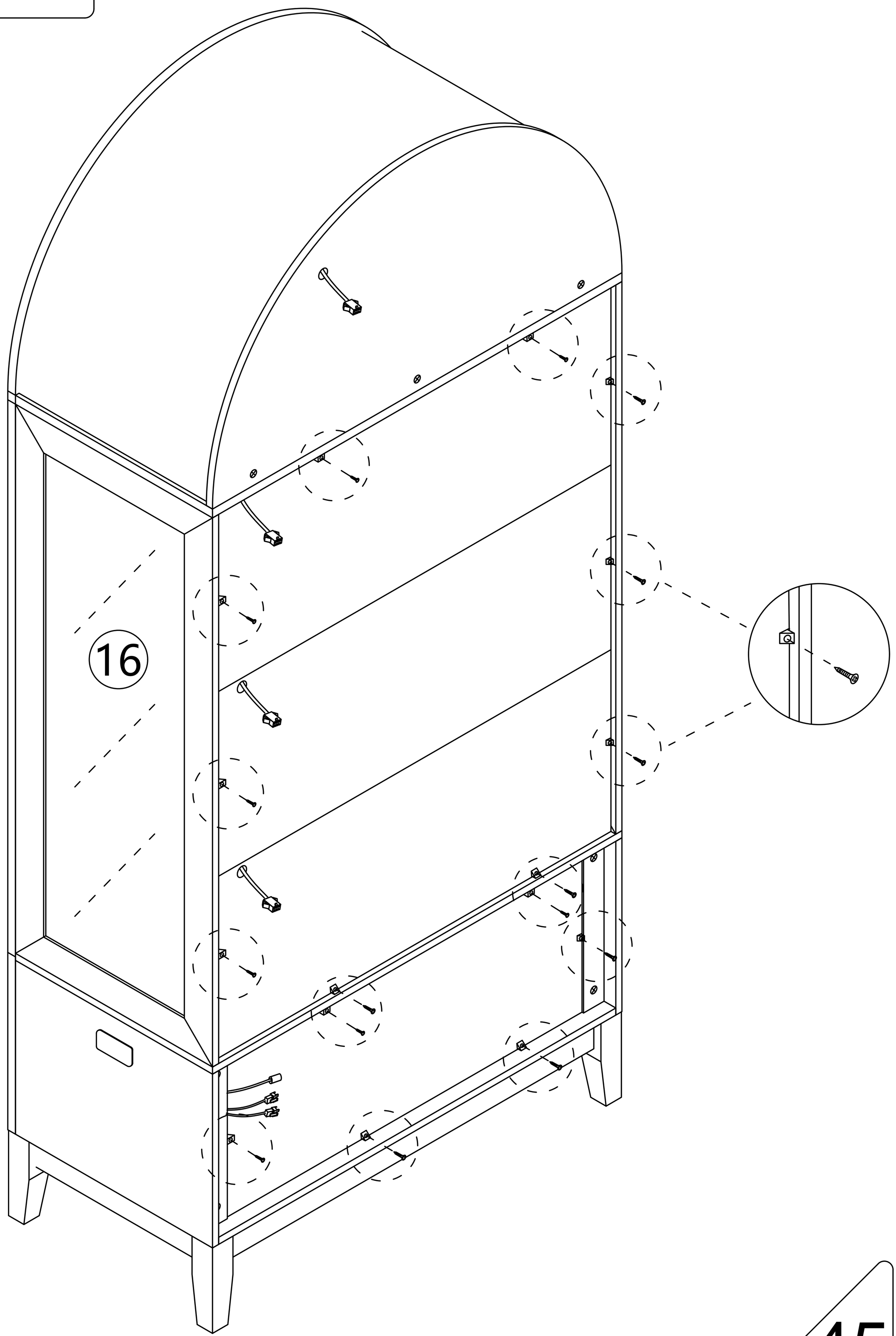

Step 62

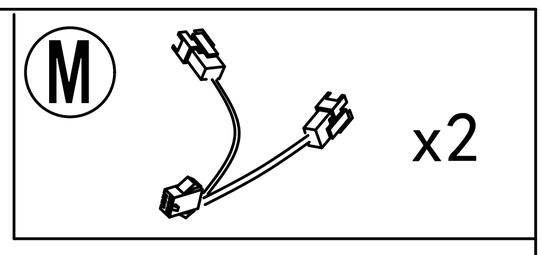

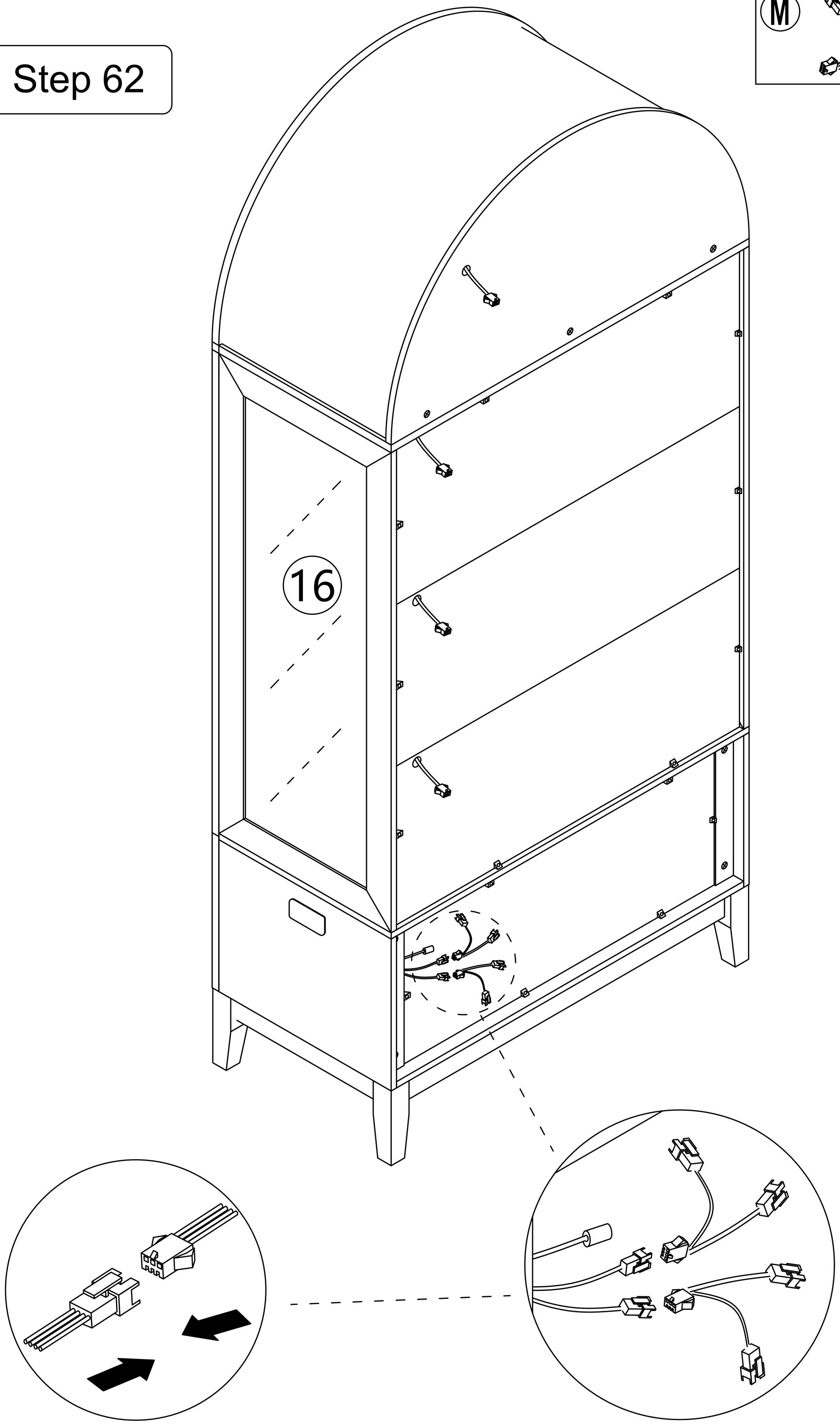

Step 63

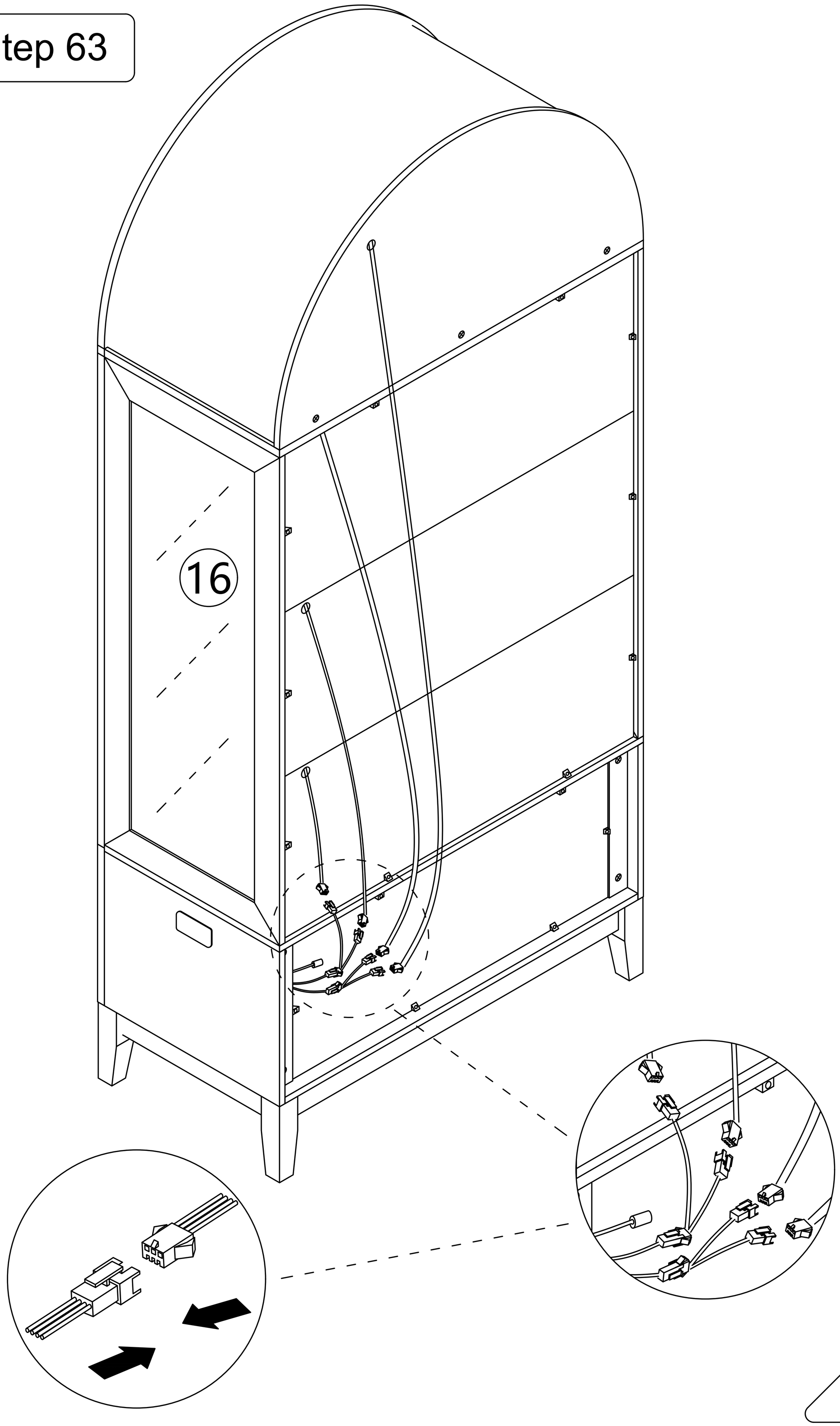

Step 64

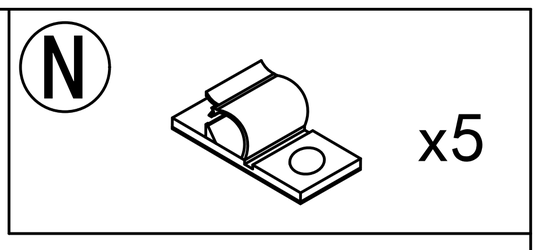

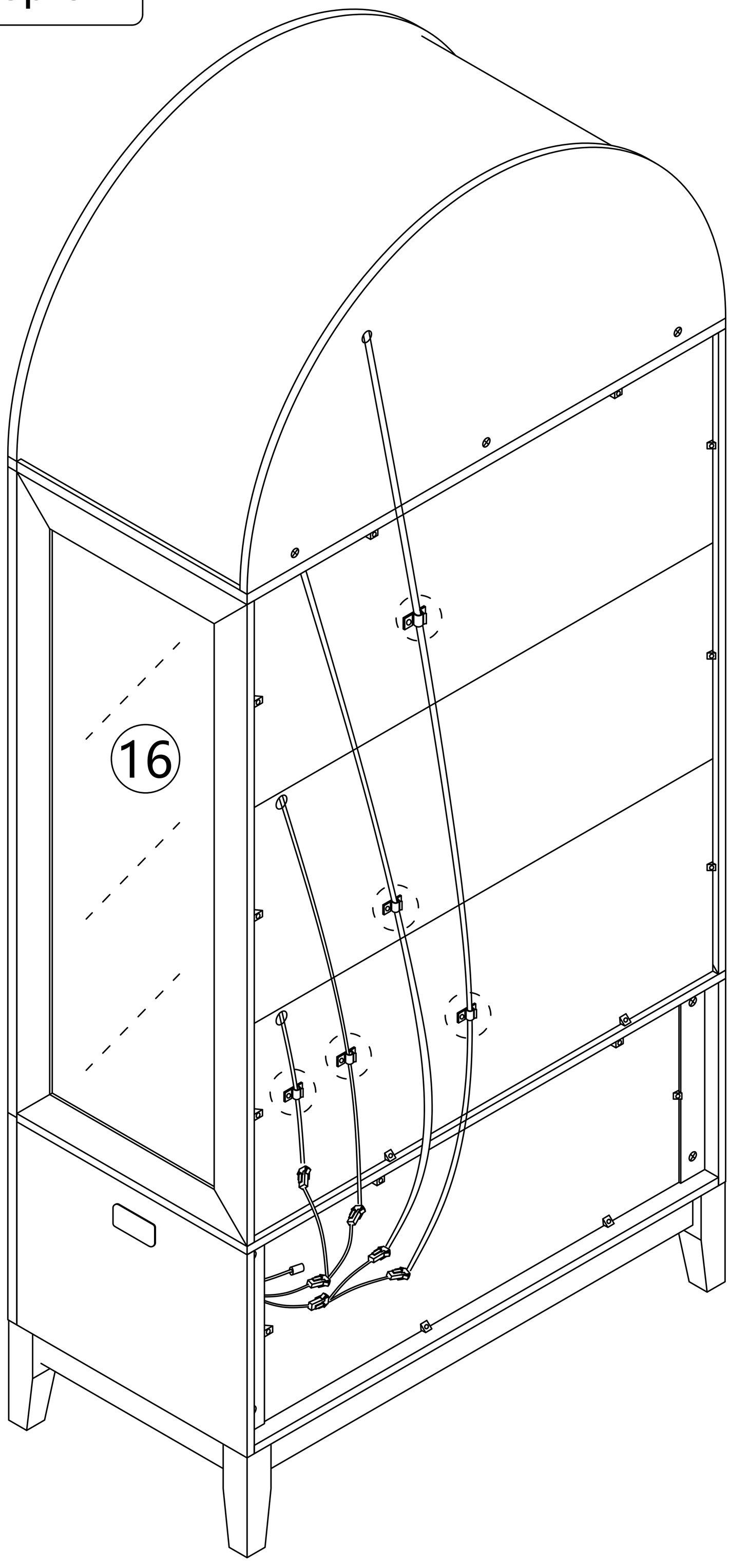

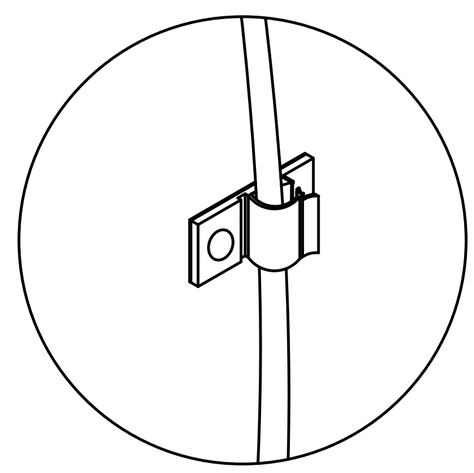

Step 65

Install the anti-rewind tape on the 28 board.

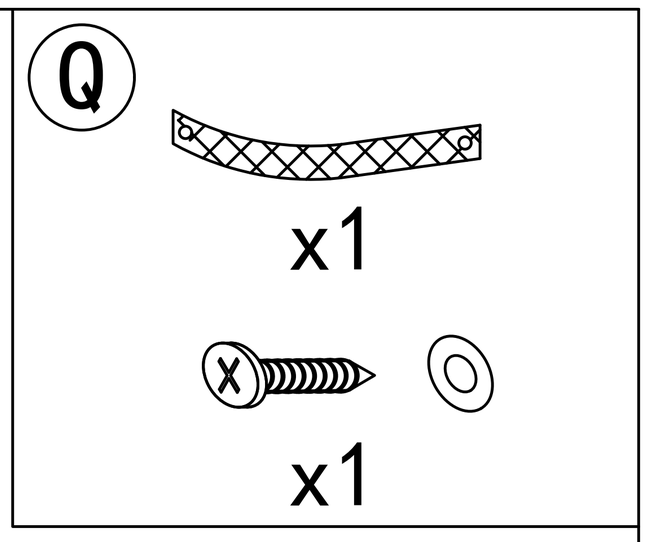

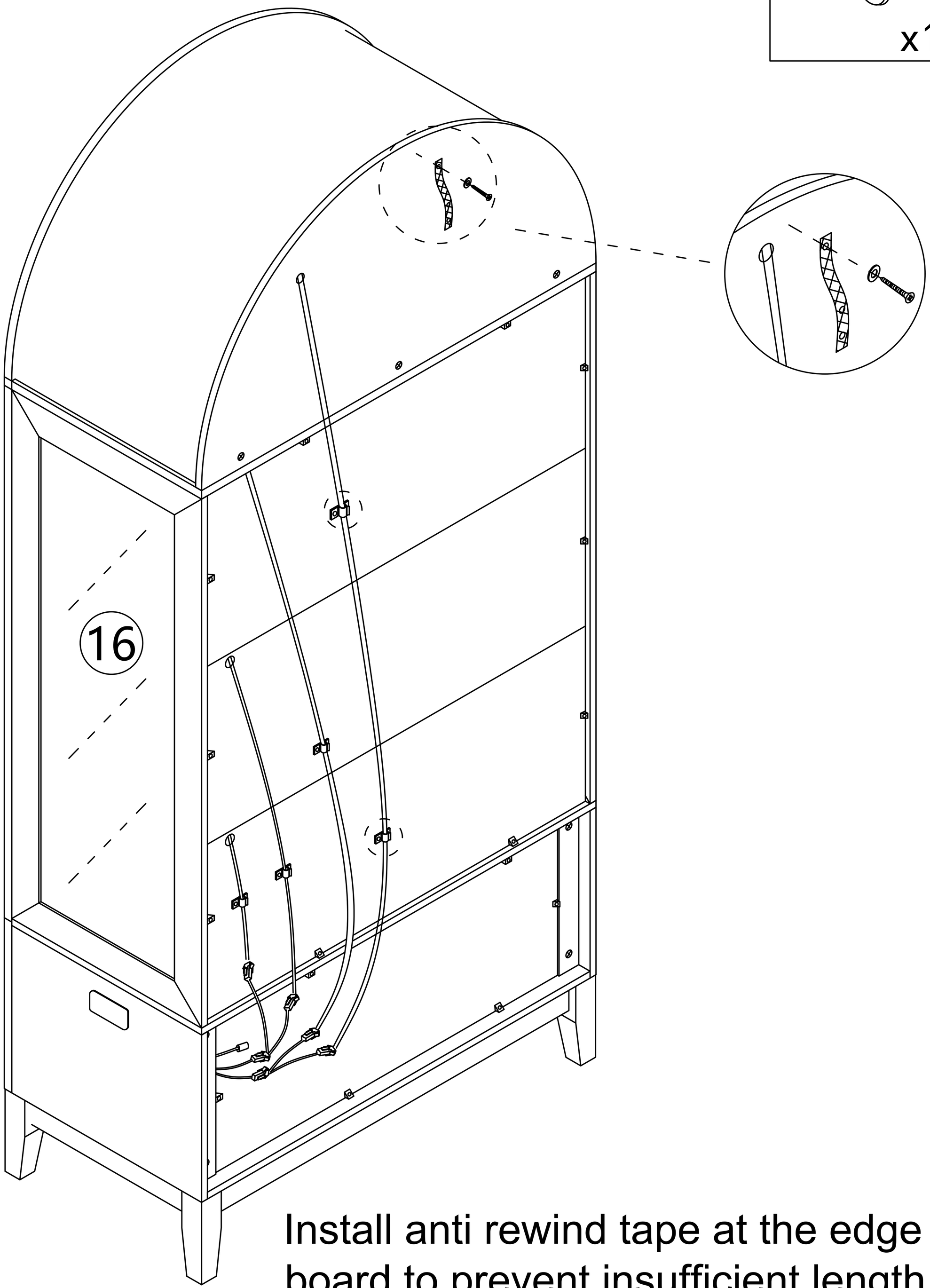

Install anti rewind tape at the edge of the board to prevent insufficient length when connecting to the wall

Step 66

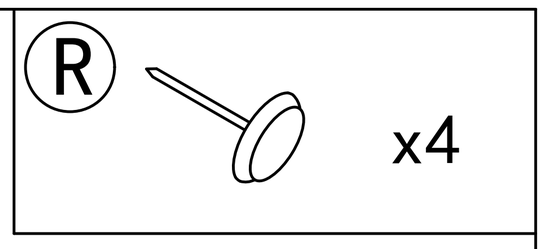

Use a hammer to drive the nail into the gap of the wooden board and fix the back board

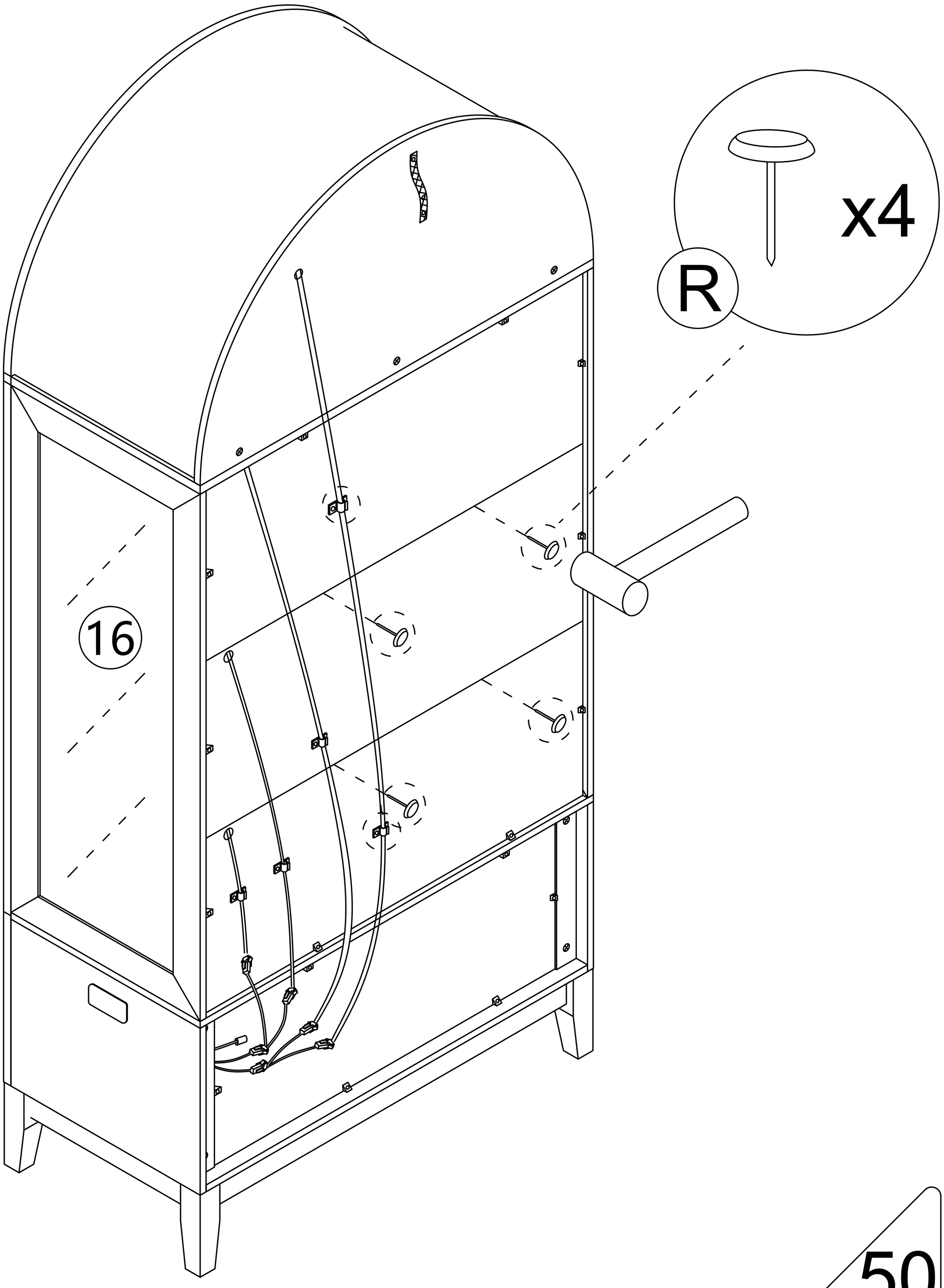

Step 67

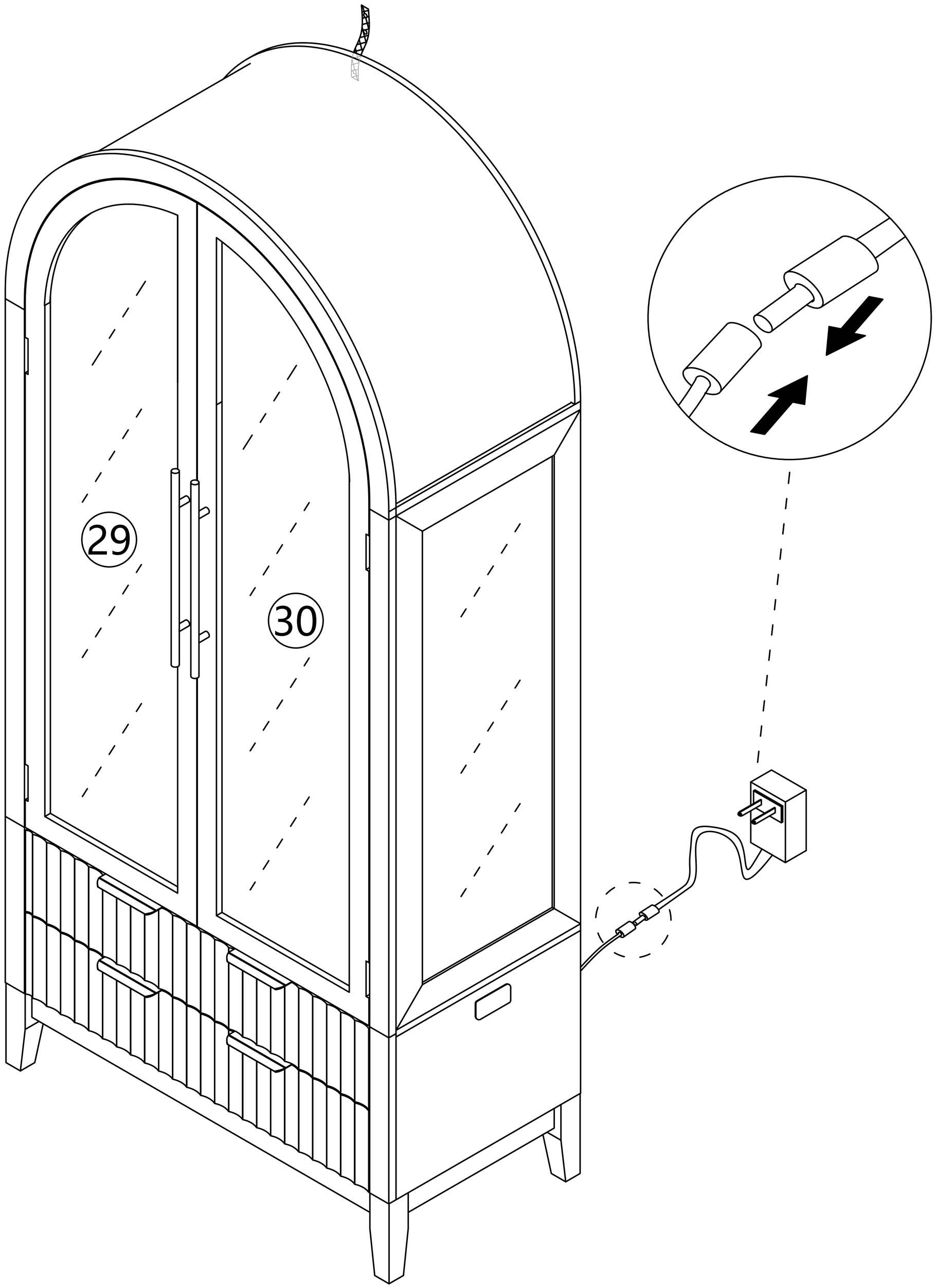

Step 68

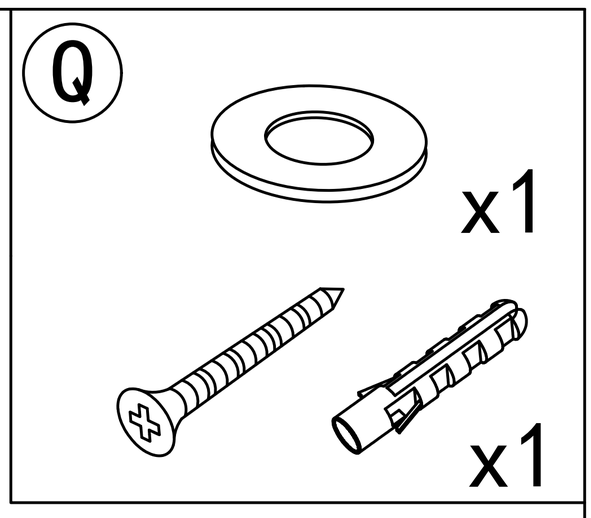

use a ruler to measure theapproximate height of the producton the wall, and then mark it witha pencil.

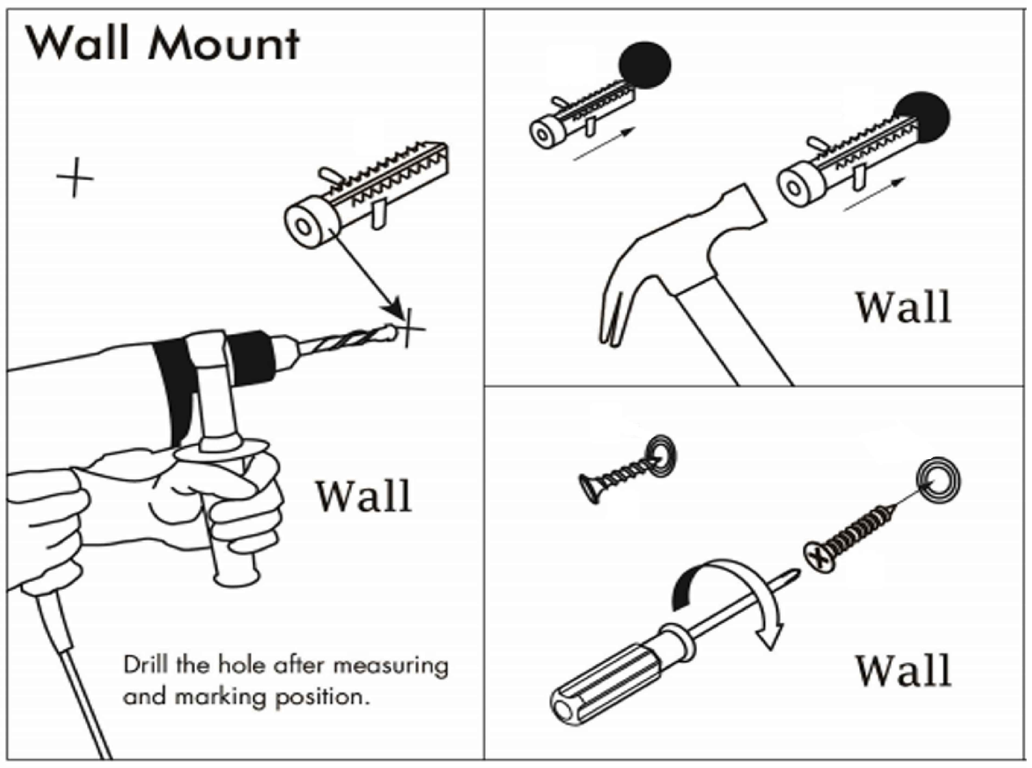

Put the expansion bolt into the hole.

Pass the matching screws throughthe "anti-rewind" and tighten themto fix them on the wall.

Use a tape drill to make holesin the wall that are suitable for theproduct screws.

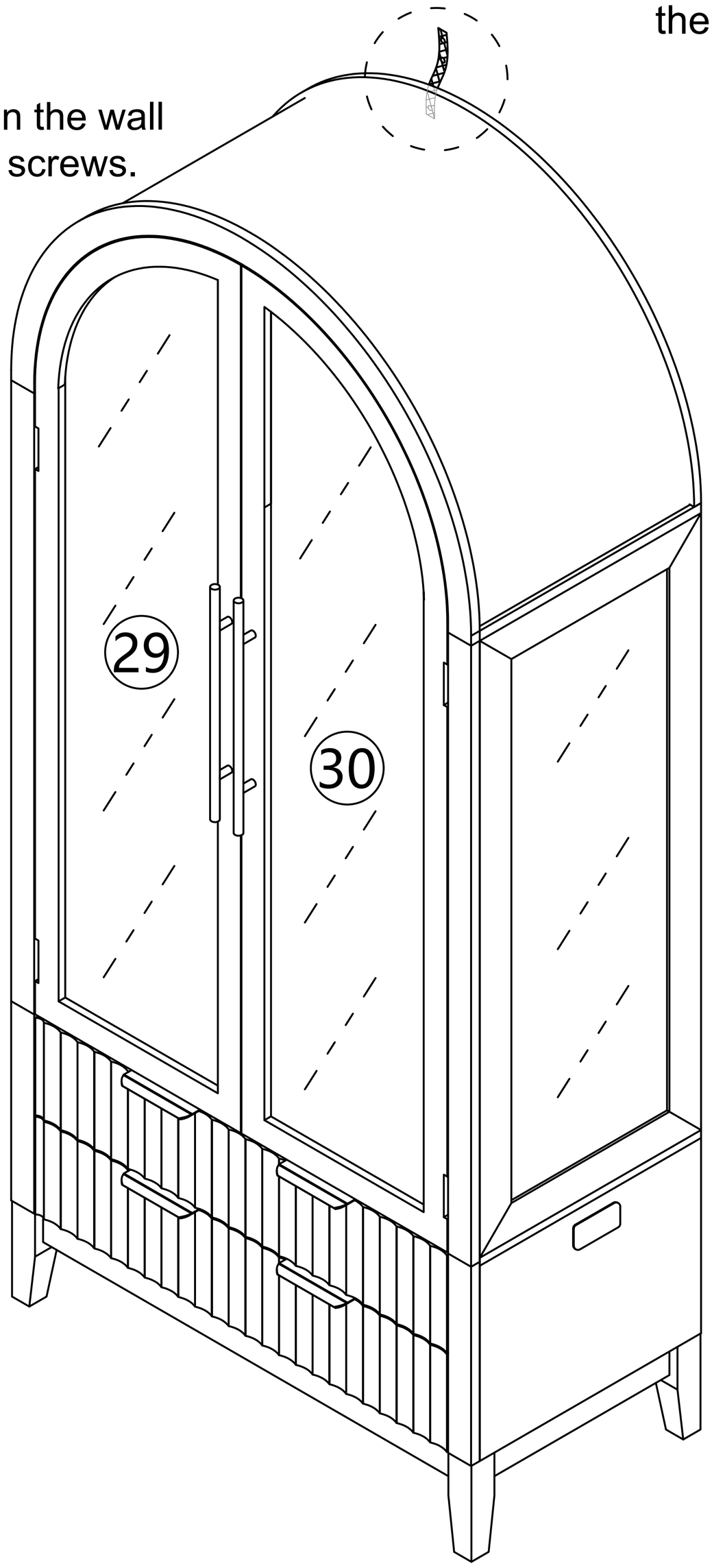

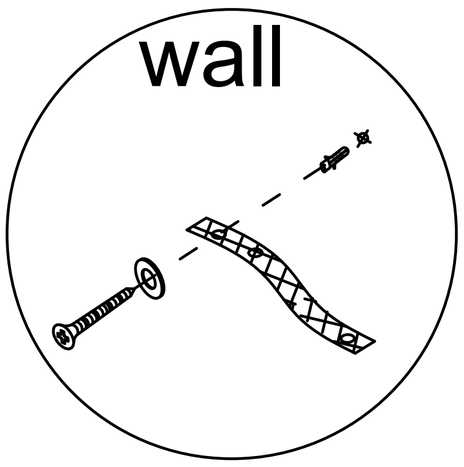

A23

User's Guide

Thank you for purchasing this product.

To use this product, please plug it into a 12V DC power supply.

Please use if the product works normally after connecting to power.

Introduction

The box is an intelligent controller. With 5 touch buttons,

it can turn ON/OFF the light and turn ON/OFF the induction function,

change light colors, and adjust the light luminance.

Operation

This touch button is the master switch of the smart box,

which can turn off all functions of the box and control the light strips on/off operation.

The operation that can be turned on and off with just a light tap.Press and hold to adjust the brightness.

Upon first power-up,the default light will be set to white.

This touch button is used to turn on/off the induction function.

A.touch this button once to turn on the induction function (indicator light on).

After the person leaves or remains stationary for more than 30 seconds, the light strip goes out;

people and objects within a range of 1 meters move will light up the light strip.

B. Long press this button for 0.5 seconds to turn off the human body induction function(the indicator light goes out).

At this point, Keep the light strip as it was before turning off and no longer be affected by humanand object activities.

By default, induction function is enabled when powered on.

This touch button is the Dynamic Phantom Color Mode, which includes 5 magical lighting effects.

Simply tap to cycle through the options.(Attention:This mode cannot adjust the brightness)

This touch button controls the single-color switching function of the light strips,

offering 7 different colors to choose from.

This area controls the color switching function.

You can tap or slide to any color bar position to change the color.

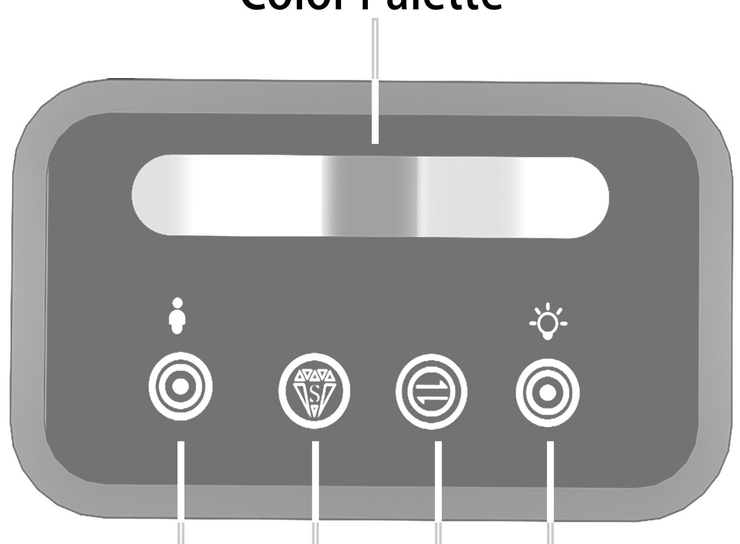

ATTENTION PLEASE

1. If there is no touch response suddenly, Re-plug the power to reset the touch static electricity.
2. If bubbles appear on the panel, remove the protective film.
3. If you have any questions when installing, please feel free to contact us. Thank you.